xylem
Let's Solve Water

Motor Application and Installation Data

GOULDS
WATER TECHNOLOGY
a xylem brand

INDEX

GENERAL INFORMATION

Storage, Frequency of Starts, Temperature Ratings, Flow Sleeve 3-4

4" SUBMERSIBLE MOTOR DATA

Motor and Control Box Cross Reference Data 5
Single-phase 2-wire Data 6-7, 9
Single-phase 3-wire Data 7-9
4" Motor Wire Sizing Charts and Using Two Cable Sizes 10, 12
Three-Phase 4" Motor Data 10-13

6" - 10" MOTOR DATA

Single-phase 6" Motors 13-14
Three-phase 6" - 10" Motors 15-16
Control Box Data for 6" FM Series and CentriPro Single-phase Motors 18-20
75° C Wire Sizing Charts for 6-10" CentriPro Motors 23
FM Series 6" Submersible Motors 22, 24
FM Series 8" Submersible Motors 25 27
75° C Wire Sizing Charts for 6-8" CentriPro FM Series Motors 28, 29

1Ø CONTROL BOXES, 3Ø STARTERS, BALANCED FLOW CONTROLLER

Quick Disconnect 1Ø Control Box - Data, Parts and Wiring 30
Installing a Symcom Insider (Or Pumptec™) in a Control Box 31-32
MC and CSCR 1Ø Control Box - Data, Parts, Check-Out and Wiring 33-37
Pump Troubleshooting 38
Aquavar SOLO^2 Data 39
Aquavar SOLO^2 and Balanced Flow Repair Parts 40
Three-Phase Motor Operation on VFD's 41
Aquavar SOLO^2 (Balanced Flow) Data Troubleshooting 42-46

ELECTRICAL AND GENERAL INFORMATION

Electrical Tests 47-51
Transformer Sizing 52
Three-Phase Unbalance 53
Generator Sizing Chart 54
Cost of Operation, Head and Pressure Equivalents 55
Pressure Switches 56
Tank Selection 56
Common Terms and Formulas 57
Jet Pump Motor Data and Electrical Components 59
Jet Pump Motor Wiring A.O. Smith Motors 60
Friction Loss 61
Agency Listings and Logos 62-63

ADDITIONAL TECHNICAL DATA IN THIS MANUAL

Although this is basically a Motor Manual our experience has proven that proper troubleshooting and motor installation also requires well and pump information. To that end we have added non-typical technical data to this manual to assist you in making informed, thorough troubleshooting and installation decisions. We hope you find these additions helpful.

MOTOR STORAGE

Water lubricated 4" motors are filled with a non-toxic, propylene glycol and water solution to prevent damage from freezing temperatures. We recommend storing 4" motors where temperatures are above 0° F. If stored in colder temperatures (down to -40° F) the fill solution will become slushy, in this case the motor should be allowed to sit in the well for several minutes before operating. If stored in an area where temperatures range from freezing to over 100° F some fill solution may be expelled from the motor. If the leakage appears significant we suggest installing (submerging) the motor for 10 minutes before starting to allow the check valve to do its job and replace the lost fluid.

Six inch and larger motors are protected from freezing to -22° F (-30° C). Checking instructions are in the 6" and Larger Pump IOM.

When removing a used motor from a well it must be protected from freezing as it may have taken on well water and no longer have enough propylene glycol in solution to prevent freezing.

Coolant Leakage — during storage or shipment, it is common for some coolant/fluid to leak from the motors, this should not be a concern. The filtered check valve will refill the motor upon submergence in a well. If leakage appears extraordinary or you are concerned, please call the nearest factory customer service number found on the back cover of this manual for checking instructions.

FREQUENCY OF STARTS

A one (1) minute minimum run cycle for pumps and motors up to 1.5 hp and two (2) minutes for 2 hp and larger motors is recommended. Six inch and larger motors should have a minimum of 15 minutes between starts or starting attempts to allow cooling. Motor, pressure switch, tank and pump life may be extended by limiting starts per hour and per day. Proper tank sizing is critical to control pump cycle times. Excessive or rapid cycling creates heat which can prematurely damage motors, switches and controls.

Motor Starting Frequency		
HP	Single-Phase	Three-Phase
	Starts / 24hr	Starts / 24hr
1/2 thru 3/4	300	300
1 thru 5	100	300
7.5 thru 30	50	100
40 and over	-	100

MOTOR INSTALLATION POSITION

Best service life is obtained when motors are installed in a vertical position. Installing in a horizontal position is allowable. It is best if the shaft end is at least 15° higher than the bottom of the motor. This places some weight on the thrust bearing which helps to prevent thrust bearing coast down wear as the motor slows down. When installed in horizontal installations we recommend keeping starts to a minimum and maintaining back pressure (head) on the system. Even when installed vertically, operating pumps at open discharge with little or no head (to the far right of the pump curve) may create excessive upward thrust which may damage the motor's upthrust bearing and internal pump parts – in applications with high static water levels or little system head always use a throttling valve in the discharge line to create back pressure (head) on the pump and bearing. For 4" submersibles 5' minimum is required and for 6" submersibles 10' submergence is required.

CONTROL BOX MOUNTING

Single-phase submersible control boxes feature NEMA 3R enclosures for indoor or outdoor mounting. They should be mounted in a vertical position as relay manufacturers recommend correct relay positioning for proper, trouble-free operation.

Control boxes should be shaded from direct sunlight in areas where temperatures exceed 90° F as excessive heat may shorten capacitor life. It is advisable to paint the enclosure white if outside in very hot, sunny climates.

MOTOR COOLING, TEMPERATURE AND TIME RATINGS

All 4 inch GWT motors may be operated continuously in water up to 86° F. Optimum service life will be attained by maintaining a minimum flow rate past the motor of .25 feet per second. Use a flow sleeve if velocity is below the .25'/sec, if the well is top feeding or when the pump is used in a large body of water or large tank.

Six (6) inch canned design motors from 5 – 40 hp will operate in water up to 95° F (35° C), without any de-rating of horsepower, with a minimum flow rate of .5 ft./sec. past the motor. 6" – 50 hp and all 8" – 10" motors can operate in 77° F (25° C) water with .5'/sec velocity past the motor.

All 6" - 8" FM Series motors from 5 – 150 hp will operate in water up to 95° F (35° C), without any de-rating of horsepower, with a minimum flow rate of .5ft/sec velocity past the motor.

	6" CP Motor	8" CP Motor	6" FM Motor	8" FM Motor
Maximum Water Temperature	35°C ≈ 95°F (5 - 40HP) 25°C ≈ 77°F (50 HP)	25°C ≈ 77°F (50 - 150 HP)	35°C ≈ 95°F (5 - 50 HP)	35°C ≈ 95°F (50 - 150 HP)
S.F.	1.15	1.15	1.15	1.15
Minimum Flow	0.5 ft/s	0.5 ft/s	0.5 ft/s	0.5 ft/s

One way to make a flow sleeve is to install a well seal above the pump discharge and slip a piece of casing over the pump and affix it to the well seal. Drill three holes at 120° intervals on the lower section of the casing and insert (3) screws and nuts through the casing, just touching the motor. Tighten the nuts out against the casing. Insure that the screws do not protrude out too far as you don't want them catching on well joints.

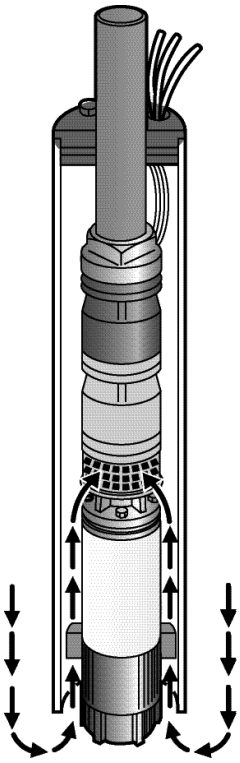

FLOW SLEEVE

PUMP COOLING AND LUBRICATION

In addition to motor cooling, another reason to maintain minimum flow rates is pump lubrication. All manufacturers', either on curves or in selection charts, show minimum flows. This insures that rotating pump parts are properly lubricated to prolong service life and reduce friction. A dead headed pump will super heat water very quickly, and hot water has no lubricity.

MINIMUM FLOW RATES FOR PROPER MOTOR COOLING

Well or Sleeve Diameter (inches)	3.75" Diameter 4" CP Motor 0.25'/sec	CP = 5.5" Dia. 6" CP Motor 0.5'/sec.	CP = 7.5" Dia. 8" CP Motor 0.5'/sec.	FM = 5.43" Dia. 6" FM Motor 0.5'/sec.	FM = 7.70" Dia. 8" FM Motor 0.5'/sec.
	GPM Required				
4	1.2	–	–	–	–
5	7	–	–	–	–
6	13	7	–	9	–
7	20	23	–	25	–
8	30	41	9	45	10
10	50	85	53	90	55
12	80	139	107	140	110
14	110	198	170	200	170
16	150	276	313	280	245

Multiply gpm by .2271 for m^3/Hr. Multiply gpm by 3.785 for l/min.

RECOMMENDED MAXIMUM FLOW RATE IN GPM

Motor Diameter	Well Casing or Flow Sleeve Diameter						
	4"	6"	8"	10"	12"	14"	16"
4"	25	269	–	–	–	–	–
6"	–	77	395	830	1328	1679	2303
8"	–	--	84	519	1017	1368	1992

CROSS REFERENCE

CONTROL BOX CROSS REFERENCE

			New Control Box #'s	=	Old Model Numbers			
Control Box Type	HP	Volts	Goulds Water Technology Brand		Replaces F. E. Control Box	Replaces Goulds CB	Replaces Red Jacket	
							RJ CB	RJ - FE
QD	0.5	115	CB05411	New models « Left will replace all old model numbers to the Right »	2801044915	00043 (G)	-	50F301CB
	0.5	230	CB05412		2801054902	00044 (G)	-	50F311CB
	0.75	230	CB07412		2801074915	00054 (G)	-	75F311CB
	1	230	CB10412		2801084915	00064 (G)	-	100F311CB
CSCR or Integral	0.5	230	CB05412CR		2824055015	00044CR	S50N1CB	-
	0.75	230	CB07412CR		2824075015	00054CR	S75N1CB	-
	1	230	CB10412CR		2824085015	00064CR	S100N1CB	-
	1.5	230	CB15412CR		2823008110	00074	S150N1CB	150F311CB
	2	230	CB20412CR		2823018310	00084	S200N1CB	200F311CB
	3	230	CB30412CR		2823028110	00094	S300N1CB	300F311CB
	5	230	CB50412CR		2821138110	00104	S500N1CB	500F311CB
MC or Deluxe	1.5	230	CB15412MC		Not Available Before			
	2	230	CB20412MC		2823018310	00084MC	S200N1CBC	200F311CBC
	3	230	CB30412MC		2823028310	00094MC	S300N1CBC	300F311CBC
	5	230	CB50412MC		2821139310	00104MC	S500N1CBC	500F311CBC

MOTOR CROSS REFERENCE

Motor Type	HP	Volts	GWT Order No.	Old GWT #	Red Jacket Order No.	Old RJ #	F.E. #
2-wire	0.5	115	M05421	S04932	50C201	50F201	244504
	0.5	230	M05422	S04942	50C211	50F211	244505
	0.75	230	M07422	S05942	75C211	75F211	244507
	1	230	M10422	S06942	100C211	100F211	244508
	1.5	230	M15422	S07942	150C211	150F211	244309
3-wire	0.5	115	M05411	S04930	50C301	50F301	214505
	0.5	230	M05412	S04940	50C311	50F311	214505
	0.75	230	M07412	S05940	75C311	75F311	214507
	1	230	M10412	S06940	100C311	100F311	214508
	1.5	230	M15412	S07940	150C311	150F311	224300
	2	230	M20412	S08940	200C311	200F311	224301
	3	230	M30412	S09940	300C311	300F311	22430226
	3	230	N/R	S09940HT	N/R	300F311HT	22430252
	5	230	M50412	S10940	500C311	500F311	224303

SINGLE-PHASE

Generation I Single-Phase

2-WIRE PSC, SINGLE-PHASE 4" MOTORS - ELECTRICAL DATA, 60 HZ, 3450 RPM

							Full Load		Service Factor		Locked Rotor Amps	Winding Resistance
Type	Model	RJ Ref. #	HP	KW	Volts	SF	Amps	Watts	Amps	Watts		
2-Wire (PSC)	M05421	50C201	0.5	0.37	115	1.6	7.4	845	9.5	1088	36.4	1.3-1.8
	M05422	50C211	0.5	0.37	230	1.6	3.7	834	4.7	1073	19.5	4.5-5.2
	M07422	75C211	0.75	0.55	230	1.5	5.0	1130	6.4	1459	24.8	3.0-4.8
	M10422	100C211	1.0	0.75	230	1.4	7.9	1679	9.1	1990	21.7	4.2-5.2
	M15422	150C211	1.5	1.1	230	1.3	9.2	2108	11.0	2520	42.0	1.9-2.3

2-WIRE, SINGLE-PHASE 4" MOTORS - ENGINEERING DATA

				Efficiency %		Power Factor %		Thrust Rating	KVA Code	Standard Fuse	Dual Element Time Delay Fuse	Circuit Breaker
Type	Model	HP	Volts	F.L.	S.F.	F.L.	S.F.					
2-Wire (PSC)	M05421	0.5	115	49	61	99	99	700 #	K	25	15	20
	M05422	0.5	230	50	62	97	99		K	15	10	10
	M07422	0.75	230	55	65	97	99		J	20	10	15
	M10422	1.0	230	58	65	94	96		F	25	15	20
	M15422	1.5	230	59	64	99	99		H	30	15	25

3-WIRE, SINGLE-PHASE 4" MOTORS - ELECTRICAL DATA, 60 HZ, 3450 RPM

							Full Load		Service Factor		Locked Rotor Amps	Winding Resistance		Standard Control Box	Deluxe Control Box (Mag Contactor)
Type	Model	RJ Ref. #	HP	KW	Volts	SF	Amps	Watts	Amps	Watts		Main (B-Y or B-B)	Start (R-Y)		
3-Wire (CSIR) PREMIUM	M05411	50C301	0.5	0.37	115	1.6	Y-11.0 B-11.0 R-0	733	Y-12.6 B-12.6 R-0	1021	49.6	0.9 - 1.6	5.7 - 7.0	CB05411	-
	M05412	50C311	0.5	0.37	230	1.6	Y-5.5 B-5.5 R-0	745	Y-6.3 B-6.3 R-0	1033	22.3	4.2 - 4.9	17.4 - 18.7	CB05412	-
	M07412	75C311	0.75	0.55		1.5	Y-7.2 B-7.2 R-0	1014	Y-8.3 B-8.3 R-0	1381	32.0	2.6 - 3.6	11.8 - 13.0	CB07412	-
	M10412	100C311	1.0	0.75		1.4	Y-8.4 B-8.4 R-0	1267	Y-9.7 B-9.7 R-0	1672	41.2	2.2 - 3.2	11.3 - 12.3	CB10412	-
3-Wire (CSCR) PREMIUM	M05412	50C311	0.5	0.37		1.6	Y-4.1 B-4.1 R-2.2	720	Y-4.9 B-4.4 R-2.1	955	22.3	4.2 - 4.9	17.4 - 18.7	CB05412CR	-
	M07412	75C311	0.75	0.55		1.5	Y-5.1 B-5.0 R-3.2	1000	Y-6.3 B-5.6 R-3.1	1300	32.0	2.6 - 3.6	11.8 - 13.0	CB07412CR	-
	M10412	100C311	1.0	0.75		1.4	Y-6.1 B-5.7 R-3.3	1205	Y-7.2 B-6.3 R-3.3	1530	41.2	2.2 - 3.2	11.3 - 12.3	CB10412CR	-
	M15412	150C311	1.5	1.1		1.3	Y-9.7 B-9.5 R-1.4	1693	Y-11.1 B-11.0 R-1.3	2187	47.8	1.6 - 2.3	7.9 - 8.7	CB15412CR	CB15412MC
	M20412	200C311	2.0	1.5		1.25	Y-9.9 B-9.1 R-2.6	2170	Y-12.2 B-11.7 R-2.6	2660	49.4	1.6 - 2.2	10.8 - 12.0	CB20412CR	CB20412MC
	M30412	300C311	3.0	2.2		1.15	Y-14.3 B-12.0 R-5.7	3170	Y-16.5 B-13.9 R-5.6	3620	76.4	1.1 - 1.4	2.0 - 2.5	CB30412CR	CB30412MC
	M50412	500C311	5.0	3.7		1.15	Y-24.0 B-19.1 R-10.2	5300	Y-27.0 B-22.0 R-10.0	6030	101.0	0.62 - 0.76	1.36 - 1.66	CB50412CR	CB50412MC

SINGLE-PHASE

Generation I Single-Phase

3-WIRE, SINGLE-PHASE 4" MOTORS - ENGINEERING DATA

Type	Model	HP	Volts	Efficiency % F.L.	Efficiency % S.F.	Power Factor % F.L.	Power Factor % S.F.	Thrust Rating	KVA Code
3-Wire	M05411	0.5	115	51	59	54	69	700 #	N
	M05412	0.5	230	50	58	58	71		M
	M07412	0.75		55	61	61	72		L
	M10412	1.0		59	62	66	75		L
	M15412	1.5		66	67	80	86		J
	M20412	2		68	69	96	95	900 #	G
	M30412	3		72	72	96	97		G
	M50412	5		71	71	97	98	1500 #	E

Generation II Single-Phase (Released April 2011)

2-WIRE MOTORS Identified by a - 01 Nameplate Order No. Suffix

As part of Faradyne Motors' continual improvement process, 3-Wire Generation II motors were introduced in April 2011. Pump model numbers and motor order numbers remained unchanged. The Motor Nameplate will have a new Faradyne part number and the Goulds part number on the Motor Nameplate will have a - 01 suffix, example M05422 will be M05422 - 01, only on the Motor Nameplate not in our catalog or price book.

The self-stick, Mylar motor data stickers we pack with 2 wire motors and complete pumps will be updated with the new electrical data so that installers will know which motor is installed in the well should service work ever be necessary. Note that the motor data is only needed to troubleshoot a motor in the well, i.e. resistance and amperage ratings or when installing a variable speed drive system to set the overloads.

2-WIRE, 4" SINGLE-PHASE ELECTRICAL DATA, 60 HZ, 3450 RPM

Type	Model	RJ Ref. #	Rating HP	Rating KW	Rating Volts	Rating SF	Full Load Amps (B or Y/B/R)	Full Load Watts	Service Factor Amps (B or Y/B/R)	Service Factor Watts	Locked Rotor Amps	Winding Resistance Main (B-Y or B-B)	Winding Resistance Start (R-Y)
2-Wire (PSC)	M05421	50C201	0.5	0.37	115	1.6	7.9	910	9.8	1120	28	1.4-2.0	–
	M05422	50C211	0.5	0.37	230	1.6	4.0	845	4.7	1050	16	6.1-7.2	–
	M07422	75C211	0.75	0.55	230	1.5	5.0	1130	6.2	1400	18	5.9-6.9	–
	M10422	100C211	1.0	0.75	230	1.4	6.7	1500	8.1	1800	24	4.2-5.2	–
	M15422	150C211	1.5	1.1	230	1.3	9.0	2000	10.4	2350	43	1.8-2.4	–

2-WIRE, 4" SINGLE-PHASE ENGINEERING DATA

Type	Model	HP	Volts	Efficiency % F.L.	Efficiency % S.F.	Power Factor % F.L.	Power Factor % S.F.	Thrust Rating	KVA Code	Standard Fuse	Dual Element Time Delay Fuse	Circuit Breaker
2-Wire (PSC)	M05421	0.5	115	42%	54%	99%	99%	700 #	H	25	15	20
	M05422	0.5	230	45%	59%	92%	97%		J	15	10	10
	M07422	0.75	230	51%	61%	98%	98%		F	15	10	15
	M10422	1.0	230	50%	59%	98%	98%		F	20	15	20
	M15422	1.5	230	57%	63%	98%	99%		H	30	15	25

SINGLE-PHASE

Generation II Single-Phase (Released April 2011)

3-WIRE, SINGLE-PHASE 4" MOTORS - ELECTRICAL DATA, 60 HZ, 3450 RPM

							Full Load		Service Factor		Locked Rotor Amps	Winding Resistance		Standard Control Box	Deluxe Control Box (Mag Contactor)
Type	Model	RJ Ref. #	HP	KW	Volts	SF	Amps	Watts	Amps	Watts		Main (B-Y or B-B)	Start (R-Y)		
3-Wire (CSIR) PREMIUM	M05411	50C301	0.5	0.37	115	1.6	Y - 8.8 B - 8.8 R - 0	675	Y - 10.9 B - 10.9 R - 0	980	44	1.0 - 1.4	2.5 - 3.1	CB05411	-
	M05412	50C311	0.5	0.37	230	1.6	Y - 5.3 B - 5.3 R - 0	740	Y - 6.1 B - 6.1 R - 0	1050	21	5.1 - 6.1	12.4 - 13.7	CB05412	-
	M07412	75C311	0.75	0.55		1.5	Y - 6.6 B - 6.6 R - 0	970	Y - 7.8 B - 7.8 R - 0	1350	32	2.6 - 3.3	10.4 - 11.7	CB07412	-
	M10412	100C311	1.0	0.75		1.4	Y - 8.1 B - 8.1 R - 0	1215	Y - 9.4 B - 9.4 R - 0	1620	41	2.0 - 2.6	9.3 - 10.4	CB10412	-
3-Wire (CSCR) PREMIUM	M05412	50C311	0.5	0.37		1.6	Y - 4.2 B - 4.1 R - 1.8	715	Y - 4.8 B - 4.3 R - 1.8	960	21	5.1 - 6.1	12.4 - 13.7	CB-05412CR	-
	M07412	75C311	0.75	0.55		1.5	Y - 4.8 B - 4.4 R - 2.5	940	Y - 6.0 B - 4.9 R - 2.3	1270	32	2.6 - 3.3	10.4 - 11.7	CB-07412CR	-
	M10412	100C311	1.0	0.75		1.4	Y - 6.1 B - 5.2 R - 2.7	1165	Y - 7.3 B - 5.8 R - 2.6	1540	41	2.0 - 2.6	9.3 - 10.4	CB-10412CR	-
	M15412	150C311	1.5	1.1		1.3	Y - 9.1 B - 8.2 R - 1.2	1660	Y - 10.9 B - 9.4 R - 1.1	2130	49	2.1 - 2.5	10.0 - 10.8	CB-15412CR	CB-15412MC
	M20412	200C311	2	1.5		1.25	Y - 9.9 B - 9.1 R - 2.6	2170	Y - 12.2 B - 11.7 R - 2.6	2660	49	1.6 - 2.2	4.8 - 5.9[2]	CB-20412CR	CB-20412MC
	M30412	300C311	3	2.2		1.15	Y - 14.3 B - 12.0 R - 5.7	3170	Y - 16.5 B - 13.9 R - 5.6	3620	76	1.0 - 1.4	2.0 - 2.5	CB-30412CR	CB-30412MC
	M50412	500C311	5	3.7		1.15	Y - 24.0 B - 19.1 R - 10.2	5300	Y - 27.0 B - 22.0 R - 10.0	6030	101	.6 - .8	1.3 - 1.7	CB-50412CR	CB-50412MC

3-WIRE, SINGLE-PHASE 4" MOTORS - ENGINEERING DATA

				Efficiency %		Power Factor %		Thrust Rating	KVA Code
Type	Model	HP	Volts	F.L.	S.F.	F.L.	S.F.		
3-Wire CSIR (QD)	M05411	0.5	115	57	62	65	78	700 #	M
	M05412	0.5	230	52	58.5	61	75		L
	M07412	0.75		60	64.5	64	76		L
	M10412	1		63	66	66	76		L
3-Wire CSCR	M05412	0.5		54.5	61.5	77	87		L
	M07412	0.75		62	69	86	91		L
	M10412	1.0		66	71	86	91		L
	M15412	1.5		68	69	81	87		J
	M20412	2		70	70	89	91	900 #	G
	M30412	3		72	72	96	97		G
	M50412	5		70.5	71	97	97.5	1500 #	E

SINGLE-PHASE

Generation II Single-Phase (Current)

As part of Goulds Water Technology Motors' continual improvement process, further improvements have been made to Generation II motors through 2022. Our pump model numbers and motor order number will not change. The Motor Nameplate for the improved Generation II will have a - 01 suffix, example M05422 will be M05422 – 01, only on the Motor Nameplate not in our catalog or price book.

2 WIRE PSC, SINGLE-PHASE 4" MOTORS - ELECTRICAL DATA, 60 HZ, 3450 RPM

			Rating				Full Load		Service Factor		Locked Rotor Amps	Winding Resistance	
Type	Model	RJ Ref. #	HP	KW	Volts	SF	Amps (B or Y/B/R)	Watts	Amps (B or Y/B/R)	Watts		Main (B-Y or B-B)	Start (R-Y)
2-Wire (PSC)	M05421	50C201	0.5	0.37	115	1.6	8.1	890	10.2	1110	28	1.4 - 2.0	-
	M05422	50C211	0.5	0.37	230	1.6	4.3	845	4.8	1035	16	6.1 - 7.2	-
	M07422	75C211	0.75	0.55	230	1.5	5.0	1100	6.4	1375	18	5.9 - 6.9	-
	M10422	100C211	1.0	0.75	230	1.4	6.7	1450	8.2	1770	23.5	4.2 - 5.2	-
	M15422	150C211	1.5	1.1	230	1.3	9.1	1950	10.5	2300	43	1.8 - 2.4	-

2-WIRE, SINGLE-PHASE 4" MOTORS - ENGINEERING DATA

				Efficiency %		Power Factor %		Thrust Rating	KVA Code	Standard Fuse	Dual Element Time Delay Fuse	Circuit Breaker
Type	Model	HP	Volts	F.L.	S.F.	F.L.	S.F.					
2-Wire (PSC)	M05421	0.5	115	42	54	99	99	700 #	H	25	15	20
	M05422	0.5	230	44	58	90	97		J	15	10	10
	M07422	0.75	230	51	61	99	99		F	15	10	15
	M10422	1.0	230	52	59	99	99		F	20	15	20
	M15422	1.5	230	58	63	98	99		H	30	20	25

3-WIRE, SINGLE-PHASE 4" MOTORS - ELECTRICAL DATA, 60 HZ, 3450 RPM

			Rating				Full Load		Service Factor		Locked Rotor Amps	Winding Resistance		Standard Control Box	Deluxe Control Box (Mag Contactor)
Type	Model	RJ Ref. #	HP	KW	Volts	SF	Amps (B or Y/B/R)	Watts	Amps (B or Y/B/R)	Watts		Main (B-Y or B-B)	Start (R-Y)		
3-Wire (CSIR) PREMIUM	M05411	50C301	0.5	0.37	115	1.6	9.8/9.8/0	670	11.6/11.6/0	980	44	1.0 - 1.4	2.5 - 3.1	CB05411	-
	M05412	50C311	0.5	0.37	230	1.6	5.7/5.7/0	735	6.3/6.3/0	1035	20.5	5.1 - 6.1	12.4 - 13.7	CB05412	-
	M07412	75C311	0.75	0.55	230	1.5	6.7/6.7/0	940	7.9/7.9/0	1335	32	2.6 - 3.3	10.4 - 11.7	CB07412	-
	M10412	100C311	1	0.75	230	1.4	8.5/8.5/0	1175	9.5/9.5/0	1590	41	2.0 - 2.6	9.3 - 10.4	CB10412	-
3-Wire (CSCR) PREMIUM	M05412	50C311	0.5	0.37	230	1.6	4.4/4.3/1.9	715	5.0/4.5/1.9	950	21	5.1 - 6.1	12.4 - 13.7	CB05412CR	-
	M07412	75C311	0.75	0.55	230	1.5	4.6/4.6/2.6	920	6.1/5.1/2.6	1235	32	2.6 - 3.3	10.4 - 11.7	CB07412CR	-
	M10412	100C311	1.0	0.75	230	1.4	6.2/6.0/3.6	1165	7.4/6.3/3.3	1490	41	2.0 - 2.6	9.3 - 10.4	CB10412CR	-
	M15412	150C311	1.5	1.1	230	1.3	9.2/8.7/1.2	1660	11.0/9.9/1.2	2110	49	2.1 - 2.5	10.0 - 10.8	CB15412CR	CB15412MC
	M20412	200C311	2.0	1.5	230	1.25	9.9/9.1/2.6	2170	12.2/11.7/2.6	2660	49	1.6 - 2.2	4.8 - 5.9	CB20412CR	CB20412MC
	M30412	300C311	3.0	2.2	230	1.15	14.3/12.0/5.7	3170	16.5/13.9/5.6	3620	76	1.0 - 1.4	2.0 - 2.5	CB30412CR	CB30412MC
	M50412	500C311	5.0	3.7	230	1.15	24/19.1/10.2	5300	27.0/22.0/10.0	6030	101	.6 - .8	1.3 - 1.7	CB50412CR	CB50412MC

SINGLE-PHASE

Generation II Single-Phase (Current)

3-WIRE, SINGLE-PHASE 4" MOTORS - ENGINEERING DATA

					Efficiency %		Power Factor %		Thrust Rating	KVA Code
Type	Model	RJ REF #	HP	Volts	F.L.	S.F.	F.L.	S.F.		
3-Wire (CSIR) PREMIUM	M05411	50C301	0.5	115	55.5	61	63	77	700 #	M
	M05412	50C311	0.5	230	51	58	60	75		L
	M07412	75C311	0.75	230	60	63	64	78		L
	M10412	100C311	1	230	63.5	66	63	76		L
3-Wire (CSCR) PREMIUM	M05412	50C311	0.5	230	52	63	75	86		L
	M07412	75C311	0.75	230	61	68	86	93		L
	M10412	100C311	1.0	230	64	70	85	91		L
	M15412	150C311	1.5	230	68	69	82	87		J
	M20412	200C311	2.0	230	68	69	96	95	900 #	G
	M30412	300C311	3.0	230	72	72	96	97		G
	M50412	500C311	5.0	230	70.5	71	97	97.5	1500 #	E

THREE-PHASE **(Released April 2011)**

ELECTRICAL DATA, 60 HZ, 3450 RPM, 4" MOTORS

							Full Load		Service Factor		Locked	Winding Resistance
Type	GWT #	RJ Ref. #	HP	KW	Volts	SF	Amps	Watts	Amps	Watts	Rotor Amps	PH-PH
4" 3-Phase (PREMIUM)	M05430	50C323	0.5	0.37	200	1.6	2.9	600	3.4	870	22	4.1 - 5.2
	M07430	75C323	0.75	0.55		1.5	3.8	812	4.5	1140	32	2.6 - 3.0
	M10430	100C323	1	0.75		1.4	4.6	1150	5.5	1500	29	3.4 - 3.9
	M15430	150C323	1.5	1.1		1.3	6.3	1560	7.2	1950	40	1.9 - 2.5
	M20430	200C323	2	1.5		1.25	7.5	2015	8.8	2490	51	1.4 - 2.0
	M30430	300C323	3	2.2		1.15	10.9	2890	12.0	3290	71	1.2 - 1.5
	M50430	500C323	5	3.7		1.15	18.3	4850	20.2	5515	113	0.7 - 0.9
	M75430	750C323	7.5	5.5		1.15	27.0	7600	30.0	8800	165	0.4 - 0.6
	M05432	50C313	0.5	0.37	230	1.6	2.4	610	2.9	880	17.3	5.7 - 7.2
	M07432	75C313	0.75	0.55		1.5	3.3	850	3.9	1185	27	3.3 - 4.3
	M10432	100C313	1	0.75		1.4	4.0	1090	4.7	1450	26.1	4.1 - 5.1
	M15432	150C313	1.5	1.1		1.3	5.2	1490	6.1	1930	32.4	2.8 - 3.4
	M20432	200C313	2	1.5		1.25	6.5	1990	7.6	2450	44	2.2 - 2.8
	M30432	300C313	3	2.2		1.15	9.2	2880	10.1	3280	58.9	1.6 - 2.0
	M50432	500C313	5	3.7		1.15	15.7	4925	17.5	5650	93	.9 - 1.3
	M75432	750C313	7.5	5.5		1.15	24	7480	26.4	8570	140	.5 - .9
	M05434	50C353	0.5	0.37	460	1.6	1.3	610	1.5	875	9	23.6 - 26.1
	M07434	75C353	0.75	0.55		1.5	1.7	820	2.0	1140	14	14.4 - 16.2
	M10434	100C353	1	0.75		1.4	2.2	1145	2.5	1505	13	17.8 - 18.8
	M15434	150C353	1.5	1.1		1.3	2.8	1560	3.2	1980	16.3	12.3 - 13.1
	M20434	200C353	2	1.5		1.25	3.3	2018	3.8	2470	23	7.5 - 9.3
	M30434	300C353	3	2.2		1.15	4.8	2920	5.3	3320	30	6.3 - 7.7
	M50434	500C353	5	3.7		1.15	7.6	4810	8.5	5530	48	3.9 - 4.9
	M75434	750C353	7.5	5.5		1.15	12.2	7400	13.5	8560	87	2.1 - 2.7
	M100434	1000C353	10	7.5		1.15	15.6	9600	17.2	11000	110	1.8 - 2.2
	M15437	150C363	1.5	1.1	575	1.3	2.0	1520	2.4	1950	11.5	19.8 - 20.6
	M20437	200C363	2	1.5		1.25	2.7	1610	3.3	2400	21	10.2 - 12.5
	M30437	300C363	3	2.2		1.15	3.7	2850	4.1	3240	21.1	10.2 - 12.5
	M50437	500C363	5	3.7		1.15	7.0	5080	7.6	5750	55	3.6 - 4.2
	M75437	750C363	7.5	5.5		1.15	9.1	7260	10.0	8310	55	3.6 - 4.2

THREE-PHASE **(Released April 2011)**

4" MOTORS - ENGINEERING DATA

				Efficiency %				Standard Fuse		Dual Element Time Delay		Circuit Breaker	
Type	**GWT #**	**HP**	**Volts**	**F.L.**	**S.F.**	**Thrust Rating**	**KVA Code**	**Meets NEC Based on FL**	**Max Value Based on SFA**	**Meets NEC Based on FL**	**Max Value Based on SFA**	**Meets NEC Based on FL**	**Max Value Based on SFA**
4" 3-Phase (PREMIUM)	M05430	0.5	200	62	68	700 #	R	10	15	6	10	10	10
	M07430	0.75		69	74		R	15	15	10	15	10	15
	M10430	1		66	70		M	15	20	10	10	10	15
	M15430	1.5		72	74		L	20	25	10	15	15	20
	M20430	2		74	75	900 #	K	25	30	15	20	20	25
	M30430	3		77	77		K	35	40	20	25	30	35
	M50430	5		76	76	1500 #	J	60	70	35	40	50	60
	M75430	7.5		74	74		J	80	90	50	60	70	80
	M05432	0.5	230	61	68	700 #	R	6	10	6	6	6	10
	M07432	0.75		66	71		R	6	15	6	10	6	10
	M10432	1		69	72		M	10	15	6	10	10	15
	M15432	1.5		75	76		K	15	20	10	15	15	20
	M20432	2		75	75	900 #	K	15	25	15	15	20	20
	M30432	3		77	77		J	25	35	15	20	25	30
	M50432	5		76	76	1500 #	J	45	60	30	35	40	45
	M75432	7.5		75	75		J	70	80	45	50	60	70
	M05434	0.5	460	61	68	700 #	R	3	6	3	3	3	6
	M07434	0.75		69	73		R	3	10	6	6	3	6
	M10434	1		65	69		M	6	10	3	6	6	10
	M15434	1.5		72	73		K	10	10	6	6	6	10
	M20434	2		74	75	900 #	L	15	15	6	10	10	10
	M30434	3		76	77		J	15	20	10	10	15	15
	M50434	5		77	77	1500 #	J	25	30	15	20	15	25
	M75434	7.5		76	76		L	40	50	25	30	30	35
	M100434	10		79	80		K	45	60	25	35	35	45
	M15437	1.5	575	73	74	700 #	J	6	10	3	6	6	10
	M20437	2		78	78	900 #	M	10	10	6	6	10	10
	M30437	3		78	78		J	10	15	10	10	10	15
	M50437	5		74	75	1500 #	M	20	25	15	15	20	20
	M75437	7.5		77	77		J	25	35	20	20	25	30

THREE-PHASE **(Current)**

As part of Goulds Water Technology Motors' continual improvement process, further improvements have been made to Goulds Water Technology Three-Phase motors through 2022. Our pump model numbers and motor order number will not change. To decipher the November 2015 motors from the previous Three-Phase motors, please use the date code located on the motor. Motor date codes are 12 characters long, the first character represents the month and the fourth and fifth character represent the year. The self-stick, Mylar motor data stickers we pack with our motors and complete pumps will be updated with the new electrical data so that installers will know which motor is installed in the well should service work ever be necessary.

ELECTRICAL DATA, 60 HZ, 3450 RPM, 4" MOTORS

							Full Load		Service Factor		Locked Rotor Amps	Winding Resistance
Type	GWT #	RJ Ref. #	HP	KW	Volts	SF	Amps	Watts	Amps	Watts		PH-PH
4" 3-Phase (PREMIUM)	M05430	50C323	0.5	0.37	200	1.6	2.9	600	3.5	860	22	4.1 - 5.2
	M07430	75C323	0.75	0.55		1.5	3.9	820	4.7	1150	30	2.8 - 3.7
	M10430	100C323	1.0	0.75		1.4	4.8	1120	5.7	1470	34	2.2 - 3.1
	M15430	150C323	1.5	1.1		1.3	6.6	1650	7.6	1950	40	1.9 - 2.5
	M20430	200C323	2.0	1.5		1.25	8.0	1960	9.3	2455	51	1.4 - 2.0
	M30430	300C323	3.0	2.20		1.15	10.9	2890	12.0	3290	71	1.2 - 1.5
	M50430	500C323	5.0	3.70		1.15	18.3	4850	20.2	5515	113	.7 - .9
	M75430	750C323	7.5	5.50		1.15	27.0	7600	30.0	8800	165	.4 - .6
	M05432	50C313	0.5	0.37	230	1.6	2.4	575	3.0	860	18	5.7 - 7.2
	M07432	75C313	0.75	0.55		1.5	3.3	805	4.0	1160	27	3.3 - 4.3
	M10432	100C313	1.0	0.75		1.4	4.1	1070	4.9	1440	26	3.2 - 4.2
	M15432	150C313	1.5	1.1		1.3	5.8	1550	6.6	1950	36	2.5 - 3.1
	M20432	200C313	2.0	1.5		1.25	6.7	1965	8.0	2465	44	2.2 - 2.8
	M30432	300C313	3.0	2.2		1.15	9.2	2880	10.1	3280	59	1.6 - 2.0
	M50432	500C313	5.0	3.7		1.15	15.7	4925	17.5	5650	93	.9 - 1.3
	M75432	750C313	7.5	5.5		1.15	24.0	7480	26.4	8570	140	.5 - .9
	M05434	50C353	0.5	0.37	460	1.6	1.3	620	1.5	865	9	23.6 - 26.1
	M07434	75C353	0.75	0.55		1.5	1.7	825	2.0	1140	14	14.4 - 16.2
	M10434	100C353	1.0	0.75		1.4	2.2	1140	2.5	1460	15	16.8 - 18.6
	M15434	150C353	1.5	1.1		1.3	3.0	1540	3.4	1960	16	9.5 - 10.5
	M20434	200C353	2.0	1.5		1.25	3.6	1960	4.1	2440	23	7.5 - 9.3
	M30434	300C353	3.0	2.20		1.15	4.8	2920	5.3	3320	30	6.3 - 7.7
	M50434	500C353	5.0	3.70		1.15	7.6	4810	8.5	5530	48	3.9 - 4.9
	M75434	750C353	7.5	5.50		1.15	12.2	7400	13.5	8560	87	2.1 - 2.7
	M100434	1000C353	10.0	7.50		1.15	15.6	9600	17.2	11000	110	1.8 - 2.2
	M15437	150C363	1.5	1.1	575	1.3	2.3	1540	2.6	1970	15	15.6 - 17.3
	M20437	200C363	2.0	1.50		1.25	2.7	1610	3.3	2400	21	10.2 - 12.5
	M30437	300C363	3.0	2.20		1.15	3.7	2850	4.1	3240	21	10.2 - 12.5
	M50437	500C363	5.0	3.7		1.15	7.0	5080	7.6	5750	55	3.6 - 4.2
	M75437	750C363	7.5	5.5		1.15	9.1	7260	10.0	8310	55	3.6 - 4.2

THREE-PHASE **(Current)**

4" MOTORS - ENGINEERING DATA

				Efficiency %				Standard Fuse		Dual Element Time Delay		Circuit Breaker	
Type	GWT #	HP	Volts	F.L.	S.F.	Thrust Rating	KVA Code	Meets NEC Based on FL	Max Value Based on SFA	Meets NEC Based on FL	Max Value Based on SFA	Meets NEC Based on FL	Max Value Based on SFA
4" 3-Phase (PREMIUM)	M05430	0.5	200	64.0	69.5	700	R	10	15	6	10	10	10
	M07430	0.75		68.0	73.0	700	R	15	15	10	15	10	15
	M10430	1.0		69.0	73.0	700	N	15	20	10	10	10	15
	M15430	1.5		73.0	74.5	700	L	20	25	10	15	15	20
	M20430	2.0		76.0	76.0	900	K	25	30	15	20	20	25
	M30430	3.0		77.0	77.0	900	K	35	40	20	25	30	35
	M50430	5.0		76.0	76.0	1500	J	60	70	35	40	50	60
	M75430	7.5		74.0	74.0	1500	J	80	90	50	60	70	80
	M05432	0.5	230	65	69.5	700	R	6	10	6	6	6	10
	M07432	0.75		69.5	72.5	700	R	6	15	6	10	6	10
	M10432	1		70	72.5	700	M	10	15	6	10	10	15
	M15432	1.5		72	74.5	700	L	15	20	10	15	15	20
	M20432	2		76	75.5	900	K	15	25	15	15	20	20
	M30432	3		77	77	900	J	25	35	15	20	25	30
	M50432	5		76	76	1500	J	45	60	30	35	40	45
	M75432	7.5		75	75	1500	J	70	80	45	50	60	70
	M05434	0.5	460	60.5	69	700	R	3	6	3	3	3	6
	M07434	0.75		68	73.5	700	R	3	10	6	6	3	6
	M10434	1		65.5	71.5	700	N	6	10	3	6	6	10
	M15434	1.5		73	74	700	L	10	10	6	6	6	10
	M20434	2		76	76.5	900	L	15	15	6	10	10	10
	M30434	3		77	77	900	J	15	20	10	10	15	15
	M50434	5		77	77	1500	J	25	30	15	20	15	25
	M75434	7.5		76	76	1500	L	40	50	25	30	30	35
	M100434	10		79	80	1500	K	45	60	25	35	35	45
	M15437	1.5	575	73	74	700	K	6	10	3	6	6	10
	M20437	2		78	78	900	M	10	10	6	6	10	10
	M30437	3		78	78	900	J	10	15	10	10	10	15
	M50437	5		74	75	1500	M	20	25	15	15	20	20
	M75437	7.5		77	77	1500	J	25	35	20	20	25	30

WIRE SIZING

4" PREMIUM MOTORS – 2-WIRE SINGLE-PHASE (All Generations)

Motor Lead Lengths - Goulds Water Technology 2 Wire Motors - Based on Service Factor Amps, 30°C Ambient & 5% Voltage Drop															
					Motor Rating										
Volts	**HP**	**kW**	**FLA**	**SFA**	**14**	**12**	**10**	**8**	**6**	**4**	**2**	**1/0**	**2/0**	**3/0**	**4/0**
115	½	0.37	8.1	10.2	107	171	273	432	672	1071	1700	2703	3411	4305	5424
230	½	0.37	4.3	4.8	457	726	1158	1835	2855	4551	7225	11489			
230	¾	0.55	5.0	6.4	342	545	869	1376	2141	3413	5419	8617	10871		
230	1	0.75	6.7	8.2	267	425	678	968	1506	2400	3811	6060	7646	9652	
230	1½	1.1	9.1	10.5	209	332	530	801	1246	1986	3153	5013	6325	7985	

4" PREMIUM MOTORS – 3-WIRE SINGLE-PHASE (All Generations)

Motor Lead Lengths - Goulds Water Technology 3 Wire Motors - Based on Service Factor Amps, 30°C Ambient, & 5% Voltage Drop															
Motor Rating					60°C & 75°C Insulation - AWG Copper Wire Size										
Volts	**HP**	**kW**	**FLA**	**SFA**	**14**	**12**	**10**	**8**	**6**	**4**	**2**	**1/0**	**2/0**	**3/0**	**4/0**
CSIR Control Boxes															
115	1/2	0.37	9.8	11.6	94	150	240	349	544	867	1376	2188	2716	3485	4391
230	1/2	0.37	5.7	6.3	348	553	883	1398	2175	3467	5505	8753			
	3/4	0.55	6.7	7.9	277	441	704	1061	1651	2632	4178	6644	8383		
	1	0.75	8.5	9.5	231	367	585	908	1413	2252	3575	5685	7173		
CSCR Control Boxes															
230	1/2	0.37	4.4	5.0	438	697	1112	1398	2175	3467	5505	8753			
	3/4	0.55	4.6	6.1	359	571	912	1061	1651	2632	4178	6644	8383		
	1	0.75	6.2	7.4	296	471	751	908	1413	2252	3575	5685	7173		
	1 1/2	1.1	9.2	11.0	199	317	505	793	1246	1986	3124	4968	6268		
	2	1.5	9.9	12.2	180	286	456	722	1123	1790	2843	4520	5703		
	3	2.2	14.3	16.5	133	211	337	534	830	1324	2102	3342	4217	5323	
	5	3.7	24.0	27.0			206	326	507	809	1284	2042	2577	3253	

WIRE SIZING

3Ø 4" GOULDS WATER TECHNOLOGY MOTOR WIRE CHART (All Generations)

Motor Lead Lengths - Goulds Water Technology Three-Phase Motors - Based on Service Factor Amps, 30°C Ambient, & 5% Voltage Drop															
Motor Rating					60°C & 75°C Insulation - AWG Copper Wire Size										
Volts	HP	kW	FLA	SFA	14	12	10	8	6	4	2	1/0	2/0	3/0	4/0
200	.5	0.37	2.9	3.5	629	1000	1595	2526	3931						
	.75	.55	3.8	4.5	468	745	1188	1702	2648						
	1	.75	4.6	5.5	386	614	979	1392	2166	3454					
	1.5	1.1	6.3	7.2	290	461	735	1064	1655	2638					
	2	1.5	7.5	8.8	237	376	600	870	1354	2158	3427	5449			
	3	2.2	10.9	12.0	183	292	465	638	993	1583	2513	3996			
	5	3.7	18.3	20.2	109	173	276	379	590	940	1493	2374	2995	3781	4764
	7.5	5.5	27.0	30.0	73	117	186	255	397	633	1005	1598	2017	2546	3207
230	.5	.37	2.4	2.9	844	1342	2140	3037	4725	7532					
	.75	.55	3.3	3.9	633	1006	1605	2258	3513	5601	8892				
	1	.75	4	4.7	516	821	1310	1874	2915	4648	7379				
	1.5	1.1	5.2	6.1	383	610	973	1444	2246	3581	5685	9040			
	2	1.5	6.5	7.6	316	503	803	1159	1803	2874	4563	7256	9155		
	3	2.2	9.2	10.1	251	399	636	872	1357	2163	3434	5460	6889	8696	10956
	5	3.7	15.7	17.5	145	230	367	503	783	1248	1982	3151	3976	5019	6323
	7.5	5.5	24	26.4	96	152	243	334	519	827	1314	2089	2635	3327	4192
460	.5	.37	1.3	1.5	3374	5367	8561								
	.75	.55	1.7	2.0	2531	4025	6420	8806							
	1	.75	2.2	2.5	2024	3220	5136	7045							
	1.5	1.1	2.8	3.2	1489	2368	3777	5504							
	2	1.5	3.3	3.8	1234	1964	3132	4635	7212						
	3	2.2	4.8	5.3	955	1519	2423	3323	5171						
	5	3.7	7.6	8.5	595	947	1511	2072	3224	5140					
	7.5	5.5	12.2	13.5	375	596	951	1305	2030	3236	5138				
	10	7.5	15.6	17.2	294	468	747	1024	1593	2540	4033				
575	1.5	1.1	2.0	2.4	2433	3870	6173								
	2	1.5	2.7	3.3	1917	3049	4864	6671							
	3	2.2	3.7	4.1	1543	2454	3915	5370							
	5	3.7	7.0	7.6	832	1324	2112	2897	4507						
	7.5	5.5	9.1	10.0	633	1006	1605	2202	3426						

WEIGHTS AND DIMENSIONS

2-WIRE & 3-WIRE WEIGHTS AND DIMENSIONS

				Length (L) In.			Weight (lbs)		
Type	**GWT Order No.**	**HP**	**Volts**	**Gen I**	**Gen II**	**Gen II - Current**	**Gen I**	**Gen II**	**Gen II - Current**
2-Wire (PSC) Premium	M05421	.5	115	11	10.5		19	18	18.1
	M05422	.5	230	11	10.5		19	18	18.1
	M07422	.75		12.4	11.9		23	22	21.4
	M10422	1		13.3	12.5		25	24	23.2
	M15422	1.5		14.9	14.2		29	28	27.3
3-Wire Premium	M05411	.5	115	10	9.6		19	18	17.9
	M05412	.5	230	9.7	9.2		18	17	16.7
	M07412	.75		10.8	10.3		22	20	19.8
	M10412	1		11.7	11.2		23	22	22
	M15412	1.5		13.6	12.8		28	26	26
	M20412	2		15.1			31		
	M30412	3		18.3			40		
	M50412	5		27.7			70		

THREE-PHASE, 4" MOTOR, LENGTHS AND WEIGHTS

		Length		Weight	
HP	**Volts**	**Inches**	**mm**	**lb.**	**kg.**
0.5	200 230 460	10.0	254	19	8.6
0.75		10.8	275	22	9.7
1.0		11.7	297	23	10.4
1.5		11.7	297	23	10.4
2.0		13.8	351	28	12.7
3.0		15.3	389	32	14.5
5.0		21.7	550	55	24.9
7.5		27.7	703	70	31.8
10.0		30.7	780	78	35.4
1.5	575	11.7	297	23	10.4
2.0		15.3	389	32	14.5
3.0		15.3	389	32	14.5
5.0		27.7	703	70	31.8
7.5		27.7	703	70	31.8

USING TWO DIFFERENT CABLE SIZES

In some situations, it is desired to use two or more wire sizes on a pump installation. This is acceptable as long as the maximum cable length ratings are not exceeded. The data below describes how to safely accomplish the task. The cable lengths in the wire sizing charts represent 100% of the allowable length for each wire size. Never use more than 100% of any length shown in the table.

The Three-Wire, Single-Phase Motor Wire Chart will be used in this example. See page 8.

Installation Data:

- 2 hp, 230 V, 1Ø, 3-wire motor
- 150 feet of #12 wire buried between the home (service entrance) and the well
- Pump is set at 340 feet
- Total wire length is 490 feet

Refer to 3-Wire Motor Lead Length Chart

- Select row for 2 hp, 230 V, single-phase motor
- Maximum wire lengths are:
  - #12 - 286′ • #10 - 456′ • # 8 - 722′
- Allowable drop cannot exceed 100% of any length or combination of lengths

The existing 150 feet of #12 underground wire uses 150′/286′ = 52.4% of the allowable length.
100% - 52.4% = 47.6% of another wire available to use.

340′/456′ = 74.5% of #10 - 74.5% + 52.4% = 126.9% - over 100% is not allowable

340′/722′ = 47.1% of #8 - 47.1% + 52.4% = 99.5% which is allowable

On this application we can use 150′ of #12 with 340′ of #8.

The formula is: $\frac{\text{Actual Length 1}}{\text{Maximum Allowed}} + \frac{\text{Actual length 2}}{\text{Maximum Allowed}} \leq 1 \text{ or } \leq 100\%$

Using this formula it is possible to size wire using 2 or more different wire sizes.

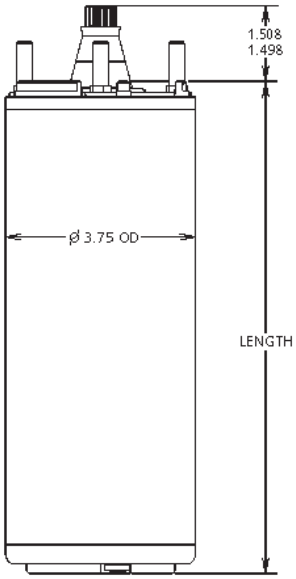

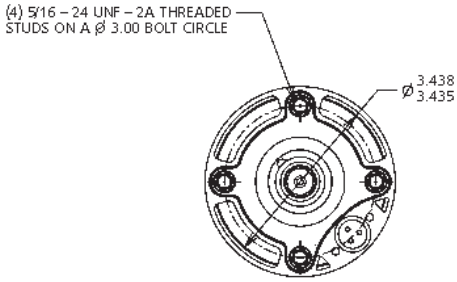

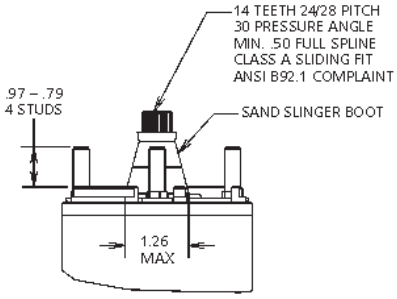

CENTRIPRO (HITACHI) 6-10" THREE-PHASE MOTORS

Motor Order No.	HP	KW	Volts	Phase	Motor Dia. vs. Flange Dia.	SF	Rated Input		Service Factor		Full Load Speed (RPM)	Locked Rotor Amps
							Amps	Watts	Amps	Watts		
6M058	5	3.7	200	3	6" x 6"	1.15	17.5	4910	19.5	5610	3468	124
6M052	5	3.7	230				15.0	4857	17.0	5520	3468	110
6M054	5	3.7	460				7.5	4857	8.5	5520	3468	55
6M078	7.5	5.5	200				25.4	7180	28.5	8230	3479	158
6M072	7.5	5.5	230				22.0	7127	26.0	8140	3479	144
6M074	7.5	5.5	460				11.0	7127	13.0	8140	3479	72
6M108	10	7.5	200				33.3	9360	37.2	10700	3480	236
6M102	10	7.5	230				29.0	9407	33.0	10730	3480	208
6M104	10	7.5	460				14.5	9407	16.5	10730	3480	104
6M158	15	11	200				47.4	13700	53.5	15710	3483	347
6M152	15	11	230				42.0	13700	46.0	15800	3483	320
6M154	15	11	460				21.0	13700	23.0	15800	3483	160
6M208	20	15	200				61.2	18040	69.5	20820	3461	431
6M202	20	15	230				54.0	17930	60.0	20650	3461	392
6M204	20	15	460				27.0	17930	30.0	20650	3461	196
6M258	25	18.5	200				77.3	22740	87.5	26190	3479	578
6M252	25	18.5	230				68.0	22470	76.0	25800	3479	530
6M254	25	18.5	460				34.0	22470	38.0	25800	3479	265
6M308	30	22	200				91.8	27000	104.0	31120	3476	674
6M302	30	22	230				82.0	27130	94.0	31160	3476	610
6M304	30	22	460				41.0	27130	47.0	31160	3476	305
6M404	40	30	460				56.0	35530	61.0	41100	3447	420
66M504	50	37	460				70.0	45210	79.0	52380	3398	465
86M504	50	37	460		8" x 6"		65.0	44501	73.0	50891	3484	435
86M604	60	45	460				80.0	51866	90.0	59576	3491	556
8M754	75	55	460		8" x 8"		96.0	65900	109.0	76100	3489	675
8M1004	100	75	460				127.0	87600	145.0	101300	3478	855
8M1254	125	90	460				161.0	110800	180.0	126000	3477	1122
8M1504	150	110	460				197.0	130700	220.0	152000	3472	1331
10M2004	200	150	460		10 "x 10"		235.0	171100	270.0	198600	3478	1260

5-30 HP, 3 Phase 230 and 460 Motors have adjustable voltage feature, change voltage plugs to convert from 230V to 460V operation.
Spare Change Plug Order No's are: PLUG-230V or PLUG-460V

6" SINGLE-PHASE MOTORS AND REQUIRED CONTROL BOXES

Motor Order No.	HP	KW	Volts	Phase	Motor Dia. vs. Flange Dia.	SF	Rated Input		Service Factor		Full Load Speed (RPM)	Locked Rotor Amps	Control Box Order No.
							Amps	Watts	Amps	Watts			
6M051	5	3.7	230	1	6" x 6"	1.15	24	4987	27.5	5735	3492	124	CB05MC3R
6M071	7.5	5.5					36	7675	41	8950	3448	167	CB07MC3R
6M101	10	7.5					50	10135	58	11830	3452	202	CB10MC3R
6M151	15	11					72	15180	85	18050	3424	275	CB15MC3R

CENTRIPRO (HITACHI) 6-10" THREE-PHASE MOTORS

Motor Order No.	HP	kW	Volts	Phase	F.L. Efficiency %	KVA Code	Line - Line Resistance	Time Delay Fuse	
								Standard	Dual Element
6M058	5	3.7	200	3	75.9	K	0.618	50	25
6M052	5	3.7	230		76.8	K	0.806	45	20
6M054	5	3.7	460		76.8	K	3.050	25	10
6M078	7.5	5.5	200		77.9	J	0.504	80	40
6M072	7.5	5.5	230		78.5	J	0.651	70	30
6M074	7.5	5.5	460		78.5	J	2.430	35	15
6M108	10	7.5	200		79.7	K	0.315	100	50
6M102	10	7.5	230		79.3	K	0.448	90	40
6M104	10	7.5	460		79.3	K	1.619	45	20
6M158	15	11	200		81.7	K	0.213	175	70
6M152	15	11	230		81.7	K	0.312	150	60
6M154	15	11	460		81.7	K	1.074	70	30
6M208	20	15	200		82.7	J	0.189	200	90
6M202	20	15	230		83.2	J	0.258	175	70
6M204	20	15	460		83.2	J	0.861	90	35
6M258	25	18.5	200		82.0	K	0.146	250	110
6M252	25	18.5	230		83.0	K	0.210	225	90
6M254	25	18.5	460		83.0	K	0.666	110	45
6M308	30	22	200		82.9	J	0.119	300	125
6M302	30	22	230		82.5	K	0.166	250	100
6M304	30	22	460		82.5	K	0.554	125	50
6M404	40	30	460		83.7	K	0.358	175	100
66M504	50	37	460		82.5	J	0.308	225	125
86M504	50	37	460		84.1	H	0.331	225	125
86M604	60	45	460		86.2	J	0.278	250	150
8M754	75	55	460		86.9	H	0.218	300	175
8M1004	100	75	460		86.6	H	0.164	400	225
8M1254	125	90	460		86.9	J	0.132	500	300
8M1504	150	110	460		86.8	H	0.115	600	350
10M2004	200	150	460		87.2	F	0.0929	800	450

6" SINGLE-PHASE MOTORS

Motor Order No.	HP	kW	Volts	Phase	F.L. Efficiency %	KVA Code	Resistance - Ohms		
							R - Y	B - Y	R - B
6M051	5	3.7	230	1	74.8	G	2.172	0.512	2.627
6M071	7.5	5.5			72.9	F	1.401	0.400	1.774
6M101	10	7.5			73.6	E	1.052	0.316	1.310
6M151	15	11			73.7	D	0.678	0.230	0.850

CONTROL BOXES FOR 6" CENTRIPRO (HITACHI) SINGLE-PHASE MOTORS*

Control Box Order Number	Use On Motor No.	Hp	Volts	Capacitor Ratings (Mfd)		Contactor Rating	Overload Circuit Breaker	Enclosure Dimensions	Shipping Weight (lbs.)
				Start Caps	Run Caps				
CB05MC3R	6M051	5	230	189-227 / 330V	30 / 440V	30A	30A	12.5" H x 11" W x 6.7" D	15
CB07MC3R	6M071	7.5		243 - 292 / 330V	40 / 440V	50A	50A		
CB10MC3R	6M101	10		161 - 193 / 330V (Qty 2)	(2) 25 / 440V	75A	60A	17.5" H x 11" W x 6.7" D	27
CB15MC3R	6M151	15		216 - 260 / 330V (Qty 2)	(2) 35 / 440V	90A	90A		
CB15MC3R100 ①							100A		

① Overload circuit breaker is rated at 100 amps versus 90 amp standard in CB15MC. Use in areas with high ambient temperatures to reduce nuisance tripping.

CONTROL BOXES FOR 6" FM SERIES SINGLE-PHASE MOTORS

Control Box Order Number	Use On Motor No.	Hp	Volts	Capacitor Ratings (Mfd)		Contactor Rating	Overload Circuit Breaker	Enclosure Dimensions	Shipping Weight (lbs.)
				Start Caps	Run Caps				
CB05MC3RF	6F051	5	230	216-260	(2) 30	30A	30A	12.5"H x 11"W x 6.7"D	15
CB07MC3RF	6F071	7.5		(2) 189-227	(1) 60	50A	50A		
CB10MC3RF	6F101	10		216-260	(2) 50	70A	60A	17.5"H x 11"W x 6.7"D	27
CB15MC3RF	6F151	15			(2) 70	90A	80A		

Note: FM Series control boxes are designed for use with FM Series 6" motors only. Use with motor part numbers "6F…".

Motor overload circuit breaker size based on FLA of motor. FM Series motor can only use 80 A O.L. breaker.

6" MOTOR CONTROL BOX PART LIST

Order No.	Part Description	Where Used
9K580	Relay	ALL
9K581	Run Capacitor 35uF at 450V	CB15MC3R & CB15MC3R100
9K582	Start Capacitor 216-260uF at 330V	CB05MC3RF, CB10MC3RF, CB15MC3R, CB15MC3RF & CB15MC3R100
9K608	Start Capacitor 161-193uf at 330VAC	CB10MC3R
9K609	Start Capacitor 243-292uf at 330VAC	CB07MC3R
9K610	Start Capacitor 189-227uf at 330VAC	CB05MC3R
9K611	Run Capacitor 25uf at 450VAC	CB10MC3R
9K612	Run Capacitor 40uf at 450VAC	CB07MC3R
9K613	Run Capacitor 30uf at 450VAC	CB05MC3R
9K614	DP Mag Contactor 90 FLA, 3 pole	CB10MC3R, CB10MC3RF, CB15MC3R, CB15MC3R100 & CB15MC3RF
9K616	DP Mag Contactor 50 FLA, 3 pole	CB05MC3R, CB05MC3RF, CB07MC3R & CB07MC3RF
9K618	Circuit Breaker 100A	CB15MC3R100
9K619	Circuit Breaker 90A	CB15MC3R
9K620	Circuit Breaker 60A	CB10MC3R & CB10MC3RF
9K621	Circuit Breaker 50A / 45A	CB07MC3R & CB07MC3RF
9K622	Circuit Breaker 30A	CB05MC3R & CB05MC3RF
9K826	Circuit Breaker 80A	CB15MC3RF
9K827	DP Mag Contactor 40 FLA, 2 pole	CB10MC3RF & CB15MC3RF
9K828	Run Capacitor 70uf at 440VAC	CB15MC3RF
9K829	Run Capacitor 60uf at 440VAC	CB07MC3RF
9K830	Run Capacitor 50uf at 440VAC	CB10MC3RF
9K831	Start Capacitor 189-227uf at 330uf	CB07MC3RF
9K832	Run Capacitor 30uf at 440VAC	CB05MC3RF

CENTRIPRO MOTOR DIAGRAMS

5 AND 7.5 HP WIRING DIAGRAM

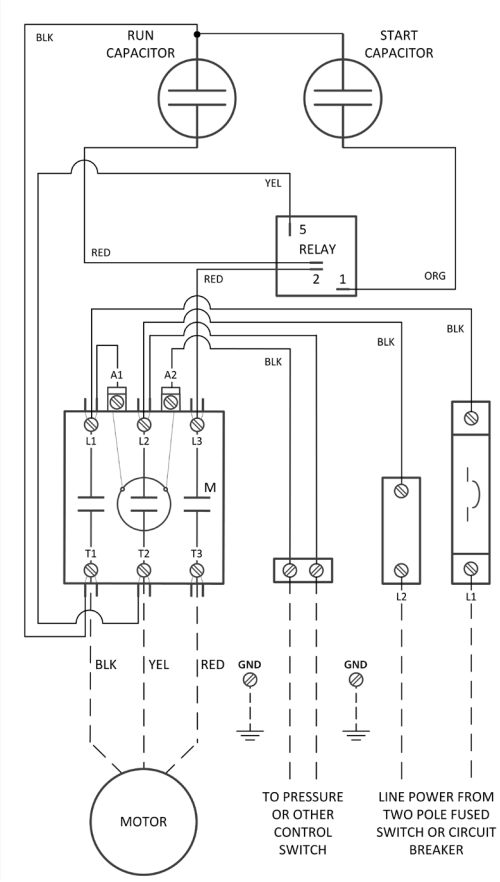

10 AND 15 HP WIRING DIAGRAM

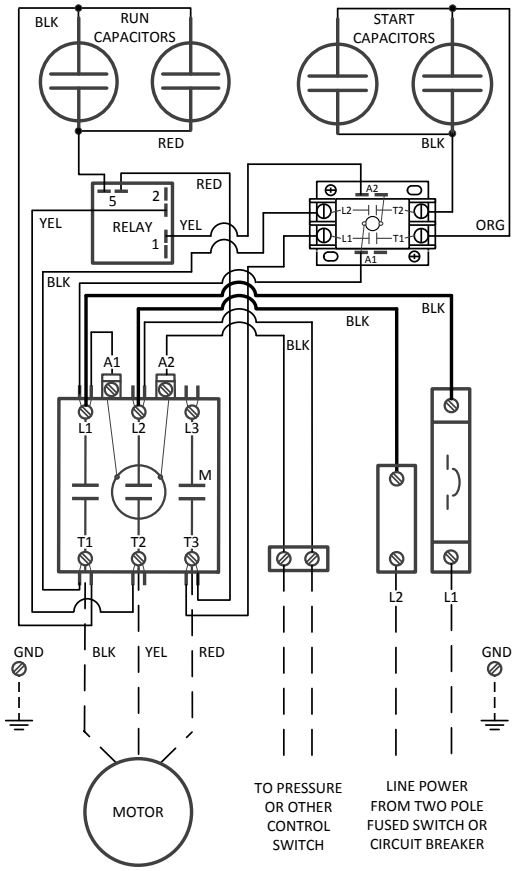

FM SERIES MOTOR DIAGRAMS

5 HP WIRING DIAGRAM

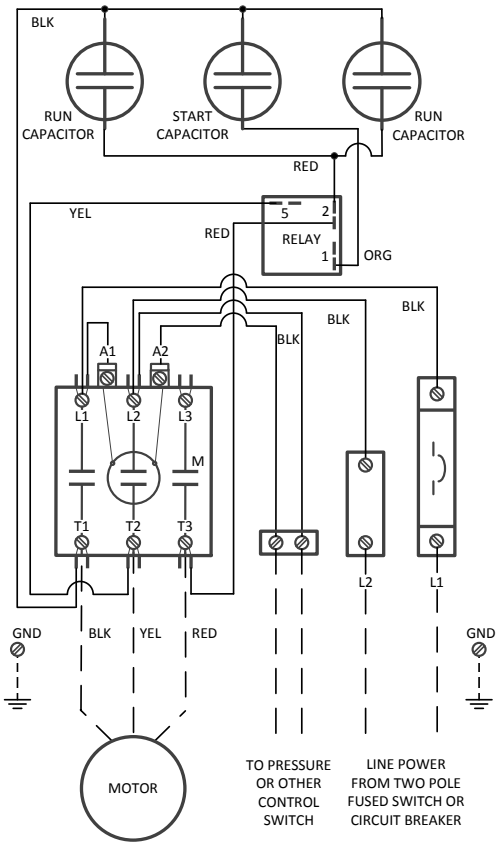

7.5 HP WIRING DIAGRAM

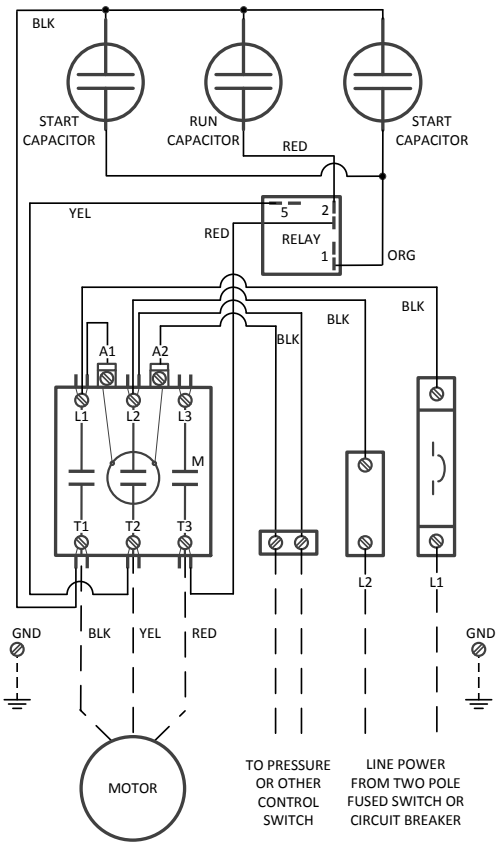

10 AND 15 HP WIRING DIAGRAM

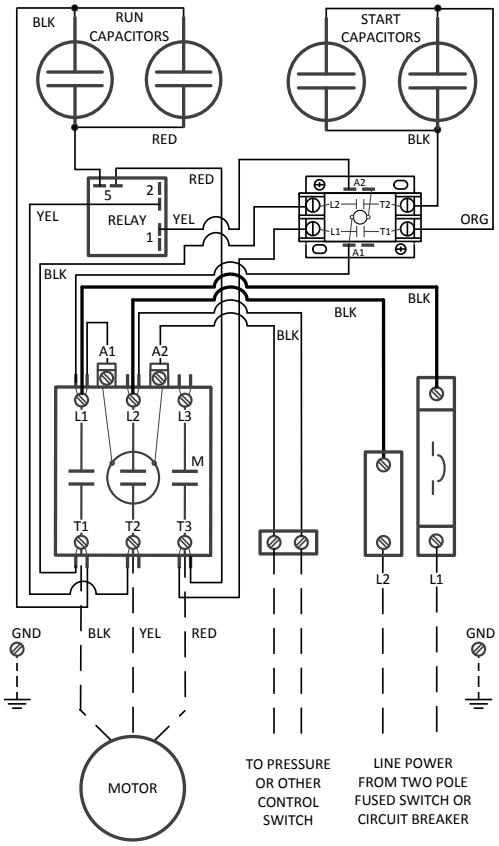

Use for CentriPro (Hitachi) 6-10" Three-Phase Motors

75° C CABLE, 60 HZ (SERVICE ENTRANCE TO MOTOR) MAXIMUM LENGTH IN FEET

Motor Rating		75° C Insulation - AWG Copper Wire Size														
Volts	**HP**	**14**	**12**	**10**	**8**	**6**	**4**	**2**	**1**	**1/0**	**2/0**	**3/0**	**4/0**	**250**	**350**	**500**
230V 60 Hz. Three Phase 3 Lead	5	**140**	230	370	590	920	1430	2190	2690	3290	4030	4850	5870	6650	8460	
	7.5	0	**150**	250	410	640	1010	1540	1900	2310	2840	3400	4120	4660	5910	7440
	10	0	0	**180**	300	470	740	1140	1410	1720	2110	2550	3090	3510	4500	5710
	15	0	0	0	**200**	320	510	790	970	1180	1450	1760	2120	2410	3080	3900
	20	0	0	0	**150**	**240**	390	600	750	920	1130	1370	1670	1900	2440	3100
	25	0	0	0	0	**190**	310	490	600	730	900	1100	1330	1510	1950	2480
	30	0	0	0	0	0	**250**	390	490	590	730	890	1080	1230	1580	2030
460V 60 Hz. Three Phase 3 Lead	5	590	950	1500	2360	3700	5750									
	7.5	410	670	1060	1670	2610	4060	6200	7610							
	10	300	480	770	1220	1910	2980	4580	5630	6900						
	15	0	**330**	530	840	1320	2070	3160	3890	4760	5840	7040				
	20	0	0	400	640	1020	1600	2460	3020	3710	4560	5500				
	25	0	0	**320**	520	810	1280	1960	2410	2960	3640	4400	5350			
	30	0	0	0	**410**	650	1030	1570	1950	2390	2940	3560	4330	4940		
	40	0	0	0	**320**	**500**	790	1220	1500	1840	2270	2730	3320	3760		
	50	0	0	0	0	**390**	**610**	940	1170	1430	1750	2110	2560	2910	3700	4690
	60	0	0	0	0	0	**540**	830	1020	1250	1540	1860	2250	2550	3260	4120
	75	0	0	0	0	0	**430**	**660**	820	1000	1230	1480	1810	2050	2640	3360
	100	0	0	0	0	0	0	**490**	**610**	**750**	930	1120	1360	1540	1990	2520
	125	0	0	0	0	0	0	0	0	**620**	**770**	**920**	1040	1270	1620	2040
	150	0	0	0	0	0	0	0	0	0	**620**	**750**	**910**	1040	1330	1680
	200	0	0	0	0	0	0	0	0	0	0	**610**	**740**	**840**	1070	1370

Lengths **IN BOLD TYPE** meet the National Electric Code ampacity only for individual conductor 75° C cable, in free air or water. If other cable is used, the National Electric Code as well as the local codes should be observed.

NOTE: Since 60° C cable is no longer the industry standard and is not readily available, we have removed the chart.

Use for CentriPro (Hitachi) 6-10" Single-Phase Motors

75° C CABLE, 60 HZ (SERVICE ENTRANCE TO MOTOR) MAXIMUM LENGTH IN FEET

Motor Rating		75° C Insulation - AWG Copper Wire Size														
Volts	**HP**	**14**	**12**	**10**	**8**	**6**	**4**	**2**	**1**	**1/0**	**2/0**	**3/0**	**4/0**	**250**	**350**	**500**
230V 60 Hz. Single Phase	5	0	100	170	260	430	680	1060	1330	1660	2070	2560	3190			
	7.5	0	0	**120**	200	310	490	760	940	1150	1420	1740	2120			
	10	0	0	0	**140**	220	340	520	660	810	1020	1250	1540			
	15	0	0	0	0	**140**	**230**	370	450	560	700	870	1080			

FM SERIES 6" THREE-PHASE SUBMERSIBLE MOTORS

Motor Order No.	Rating						Rated Input		Maximum Load (SF Load)		Full Load Speed (RPM)	Locked Rotor Amps
	HP	KW	Volts	Phase	Motor Dia. vs. Flange Dia.	Service Factor	Amps	Watts	Amps	Watts		
6F058	5	3.7	200-208	3	6" x 6"	1.15	16.1	4830	18.0	5490	3470	96
6F078	7.5	5.5					23.3	7000	26.8	8070	3435	140
6F108	10	7.5					31.5	9090	35.0	10400	3480	187
6F158	15	11					44.9	13440	50.8	15460	3475	268
6F208	20	15					59.0	17850	67.1	20630	3470	354
6F258	25	19					76.8	22110	86.5	25520	3490	445
6F308	30	22					91.7	26420	103.3	30450	3500	530
6F0524*	5	3.7	230				14.4	4830	16.1	5490	3460	87
6F0724*	7.5	5.5					21.5	7000	24.1	8070	3445	127
6F1024*	10	7.5					28.0	9090	31.5	10400	3470	164
6F1524*	15	11					40.9	13440	46.3	15460	3470	237
6F2024*	20	15					53.2	17850	60.8	20630	3460	312
6F2524*	25	19					66.7	22110	76.0	25520	3480	387
6F3024*	30	22					79.3	26420	90.2	30450	3480	458
6F0524*	5	3.7	460				7.0	4830	8.0	5490	3480	44
6F0724*	7.5	5.5					10.0	7000	11.3	8070	3475	62
6F1024*	10	7.5					13.1	9090	14.8	10400	3475	82
6F1524*	15	11					20.4	13440	23.0	15460	3470	117
6F2024*	20	15					25.8	17850	29.4	20630	3470	151
6F2524*	25	19					32.8	22110	36.8	25520	3475	187
6F3024*	30	22					39.3	26420	44.6	30450	3480	226
6F404	40	30					51.3	35030	58.6	40500	3480	302
6F504	50	37					65.8	44350	75.1	51200	3460	385
6F055	5	3.7	575				5.8	4830	6.5	5490	3450	35
6F075	7.5	5.5					8.2	7000	9.3	8070	3470	51
6F105	10	7.5					10.5	9090	11.8	10400	3485	61
6F155	15	11					15.0	13440	17.1	15460	3465	88
6F205	20	15					20.9	17850	23.7	20630	3485	122
6F255	25	19					26.2	22110	29.7	25520	3480	153
6F305	30	22					31.0	26420	35.0	30450	3465	179
6F405	40	30					41.5	35030	47.3	40500	3460	247
6F505	50	37					53.0	44350	61.0	51200	3460	323

* Same motor with voltage change device supplied

FM SERIES 6" SINGLE-PHASE SUBMERSIBLE MOTORS

Motor Order No.	Rating						Rated Input		Maximum Load (SF Load)		Full Load Speed (RPM)	Locked Rotor Amps	Control Box Order No.
	HP	KW	Volts	Phase	Motor Dia. vs. Flange Dia.	Service Factor	Amps	Watts	Amps	Watts			
6F051	5	3.7	230	1	6" x 6"	1.15	22.8	4975	26.0	5625	3535	104	CB05MC3RF
6F071	7.5	5.5					35.2	7300	40.0	8300	3525	162	CB07MC3RF
6F101	10	7.5					45.7	9700	52.4	11175	3530	202	CB10MC3RF
6F151	15	11					62.4	13725	72.5	15825	3515	296	CB15MC3RF

FM SERIES 8" THREE-PHASE SUBMERSIBLE MOTORS

Motor Order No.	Rating						Rated Input		Maximum Load (SF Load)		Full Load Speed (RPM)	Locked Rotor Amps
	HP	KW	Volts	Phase	Motor Dia. vs. Flange Dia.	Service Factor	Amps	Watts	Amps	Watts		
86F504	50	37	460	3	8" x 6"	1.15	65	43675	74	49950	3520	540
86F604	60	45					78	52225	89	59825	3510	645
8F504	50	37			8" x 8"		65	43675	74	49950	3520	540
8F604	60	45					78	52225	89	59825	3510	645
8F754	75	56					95	64850	109	74650	3515	803
8F1004	100	75					128	85075	146	98350	3520	1080
8F1254	125	93					165	110125	188	126825	3520	1410
8F1504	150	112					203	133025	228	151100	3530	1643
86F505	50	37	575				52	43675	60	49950	3520	439
86F605	60	45					61	52225	70	59825	3510	518
8F505	50	37					52	43675	60	49950	3520	439
8F605	60	45					61	52225	70	59825	3510	518
8F755	75	56					76	64850	88	74650	3515	645
8F1005	100	75					100	85075	115	98350	3520	855
8F1255	125	93					129	110125	148	126825	3520	1133
8F1505	150	112					159	133025	178	151100	3530	1320

FM SERIES 6" THREE-PHASE SUBMERSIBLE MOTORS

Motor Order No.	Rating				Efficiency %		Power Factor %		Line to Line Resistance (Ohms)	KVA Code	Fuse Sizing Based on NEC		
	HP	kW	Volts	Phase	FL	SF	FL	SF			Standard Fuse	Dual Element Time Delay Fuse	Circuit Breaker
6F058	5	3.7	200-208	3	77.5	78.5	86.5	88.0	.86 - 1.1	H	60	35	50
6F078	7.5	5.5			80.0	80.0	87.5	88.5	.66 - .81	H	90	50	70
6F108	10	7.5			82.5	82.5	86.5	88.0	.37 - .46	H	110	70	100
6F158	15	11			83.5	83.5	87.0	88.5	.26 - .32	H	175	100	125
6F208	20	15			83.0	83.0	87.5	89.0	.19 - .24	H	225	125	175
6F258	25	19			84.0	84.0	85.5	87.5	.13 - .17	H	300	150	200
6F308	30	22			84.5	84.5	86.0	87.5	.10 - .13	H	350	200	250
6F0524*	5	3.7	230		77.5	78.5	86.5	88.0	1.1 - 1.4	H	60	35	45
6F0724*	7.5	5.5			80.0	80.0	87.5	88.5	.73 - .90	H	80	45	70
6F1024*	10	7.5			82.5	82.5	86.5	88.0	.50 - .62	H	100	60	90
6F1524*	15	11			83.5	83.5	87.0	88.5	.33 - .41	G	150	90	125
6F2024*	20	15			83.0	83.0	87.5	89.0	.25 - .31	G	200	110	175
6F2524*	25	19			84.0	84.0	85.5	87.5	.18 - .22	G	225	150	200
6F3024*	30	22			84.5	84.5	86.0	87.5	.15 - .19	G	300	175	225
6F0524*	5	3.7	460		77.5	78.5	86.5	88.0	4.4 - 5.4	H	30	15	25
6F0724*	7.5	5.5			80.0	80.0	87.5	88.5	2.9 - 3.6	H	40	25	35
6F1024*	10	7.5			82.5	82.5	86.5	88.0	1.9 - 2.4	H	50	30	40
6F1524*	15	11			83.5	83.5	87.0	88.5	1.1 - 1.4	G	70	45	60
6F2024*	20	15			83.0	83.0	87.5	89.0	.9 - 1.1	G	90	50	80
6F2524*	25	19			84.0	84.0	85.5	87.5	.69 - .85	G	110	70	100
6F3024*	30	22			84.5	84.5	86.0	87.5	.58 - .72	G	150	80	110
6F404	40	30			85.0	85.0	87.5	89.0	.45 - .56	G	175	100	150
6F504	50	37			84.0	84.0	87.0	88.0	.35 - .43	G	225	150	175
6F055	5	3.7	575		77.5	78.5	86.5	88.0	5.8 - 7.2	H	25	15	20
6F075	7.5	5.5			80.0	80.0	87.5	88.5	3.6 - 4.4	H	30	20	25
6F105	10	7.5			82.5	82.5	86.5	88.0	2.8 - 3.5	G	40	25	30
6F155	15	11			83.5	83.5	87.0	88.5	1.9 - 2.4	G	60	30	45
6F205	20	15			83.0	83.0	87.5	89.0	1.4 - 1.7	G	80	45	60
6F255	25	19			84.0	84.0	85.5	87.5	1.0 - 1.3	G	90	60	80
6F305	30	22			84.5	84.5	86.0	87.5	.83 - 1.0	G	110	70	90
6F405	40	30			85.0	85.0	87.5	89.0	.64 - .79	G	150	90	125
6F505	50	37			84.0	84.0	87.0	88.0	.53 - .71	H	175	100	150

* Same motor with voltage change device supplied

FM SERIES 6" SINGLE-PHASE SUBMERSIBLE MOTORS

Motor Order No.	Rating				Efficiency %		Power Factor %		Winding		KVA Code	Fuse Sizing Based on NEC		
	HP	kW	Volts	Phase	FL	SF	FL	SF	Main Resistance (Black-Yellow)	Start Resistance (Red-Yellow)		Stan-dard Fuse	Dual Element Time Delay Fuse	Circuit Breaker
6F051	5	3.7	230	1	74.5	75.5	97.0	97.0	.54 - .67	1.7 - 2.1	E	80	50	70
6F071	7.5	5.5			77.0	77.5	92.0	92.5	.36 - .44	.76 - .94	F	125	80	110
6F101	10	7.5			76.5	76.5	94.0	94.0	.25 - .31	.69 - .85	E	175	90	125
6F151	15	11			81.5	81.5	98.0	98.0	.22 - .28	.61 - .75	E	225	150	200

FM SERIES 8" THREE-PHASE SUBMERSIBLE MOTORS

Motor Order No.	Rating				Efficiency %		Power Factor %		Line to Line Resistance (Ohms)	KVA Code	Fuse Sizing Based on NEC		
	HP	kW	Volts	Phase	FL	SF	FL	SF			Standard Fuse	Dual Element Time Delay Fuse	Circuit Breaker
86F504	50	37	460	3	85.5	86	87	88	.19 - .24	K	250	175	225
86F604	60	45			85.5	86	88	88.5	.17 - .21		350	200	250
8F504	50	37			85.5	86	87	88	.19 - .24		250	175	225
8F604	60	45			85.5	86	88	88.5	.17 - .21		350	200	250
8F754	75	56			86.5	86.5	88.5	89	.12 - .15		400	225	350
8F1004	100	75			87.5	87.5	87.5	88.5	.08 - .11		500	300	450
8F1254	125	93			84.5	85	87	87.5	.06 - .08		700	400	600
8F1504	150	112			84.5	85	85.5	86.5	.04 - .06		800	450	700
86F505	50	37	575		85.5	86	87	88	.32 - .39		225	125	175
86F605	60	45			85.5	86	88	88.5	.26 - .32		250	150	200
8F505	50	37			85.5	86	87	88	.32 - .39		225	125	175
8F605	60	45			85.5	86	88	88.5	.26 - .32		250	150	200
8F755	75	56			86.5	86.5	88.5	89	.20 - .25		350	200	250
8F1005	100	75			87.5	87.5	87.5	88.5	.16 - .20		400	250	350
8F1255	125	93			84.5	85	87	87.5	.10 - .13	L	600	350	450
8F1505	150	112			84.5	85	85.5	86.5	.08 - .10	K	700	400	500

USE FOR CENTRIPRO FM SERIES 6" THREE-PHASE MOTORS

75° C Cable, 60 Hz (Service Entrance to Motor) Maximum Length in Feet

Motor Rating		75° C Insulation - AWG Copper Wire Size												
Volts	**HP**	**14**	**12**	**10**	**8**	**6**	**4**	**3**	**2**	**1**	**1/0**	**2/0**	**3/0**	**4/0**
230 V 60 Hz Three-Phase	5	134	213	339	537	835	1332	1674	2114	2663	3362	4241		
	7.5	0	142	226	359	558	890	1118	1412	1779	2246	2833	3577	45063
	10	0	0	173	274	427	681	856	10816	1361	1718	2168	2737	3448
	15	0	0	0	187	290	463	582	735	926	1169	1475	1862	2346
	20	0	0	0	0	221	353	443	560	705	890	1123	1418	1786
	25	0	0	0	0	0	282	355	448	564	712	898	1134	1429
	30	0	0	0	0	0	0	299	377	475	600	757	956	1204
460 V 60 Hz Three-Phase	5	538	855	1364	2161	3362								
	7.5	381	606	966	1530	2380	3794	4770						
	10	291	462	737	1168	1817	2897	3642	4600					
	15	0	298	475	752	1169	1864	2344	2960	3728	4706			
	20	0	0	371	588	915	1458	1833	2315	2917	3682	4645		
	25	0	0	0	470	731	1165	1465	1850	2330	2941	3711	4685	
	30	0	0	0	388	603	961	1209	1526	1923	2427	3062	3866	
	40	0	0	0	0	459	732	920	1161	1463	1847	2331	2942	3707
	50	0	0	0	0	0	571	718	906	1142	1441	1818	2296	2892
200-208 V 60 Hz Three-Phase	5	108	172	274	434	676	1077	1354	1710	2154	2719	3431	4331	
	7.5	0	0	184	292	453	723	909	1149	1447	1826	2304	2909	3665
	10	0	0	141	223	347	554	696	879	1108	1398	1764	2227	2806
	15	0	0	0	0	239	382	480	606	763	964	1216	1535	1933
	20	0	0	0	0	0	289	363	459	578	729	920	1162	1464
	25	0	0	0	0	0	0	281	356	448	566	714	901	1135
	30	0	0	0	0	0	0	0	298	375	473	598	755	951
575 V 60 Hz Three-Phase	5	827	1316	2099	3324									
	7.5	578	920	1467	2323	3615								
	10	456	725	1156	1831	2849	4542							
	15	314	500	798	1264	1966	3134	3940						
	20	0	361	576	912	1419	2261	2843	3590	4523				
	25	0	0	459	728	1132	1805	2269	2865	3609	4559			
	30	0	0	390	617	961	1531	1925	2431	3063	3866			
	40	0	0	0	457	711	1133	1424	1799	2266	2861	3609	4556	

USE FOR CENTRIPRO FM SERIES 6" SINGLE-PHASE MOTORS

75° C Cable, 60 Hz (Service Entrance to Motor) Maximum Length in Feet

Motor Rating		75° C Insulation - AWG Copper Wire Size												
Volts	**HP**	**14**	**12**	**10**	**8**	**6**	**4**	**3**	**2**	**1**	**1/0**	**2/0**	**3/0**	**4/0**
230V 60 Hz. Single Phase	5	0	0	210	332	517	825	1037	1309	1649	2082	2626	3315	4177
	7.5	0	0	0	216	336	536	674	851	1072	1353	1707	2155	2715
	10	0	0	0	0	257	409	514	650	818	1033	1303	1645	2073
	15	0	0	0	0	0	296	372	469	591	747	942	1189	1498

USE FOR CENTRIPRO FM SERIES 8" THREE-PHASE MOTORS

75° C Cable, 60 Hz (Service Entrance to Motor) Maximum Length in Feet

Motor Rating		75° C Insulation - AWG Copper Wire Size												
Volts	**HP**	**14**	**12**	**10**	**8**	**6**	**4**	**3**	**2**	**1**	**1/0**	**2/0**	**3/0**	**4/0**
460 V 60 Hz Three-Phase	50[1]	0	0	0	0	0	579	728	920	1159	1463	1846	2330	2935
	60[1]	0	0	0	0	0	0	606	765	964	1216	1534	1937	2441
	50[2]	0	0	0	0	0	579	728	920	1159	1463	1846	2330	2935
	60[2]	0	0	0	0	0	0	606	765	964	1216	1534	1937	2441
	75	0	0	0	0	0	0	0	625	787	993	1253	1582	1993
	100	0	0	0	0	0	0	0	0	0	741	935	1181	1488
	125	0	0	0	0	0	0	0	0	0	0	0	917	1155
	150	0	0	0	0	0	0	0	0	0	0	0	0	953
575 V 60 Hz Three-Phase	50	0	0	0	0	560	893	1123	1418	1787	2255	2845	3592	4525
	60	0	0	0	0	0	766	963	1216	1531	1933	2439	3079	3879
	75	0	0	0	0	0	0	766	967	1218	1538	1940	2449	3085
	100	0	0	0	0	0	0	0	740	932	1177	1484	1874	2361
	125	0	0	0	0	0	0	0	0	0	0	1153	1456	1835
	150	0	0	0	0	0	0	0	0	0	0	0	1211	1525

1 8"x6" Motor: 8 inch motor with 6 inch flange diameter/pump connection

2 8"x8" Motor: 8 inch motor with 8 inch flange diameter/pump connection

1Ø THREE-WIRE CONTROL BOX WIRING CHARTS
Quick Disconnect ½ – 1 HP

WIRING DIAGRAM

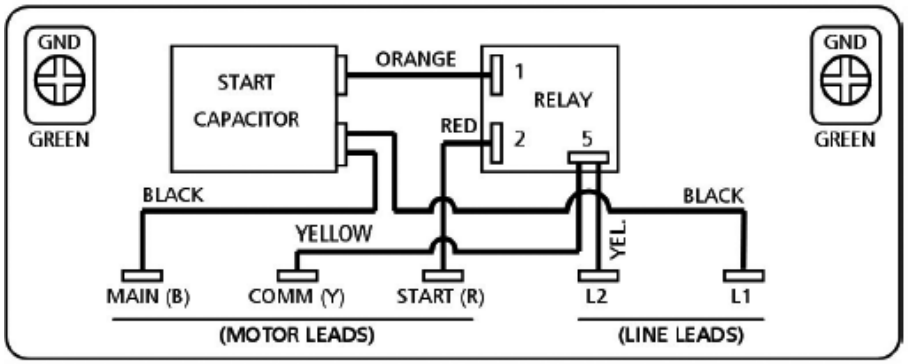

"K" REPAIR PARTS FOR QUICK DISCONNECT STYLE CONTROL BOXES

Order Number	HP	Volts	Capacitor Order Number	Start Capacitor Mfd	Capacitor Voltage / Quantity	Start Relay Order No.	Standard Circuit Breaker	Relay (Ohms) #2-#5
CB05411	.5	115	9K450	250 - 300	125 / 1	① 9K457	30	700 – 1800
						② 9K566		
CB05412	.5	230	9K448	59 - 71	250 / 1	① 9K462	15	4500 – 7000
CB07412	.75	230	9K449	86 - 103	250 / 1	② 9K567	20	
CB10412	1	230	9K447	105 - 126	250 / 1		25	

① First Design - prior to June 2009 - Relay tab on bottom, capacitor held by bracket and screw. See pictures below. 208 V use 9K461 relay.

② Current Design - post June 2009 - Relay tab on top and capacitors, all held by one screw. See pictures below. The relays are designed for operation in a specific orientation, therefore there are two different numbers now. 208 V use 9K568 relay.

First Design

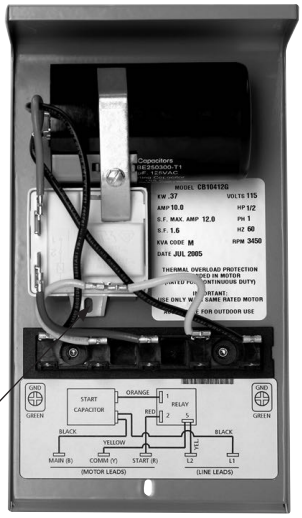

Tab Down ①

Current Design

Tab Up ②

CENTRIPRO QUICK DISCONNECT WITH PUMPSAVER INSIDER

CONNECTIONS:

1. Remove the cover from the front of the 3-wire CentriPro control box.
2. Remove the yellow wire from the terminal strip at L2.
3. Remove the black wire connecting L1 and the capacitor completely from the box.
4. Press the PumpSaver onto the L1 and L2 terminals.
5. Reconnect the yellow wire to L2 on the PumpSaver.
6. Connect the blue wire attached to the PumpSaver to the dual-lug terminal (with the black wire) of the capacitor.

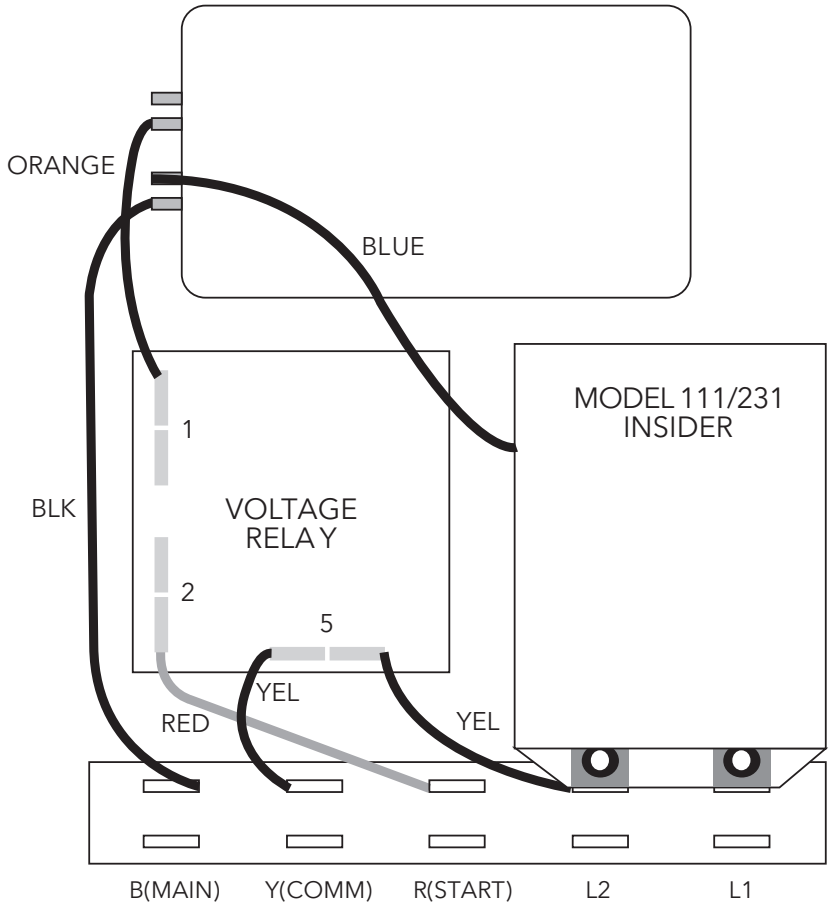

CENTRIPRO CONTROL BOX WITH INSIDER INSTALLED

CENTRIPRO QUICK DISCONNECT WITH QD PUMPTEC

CONNECTIONS:

1. Remove the cover from the front of the 3-wire CentriPro control box.
2. Remove the yellow wire from the terminal strip at L2.
3. Remove the black wire connecting L1 and the capacitor from L1.
4. Press the QD Pumptec onto the L1 and L2 terminals.
5. Reconnect the yellow wire to L2 on the QD Pumptec.
6. Connect the black wire from the capacitor to L1 on the QD Pumptec.

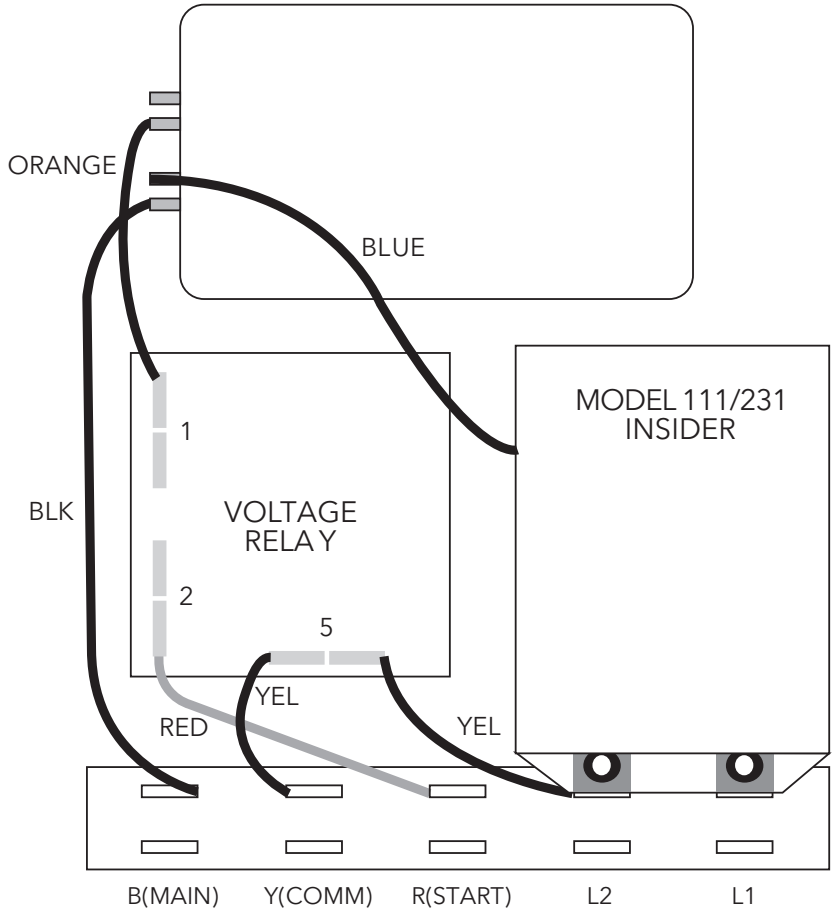

CENTRIPRO CONTROL BOX WITH QD PUMPTEC INSTALLED

CSCR 1Ø CONTROL BOXES CAPACITOR START - CAPACITOR RUN

FOR USE WITH 3 WIRE, 1Ø, 4" GOULDS WATER TECHNOLOGY MOTORS

Control Box Order Number	HP	KW	Volts	May Replace GP #	May Replace RJ #	Standard Circuit Breaker	Standard Fuse	Dual Element Time Delay Fuse	Enclosure Dimensions W x D x H (in)	Shipping Wt. (lbs)
CB05412CR	0.5	.37	230	–	50F311CB S50N1CB, A50N1CB	10	15	10	8.1 x 5.9 x 9.3	7
CB07412CR	.75	.55		–	75F311CB S75N1CB, A75N1CB	15	20			
CB10412CR	1	.75		–	S100F311CB S100N1CB, A100N1CB					
CB15412CR	1.5	1.1		00074	150F311CB S150N1CB, A150N1CB	25	30	15		
CB20412CR	2	1.5		00084	200F311CB S200N1CB, AS200T1CB			20		
CB30412CR	3	2.2		00094	300F311CB S300N1CB	40	45	25		
CB50412CR	5	3.7		00104	500F311CB S500N1CB	60	80	45		8

"K" REPAIR PARTS

Control Box Order Number	HP	Volts	Old Control Box Order Number	Capacitor Repair Part Number	Capacitor Mfd.	Capacitor Type	Capacitor Voltage	Capacitor Quantity	Overload Order Number ②	Start Relay Order Number ①
CB05412CR	.5	230	–	9K465	43-53	Start	250	1	N/A	9K458
				9K466	15	Run	370			
CB07412CR	.75		–	9K448	59-71	Start	250		N/A	9K458
				9K467	23	Run	370			
CB10412CR	1		–	9K449	86-103	Start	250		N/A	9K458
				9K467	23	Run	370			
CB15412CR	1.5		00074	9K447	105-126	Start	250		9K471	9K458
				9K466	15	Run	370			
CB20412CR	2		00084	9K447	105-126	Start	250		9K481	9K458
				9K451	20	Run	370			
CB30412CR	3		00094	9K453	208-250	Start	250		9K482	9K459
				9K454	45	Run	370			
CB50412CR	5		00104	9K455	270-324	Start	330		9K483	
				9K456	40	Run	370	2		

① If supply voltage is between 200V-210V a 208V start relay, order no. 9K479, is required.

② Overload for 2, 3, and 5 hp CSCR boxes are sold prewired and soldered as an assembly. No field soldering or wiring required.

MAGNETIC CONTACTOR (MC) CONTROL BOXES

FOR USE WITH 3 WIRE, 1Ø, 4" GOULDS WATER TECHNOLOGY MOTORS

Control Box Order Number	HP	KW	Volts	Replaces GP #	Replaces RJ #	MayReplace FE #	Standard Circuit Breaker	Standard Fuse	Dual Element Time Delay Fuse	Enclosure Dimensions W x D x H (in)	Shipping Wt. (lbs)
CB15412MC	1.5	1.1	230	No Equal	No Equal	No Equal	30	35	20	8.1 x 5.9 x 9.3	8
CB20412MC	2	1.5	230	00084MC	No Equal	2823018310	25	30	20		
CB30412MC	3	2.2	230	00094MC	S300N1CBC	2823028310	40	45	30		
CB50412MC	5	3.7	230	00104MC	S500N1CBC	2821139310	60	80	45	11 x 6.7 x 12.5	15

"K" REPAIR PARTS

Control Box Order Number	HP	KW	Volts	Capacitor Repair Part Number	Capacitor Type	Capacitor Mfd.	Capacitor Voltage	Capacitor Quantity	Contactor Order Number	Overload Order Number	Start Relay Order Number
CB15412MC	1.5	1.1	230	9K447	Start	105-126	250	1	9K485	9K493	9K458
				9K466	Run	15	370				
CB20412MC	2	1.5		9K447	Start	105-126	250			9K480 (S)	
				9K451	Run	20	370			9K472 (M)	
CB30412MC	3	2.2		9K453	Start	208-250	250			9K473 (S)	9K459
				9K454	Run	45	370			9K474 (M)	
CB50412MC	5	3.7		9K455	Start	270-324	330	1	9K486	9K475 (S)	
				9K456	Run	40	370	2		9K476 (M)	

Repair parts above are compatible with and replace parts in old Goulds Water Technology or Franklin Electric control boxes.

Order Number 9K479 for 200/208 Volt Start Relay.

CSCR AND MC CONTROL BOX CHECK OUT

CHECKING PROCEDURE: BE SURE POWER IS TURNED OFF.

A. Overload (push reset buttons to make sure contacts are closed)
   1. Ohmmeter setting: (R x 1)
   2. Terminal connections: ohmmeter leads to overload terminals.
   3. Ohmmeter reading: should not be over 0.5 ohms.

B. Capacitor (disconnect one lead from each capacitor prior to checking)
   1. Ohmmeter setting: (R x 1000).
   2. Terminal connections: individual capacitor terminals.
   3. Ohmmeter reading: pointer should swing toward zero then drift back toward infinity.

C. Relay coil (disconnect lead from terminal 5)
   1. Ohmmeter setting: (R x 1000).
   2. Terminal connections: “5” and “2” on relay.
   3. Ohmmeter reading: 4500-7000 ohms.

D. Relay contact (disconnect lead from terminal 1)
   1. Ohmmeter setting: (R x 1).
   2. Terminal connections; “1” and “2” on relay.
   3. Ohmmeter reading: should be zero.

E. Magnetic contactor only (disconnect 1 coil lead)
   1. Ohmmeter setting: (R x 100).
   2. Check coil resistance: 180-1400 ohms.
   3. Remove contact cover and inspect contacts.

½, ¾ AND 1 HP – 1Ø CSCR CONTROL BOX WIRING DIAGRAMS

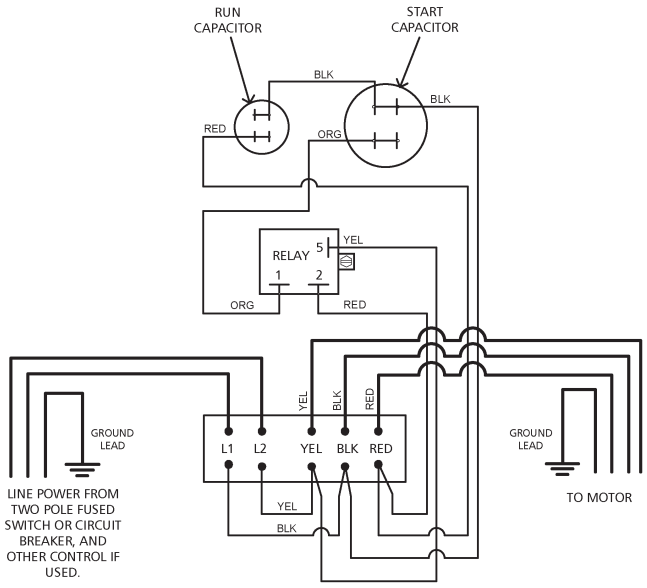

1Ø CONTROL BOX WIRING DIAGRAMS

1½ HP STANDARD

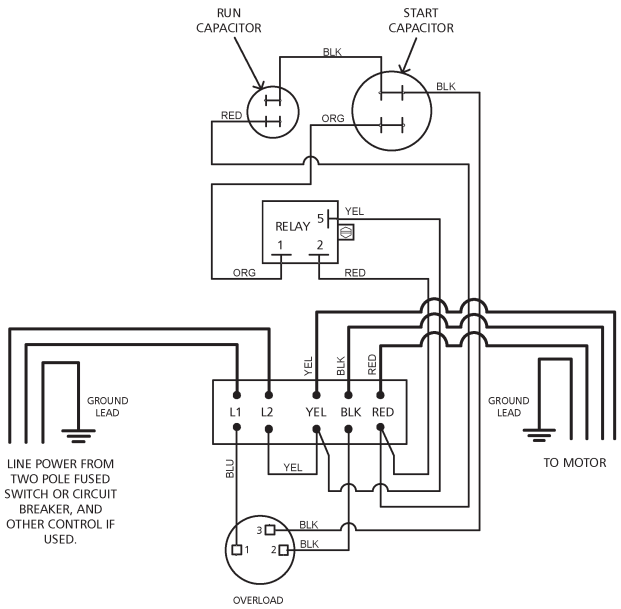

1½ HP WITH MAGNETIC CONTACTOR

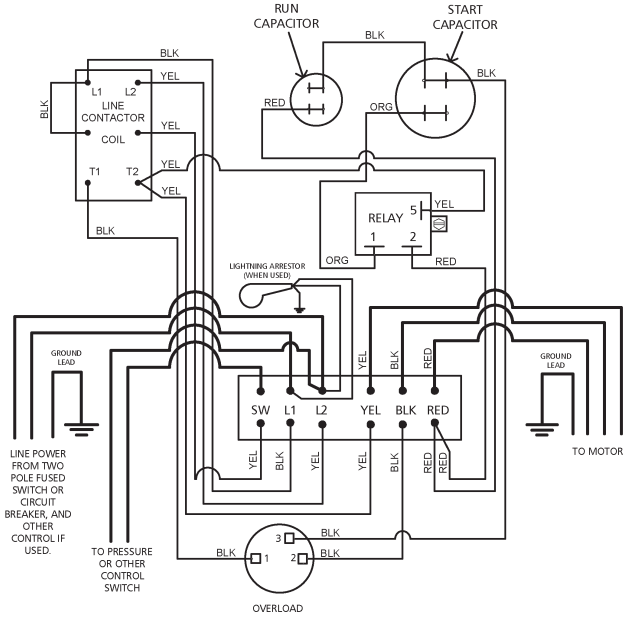

2 HP STANDARD

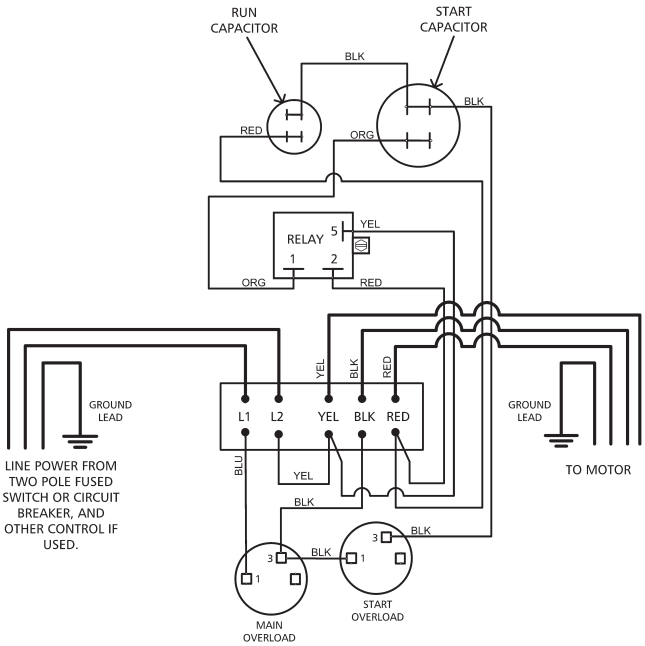

2 HP WITH MAGNETIC CONTACTOR

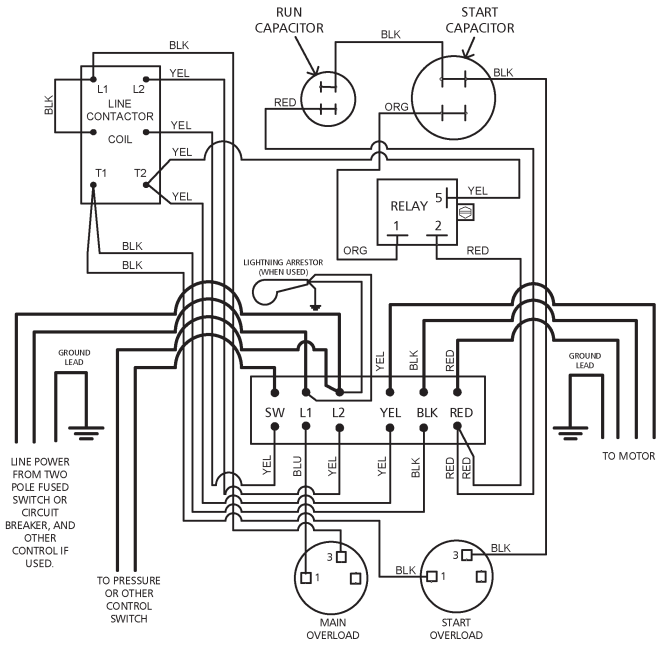

1Ø CONTROL BOX WIRING DIAGRAMS

3 HP STANDARD

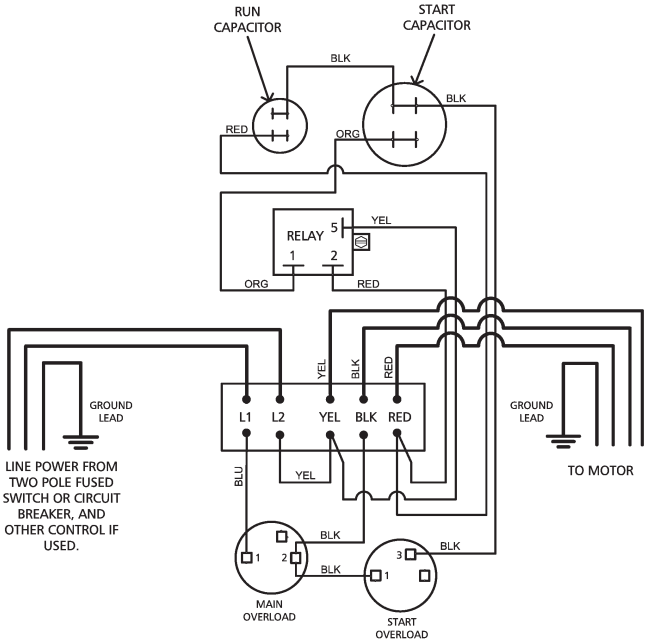

3 HP WITH MAGNETIC CONTACTOR

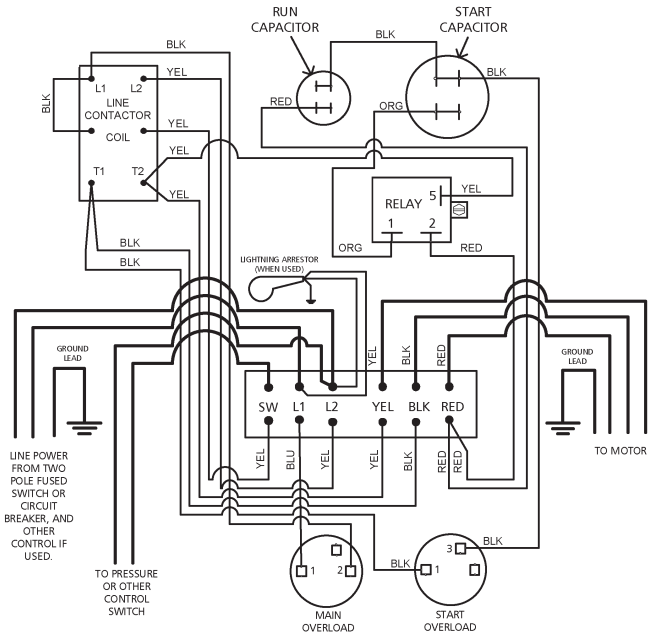

5 HP STANDARD

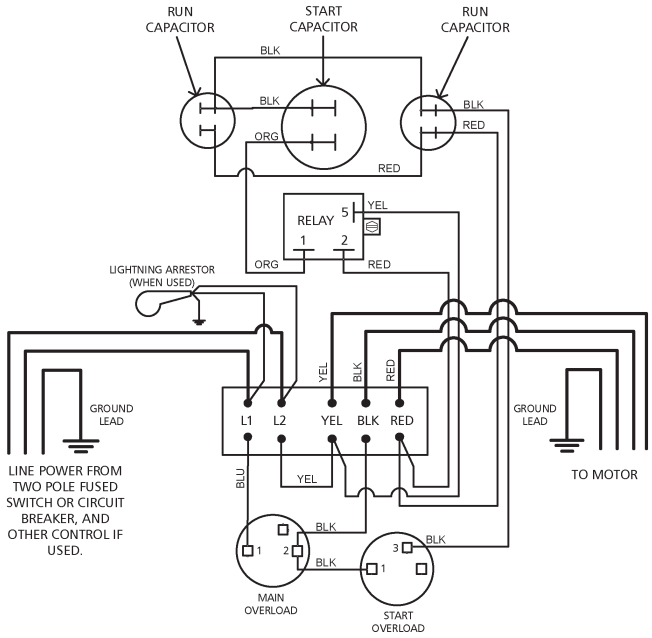

5 HP WITH MAGNETIC CONTACTOR

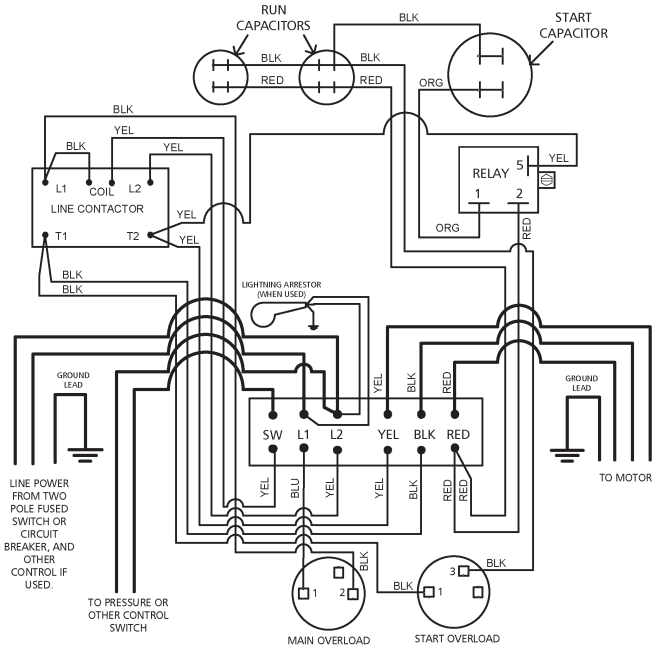

PUMP TROUBLESHOOTING

DISCONNECT AND LOCKOUT ELECTRICAL POWER BEFORE ATTEMPTING ANY SERVICE. FAILURE TO DO SO CAN CAUSE SHOCK, BURNS OR DEATH.

Symptom	Probable Cause	Recommended Action
PUMP MOTOR NOT RUNNING	1. Motor thermal protector tripped a. Incorrect control box b. Incorrect or faulty electrical connections c. Faulty thermal protector d. Low voltage e. Ambient temperature of control box/ starter too high f. Pump bound by foreign matter g. Inadequate submergence	1. Allow motor to cool, thermal protector will automatically reset a – e. Have a qualified electrician inspect and repair, as required f. Pull pump, clean, adjust set depth as required g. Confirm adequate unit submergence in pumpage
	2. Open circuit breaker or blown fuse	2. Have a qualified electrician inspect and repair, as required
	3. Power source inadequate for load	3. Check supply or generator capacity
	4. Power cable insulation damage 5. Faulty power cable splice	4 – 5. Have a qualified electrician inspect and repair, as required
LITTLE OR NO LIQUID DELIVERED BY PUMP	1. Faulty or incorrectly installed check valve	1. Inspect check valve, repair as required
	2. Pump air bound	2. Successively start and stop pump until flow is delivered
	3. Lift too high for pump	3. Review unit performance, check with dealer
	4. Pump bound by foreign matter	4. Pull pump, clean, adjust set depth as required
	5. Pump not fully submerged	5. Check well recovery, lower pump if possible
	6. Well contains excessive amounts of air or gases	6. If successive starts and stops does not remedy, well contains excessive air or gases
	7. Excessive pump wear	7. Pull pump and repair as required
	8. Incorrect motor rotation – three-phase only.	8. Reverse any two motor electrical leads

AQUAVAR SOLO² DATA

CONTROLLER, BREAKER, GENERATOR SIZING

Motor		Controller Model ②				Circuit Breaker ③	Generator ④ (VA)
HP	Voltage ①	1AS15	3AS20	3AS30	3AS50		
½	230					15	2200
	200						
¾	230						2900
	200						
1	230						3500
	200						
1½	230					20	4400
	200						
2	230					30	6100
	200						
3	230						8100
	200						
						40	
5	230					50	13300
	200						

① Supply voltage must be 196 VAC – 265 VAC.

② Shaded areas indicate which controller models can be used with which motors. Lighter shading indicates combinations where controller will limit peak performance to 85% of catalog value for pump/motor.

③ Circuit Breaker or Dual Element Time Delay Fuse Size (Amps) protecting branch circuit supplying controller.

④ Minimum size of Single-Phase 240 V generator required.

WIRE SIZING – MAXIMUM CABLE LENGTHS IN FEET TO LIMIT VOLTAGE DROP TO 5% FOR 230 V SYSTEMS ⑤

Service Entrance to Controller

Controller Input	Motor HP	Copper Wire Size 75°C Insulation Exposed to a Maximum of 50°C (122°F) Ambient Temperature ⑥																	
		14	12	10	8	6	4	3	2	1	1/0	2/0	3/0	4/0	250	300	350	400	500
230V 1 PH	½	366	583	925	1336	2107	3345	4175	5267	6637	8364								
	¾	279	445	706	1020	1608	2552	3186	4019	5065	6383	8055							
	1	226	360	571	824	1300	2064	2576	3250	4095	5161	6513	8201						
	1½	*	**286**	455	657	1036	1644	2052	2589	3262	4111	5188	6533	8236	9710				
	2	*	*	331	478	754	1197	1495	1886	2376	2995	3779	4759	5999	7073	8455	9852		
	3	*	*	**246**	355	561	890	1111	1401	1766	2225	2808	3536	4458	5256	6283	7321	8343	
	5	*	*	*	**218**	**343**	545	680	858	1081	1363	1720	2165	2730	3219	3847	4483	5109	6348

Controller to Motor

Controller Output	Motor HP	Copper Wire Size 75°C Insulation Exposed to a Maximum of 50°C (122°F) Ambient Temperature ⑥																	
		14	12	10	8	6	4	3	2	1	1/0	2/0	3/0	4/0	250	300	350	400	500
230V 3 PH	½	905	1442	2290	3306	5213	8276												
	¾	690	1100	1748	2523	3978	6316	7884	9945										
	1	558	890	1413	2040	3216	5106	6375	8041										
	1½	445	709	1126	1625	2562	4068	5078	6406	8072									
	2	324	516	820	1184	1866	2963	3699	4666	5879	7410	9351							
	3	241	384	609	880	1387	2202	2749	3467	4369	5506	6949	8750						
	5	*	235	373	539	849	1348	1683	2123	2675	3372	4255	5358	6755	7964	9520			

⑤ Reduce lengths by 13% for 200 V systems. ⑥ Lengths in bold require 90°C wire. Shading indicates 40° C maximum ambient. * Wire does not meet the N.E.C. ampacity requirement.

The lengths in each of the wire sizing tables represent 100% of the allowable voltage drop when motor is running at full load. When sizing wire, the voltage drop of each wire segment must be included. The total must not exceed 100% of the allowable drop. Take for example a 1.5 hp motor with a distance from service entrance to controller of 100' and 500' between the controller and motor.

- Service entrance to controller = 100' of 10 AWG (100/455) = 22 % (455' is from the S.E. to controller chart)
- Controller to motor = 500' of 12 AWG (500/709) = 71 % (709' is from the controller to motor chart)

Total drop (must be ≤ 100%) 93 %

If the distance from the controller to motor was 600' (600/709) = 85% + 22% = 107%, we would need to use #10 wire for that segment, ex. 600/1126 = 53% + 22% (for 100' of #10) = 75% which is acceptable. It is also acceptable to use different wire sizes for the buried and well sections of wire.

AQUAVAR SOLO[2] AND BALANCED FLOW REPAIR PARTS

(See Repair Part Price Book for current prices.)

Order Number	Description
6K210	Gauge Guard - Transducer Protector
9K518	100 PSI Transducer 0.5 – 4.5V
9K519	200 PSI Transducer 0.5 – 4.5V
9K520	300 PSI Transducer 0.5 – 4.5V
9K523	10 Bar Transducer 0.5 – 4.5V (145 PSI)
9K524	SOLO and Balanced Flow Screw Repair Kit
9K525	SOLO and Balanced Flow Fan Repair Kit
9K545	10' Transducer Cable with Ground and GRN. Clamp
9K546	15' Transducer Cable with Ground and GRN. Clamp
9K547	25' Transducer Cable with Ground and GRN. Clamp
9K548	50' Transducer Cable with Ground and GRN. Clamp
9K549	100' Transducer Cable with Ground and GRN. Clamp
9K576	150' Transducer Cable with Ground and GRN. Clamp
9K577	200' Transducer Cable with Ground and GRN. Clamp
9K550	AquaBoost UIB
9K552	Balanced Flow and Aquavar SOLO UIB
9K575	Balanced Flow and Aquavar SOLO (all sizes) R05 Programmer
9K585	Water Sensor with Relay Contact
9K589	Over-Pressure Switch, 60-120 PSI, Balanced Flow or S-Drive

SERVICE FACTOR AMPS ALL MOTORS

HP	230 Volt									200 Volt	
	1Ø 2-Wire			1Ø 3-Wire			3Ø			3Ø	
	GWT[1]	Franklin	Grundfos	GWT	Franklin	Grundfos	GWT	Franklin	Grundfos	GWT	Franklin
½	4.7/4.7	6	6	6.3	6	6	N/A	N/A	N/A	N/A	N/A
¾	6.4/6.2	8	8.4	8.3	8	8.4	3.9	3.8	N/A	4.5	4.4
1	9.1/8.1	9.8	9.8	9.7	9.8	9.8	4.7	4.7	N/A	5.5	5.4
1½	11.0/10.4	13.1[2]	13.1[2]	11.1	11.5	11.6	6.1	5.9	7.3	7.2	6.8
2	N/A	N/A	N/A	12.2	13.2[2]	13.2[2]	7.6	8.1	8.7	8.8	9.3
3	N/A	N/A	N/A	N/A	N/A	N/A	10.1	10.9	12.2	12	12.5
5	N/A	N/A	N/A	N/A	N/A	N/A	17.5	17.8	19.8[2]	20.2[2]	20.5[2]

1. 2-Wire motors have Generation 1 and Generation 2 amp ratings, see motor nameplate or motor data sticker that was supplied with motor.
2. Amps are higher than controller overload range - use of these motors will current limit and provide reduced performance.

THREE-PHASE MOTOR OPERATION ON VFD'S

Variable Frequency Drive's (VFD) can be used with the three-phase Goulds Water Technology motor provided the operator meets the following criteria:

1) Maintain frequencies from 30 Hz – 60 Hz. Do not operate below 30 Hz for more than one second. 80 Hz operation can be used.
2) Ensure VFD is a PWM, IGBT, Volts per Hz scalar type and does not produce more than 500 volts dV/dt.
3) Use a load reactor (load filter) of 3% impedance or more on motor lead lengths of 50 wire feet or more. The Balanced Flow product already includes this in all models.
4) Follow all NEC, state, local or provincial electrical codes for power conversion equipment wiring and installation.
5) Provide appropriate dedicated short circuit protection. Properly sized fuses or breaker disconnects.
6) Size wire according to NEC, state, local or provincial codes OR refer to manufacturers recommendation for wiring sizing.
7) Ensure proper flow around motor.
8) Maintain proper grounding of the motor back to drive and service entrance. Common ground throughout system!

The following are some installation issues we have seen on returned Balanced Flow controllers which factory re-testing has shown to operate perfectly:

Symptom	Cause
• Cycling, won't turn off, poor pressure control	Incorrect tank pre-charge pressure
• Cycling and wide pressure swings	Larger than recommended tank
• Poor performance	Motor running backwards

Performance Improvement Suggestions:

- Installing a spring check valve on the pump side of the tank can reduce time to standby when flow stops.
- Poor pressure control can be caused by a clogged sensor. Not an issue for sensors April 2009 and later.
- Updating controllers built prior to April 2009 with latest software, UIB and sensor will improve reliability and performance.
- Updating software in controllers built after April 2009 may improve performance.
- Many generators produce voltages that exceed the 264VAC max rating of the controller. Test the generator output voltage when no load is connected. If the voltage exceeds 264VAC, do not use it with the Balanced Flow controller!

AQUAVAR SOLO² TROUBLESHOOTING

The Status Indicator and Parameter Display are visible through the cover lable to indicate the system status, i.e. running, stopped or faulted. When faulted, the status indicator light will be red and the Parameter Display will show the error code in the format F00 where "F" indicates fault and "00" will be the fault code number. The Status Indicator will flash the error code as the number of flashes followed by a one second pause. The number of flashes can be from two to nine. The error code will be repeated until the fault is cleared. The following describes state of the Status Indicator and Parameter Display duing various conditions and faults:

NO LIGHT			
Parameter Display	**Status Indicator**	**Controller Status**	**Description**
No Light	No Light	Low/No Input Voltage	Check the input voltage to the controller. Measure the voltage between L1 and L2 using an AC Voltmeter. This voltage should be greater than 190Vac.
PrOG	No Light	Program Mode	The controller is set to programming mode when the Programming Position (located in the upper-left corner of the UIB) pins are connected together at power up. To remove the controller from Program Mode, remove the jumper/ connection connecting the Programming Position pins, turn off power to the controller, wait one minute, turn on power to the controller.
GREEN LIGHT CODES			
Parameter Display	**Status Indicator**	**Controller Status**	**Description**
Various	Constant Green	Standby/Low Voltage	Constant Green Light indicates the pump is in Standby mode with the pump stopped. The system is in Standby mode when there is no flow in the system and the pressure setting has been reached. It is also possible the system is in a Low Voltage condition where the line input voltage is between 85-190VAC.
StOP	Constant Green	Pump Stopped	A Constant Green Status Indicator along with a StOP message on the Parameter Display indicates that the Run/ Stop input is open which forces the pump to stop. Check the device controlling the Run/Stop Input for proper operation. Verify the input is wired correctly. The Run/Stop Input wiring must never be installed in the same conduit as power wiring and there must be a minimum of 12" between the Run/Stop Input wiring and the power wires.
Various	Blinking Green	Pump Running	Flashing Green Light indicates the pump is running.
RED LIGHT CODES			
Parameter Display Fault Code	**Flashes**	**Controller Status**	**Description** This information is to be used by professional installers or qualified personnel only.
F01	Constant Red	Controller Error To clear fault perform a System Reset, or turn off power to controller, wait one minute, turn on power to controller. If fault persists contact installer.	Internal controller fault. To clear the fault, turn off power to the controller, wait one minute, turn on power to the controller. If fault persists Replace controller.

AQUAVAR SOLO² TROUBLESHOOTING

FAULT BLINK CODES *(continued)*

RED LIGHT CODES			
Parameter Display Fault Code	**Flashes**	**Controller Status**	**Description** This information is to be used by professional installers or qualified personnel only.
F02	2 Blinks	Dry Well No Water/Loss of Prime The Dry Well Function is configured using the dSEt parameter group in the Advanced Menu. If fault persists contact installer.	This fault can be caused by: • Water supply level in well falls below suction inlet of pump. • Plugged suction screen. • Restriction in pipe between pump and pressure sensor. • Air bound pump – see "Purging System" • Incorrect setting of "MAXIMUM SPEED" switch. Be sure to set the "MAXIMUM SPEED" switch to 80 Hz when using mismatched pumps (water ends) and motors. • Incorrect setting of "MOTOR OVERLOAD SETTING (SFA)" switch. Ensure the Motor Overload Setting (SFA) Switch is not set higher than the Service Factor Amps (SFA) listed on the motor nameplate. **Refer to the dSEt menu for details on configuring the Dry Well Function. The controller may automatically restart if Progressive (ProG) or Fixed Time (Ft) restart is selected.** If nuisance tripping continues after adequate water supply has been verified: • Set the Dry Well Sensitivity switch to LOW • Measure the maximum possible output current for the system. Set the MOTOR OVERLOAD Setting according to this value instead of motor SFA. • Turn the Dry Well Function off by selecting OFF in the dSEt parameter group in the Advanced Menu. Dry Well can be reset by pressing both pushbuttons at the same time or by turning off the power to the controller.
F03	3 Blinks	Sensor Fault The controller will not run if the signal from the sensor is disconnected or out of tolerance. The controller will automatically restart when the signal is within tolerance. If fault persists contact installer.	This fault can be caused by: • Disconnected sensor. Disconnect sensor from sensor cable connector and reconnect to ensure a good connection. • Disconnected sensor cable lead inside the controller. Check for loose wires where the sensor cable connects to the circuit board by tugging on each wire. • Broken wire in the sensor cable. • Miswired sensor cable. Check that the wires are connected to the correct terminals on the sensor connector. The correct location of the wires is indicated on the circuit board. B=Black, R=Red, W=White, G=Green. • Failed sensor. With the sensor cable connected to the circuit board, measure the DC voltage between the black and white wires of the sensor cable at the sensor connector. The voltage measured should be between 0.5Vdc and 4.5Vdc depending on the system pressure, see chart below. • A vacuum on the sensor (transducer) of 17" Hg or more will cause a sensor fault, eliminate the vacuum. **NOTE:** Ensure the Transducer Jumper is properly placed for the application. Refer to the Transducer Jumper Section for details.

AQUAVAR SOLO² TROUBLESHOOTING

FAULT BLINK CODES *(continued)*

RED LIGHT CODES			
Parameter Display Fault Code	**Flashes**	**Controller Status**	**Description** This information is to be used by professional installers or qualified personnel only.
F03	3 Blinks	Sensor Fault *(continued)* 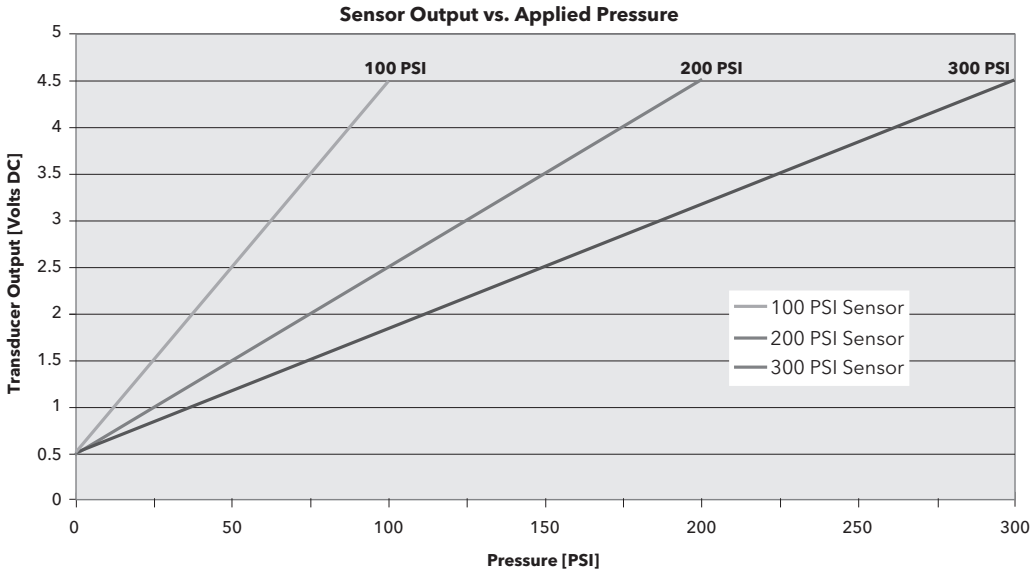 	
F04	4 Blinks	Over Current The controller has turned off the motor to protect it against damage due to an over current or overload condition. If three Over Current faults are detected, the controller will need to be manually reset. If fault persists contact installer.	This fault can be caused by: • Using wrong motor (wrong voltage or phase). • Mechanical binding from debris in pump. • Electrical or mechanical failure of the motor. • Incorrect setting of "MOTOR OVERLOAD SETTING (SFA)" switch. The controller will issue an Over Current fault if the switch is set too low. The controller estimates the motor temperature by comparing the output current to the Motor Overload Setting and monitoring the output frequency. If the motor runs at high output or is current limiting the motor temperature estimate increases. If the temperature estimate is too high the controller stops the motor and issues an Over Current fault. The controller will automatically clear the fault and restart the motor after the motor temperature estimate reaches an acceptable level. If three Over Current faults are detected then the controller must be manually reset by turning off power to the controller for one minute and then on. The controller stores the motor temperature estimate. If the controller has tripped on the Over Current fault and power is turned off and then on, the will not restart unless the motor temperature estimate is within an acceptable range.

AQUAVAR SOLO² TROUBLESHOOTING

FAULT BLINK CODES *(continued)*

RED LIGHT CODES			
Parameter Display Fault Code	**Flashes**	**Controller Status**	**Description** This information is to be used by professional installers or qualified personnel only.
F05	5 Blinks	Short Circuit The controller will not restart if displaying this fault. To clear the fault perform a system reset, or turn off power to the controller, wait 1 minute, turn on power to the controller. If fault persists contact installer.	**WARNING** Repeated exposure to short circuit conditions can damage the controller. Do not reset this fault without fixing the short circuit condition more than twice. This fault can be caused by: • Electrical failure of the motor. • Electrical failure of wiring between controller and motor. Verify the error by turning power to controller off for 1 minute and then on. If error persists, motor and wiring between controller and motor must be checked. Turn power off for 5 minutes. Remove the motor wires from the output terminal block. Check wiring and motor for shorting phase to phase and phase to ground. Perform the tests described in the Insulation and Winding Resistance Tests section of this manual. Refer to motor's manual for information on resistance readings.
F06	6 Blinks	Ground Fault The controller will not restart if displaying this fault. To clear the fault perform a system reset, or turn off power to the controller, wait 1 minute, turn on power to the controller. If fault persists contact installer.	**WARNING** Repeated exposure to ground fault conditions can damage the controller. Do not reset this fault without fixing the ground fault condition more than twice. **WARNING** This device does not provide personnel protection against shock. This function is intended for equipment protection only. This fault can be caused by: • Electrical failure of the motor • Electrical failure of wiring between controller and motor. • Miswiring of motor cable. Verify the error by turning power to controller off for 1 minute and then on. If error persists, motor and wiring between controller and motor must be checked. Turn power off and wait 5 minutes. Remove the motor wires from the output terminal block. Perform the tests described in the Insulation and Winding Resistance Tests of this manual.
F07	7 Blinks	Temperature The controller will automatically restart when the temperature reaches an acceptable level. If fault persists contact installer.	This fault can be caused by: • High ambient temperature. The maximum ambient temperature rating is 122° F (50° C). • Low ambient temperature. The minimum ambient temperature rating is -4° F (-20° C). Check for a fan failure. The fan will turn on when the temperature inside the controller reaches 140° F (60° C). The fan will turn on for 1 second each time the controller starts the motor. The fan will run for 10 seconds during the first start of the motor after power up. If the fan never turns on, check fan connections and replace as needed. Ensure that the fan is not bound or clogged.

AQUAVAR SOLO² TROUBLESHOOTING

FAULT BLINK CODES *(continued)*

RED LIGHT CODES			
Parameter Display Fault Code	**Flashes**	**Controller Status**	**Description** This information is to be used by professional installers or qualified personnel only.
F08	8 Blinks	Open Lead The controller will not restart if displaying this fault. To clear the fault perform a system reset, or turn off power to the controller, wait 1 minute, turn on power to the controller. If fault persists contact installer.	This fault can be caused by: • Disconnected or broken wire between the controller and motor. Verify the error by turning power to controller off for 1 minute and then on. If error persists, motor and wiring between controller and motor must be checked. Turn power off for 5 minutes. Remove the three motor wires from the terminal block. Using an ohmmeter, measure the resistance from phase to phase. A disconnected or broken wire will be indicated by a high resistance reading (20 ohms or higher).
F09	9 Blinks	Low Pressure Cut-Off The controller will not restart if displaying this fault. To clear the fault perform a system reset, or turn off power to the controller, wait 1 minute, turn on power to the controller. If fault persists contact installer.	This fault can be caused by: • Pressure 20 psi below set point for 30 seconds. May be a broken pipe or tripped pressure relief valve. If 20 psi or more pressure drop for 30 seconds is normal for the system, switch the Low Pressure Cut-Off protection off or change system to prevent the pressure drop.

MEASURING INSULATION RESISTANCE

1. Set the scale lever to R x 100K (R x 100,000) and set the ohmmeter on zero.

   WARNING **Open (turn off) master breaker or disconnect all leads from starter or control box to avoid damage to meter or electric shock hazard.**

2. Connect an ohmmeter lead to any one of the motor leads and the other to the metal drop pipe. If the drop pipe is plastic, connect the ohmmeter lead to the metal well casing or ground wire.

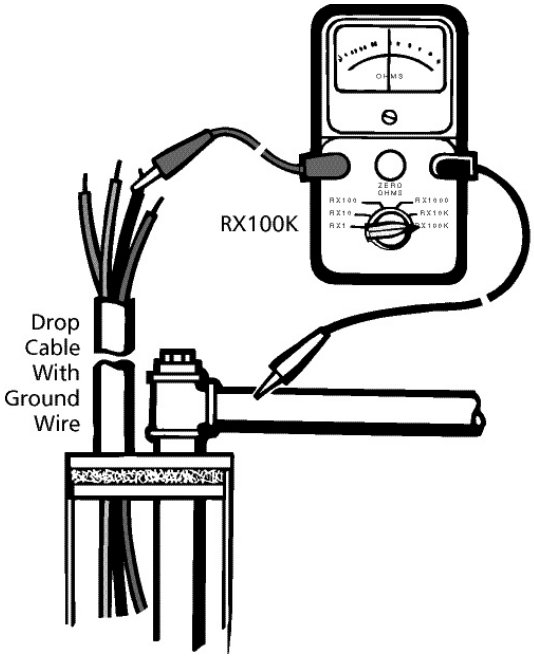

Megger

What It Means –

1. If the ohm value is normal, the motor windings are not grounded and the cable insulation is not damaged.
2. If the ohm value is below normal, either the windings are grounded or the cable insulation is damaged. Check the cable at the well seal as the insulation is sometimes damaged by being pinched.

TABLE 1 – Normal Ohm and Megohm Values (Insulation Resistance) Between All Leads and Ground

Insulation resistance does not vary with rating. All motors of all hp, voltage and phase rating have similar values of insulation resistance.

Condition of Motor and Leads	Ohm Value	Megohm Value
A new motor (without drop cable).	20,000,000 (or more)	20.0
A used motor which can be reinstalled in the well.	10,000,000 (or more)	10.0
Motor in Well. Ohm readings are for drop cable plus motor. A new motor in the well.	2,000,000 (or more)	2.0
A motor in the well in reasonably good condition.	500,000 - 2,000,000	0.5 - 2.0
A motor which may have been damaged by lightning or with damaged leads. Do not pull the pump for this reason.	20,000 - 500,000	0.02 - 0.5
A motor which definitely has been damaged or with damaged cable. The pump should be pulled and repairs made to the cable or the motor replaced. The motor will not fail for this reason alone, but it will probably not operate for long.	10,000 - 20,000	0.01 - 0.02
A motor which has failed or with completely destroyed cable insulation. The pump must be pulled and the cable repaired or the motor replaced.	Less than 10,000	0 - 0.01

MOTOR WINDING RESISTANCE CHECKOUT

Measuring Winding Resistance

1. Set the scale lever to R x 1 for values under 10 ohms. For values over 10 ohms, set the scale lever to R x 10. Zero balance the ohmmeter as described earlier on page 11.

   ⚠CAUTION **Open master breaker and disconnect all leads from control box to pressure switch (Q-D type control, remove lid) to avoid damage to meter or electric shock hazard.**

2. Connect the ohmmeter leads as shown below.

TABLE 2 – Cable Resistance – Copper

Cable Size	DC Resistance of Cable per 100 Foot Length Ohms per Pair of Leads
14	.544
12	.338
10	.214
8	.135
6	.082
4	.052
2	.032

If aluminum cable is used the readings will be higher. Divide the ohm readings on this chart by 0.61 to determine the actual resistance of aluminum cable.

See motor data pages for motor resistance ratings.

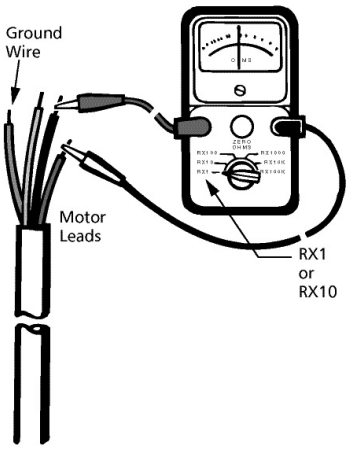

RULE OF THUMB

Add resistance of drop cable when checking pump in well. See Table 2 above.

CABLE CHECKOUT

Checking Cable and Splice

1. Submerge cable and splice in steel barrel of water with both ends out of water.
2. Set ohmmeter selector on RX100K and adjust needle to zero (0) by clipping ohmmeter leads together.
3. After adjusting ohmmeter, clip one ohmmeter lead to barrel and the other to each cable lead individually, as shown.
4. If the needle deflects to zero (0) on any of the cable leads, pull the splice up out of the water. If the needle falls back to (∞) (no reading) the leak is in the splice.
5. If leak is not in the splice, pull the cable out of the water slowly until needle falls back to (∞) (no reading). When the needle falls back, the leak is at that point.
6. If the cable or splice is bad, it should be repaired or replaced.

Checking Cable and Splice Test

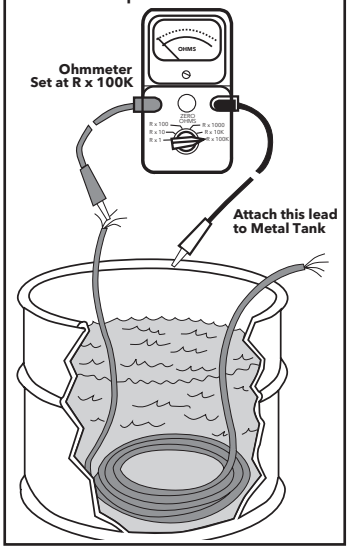

What It Means –

1. If all ohm values are normal, the motor windings are neither shorted nor open, and the cable colors are correct.
2. If any one ohm value is less than normal, the motor is shorted.
3. If any one ohm value is greater than normal, the winding or the cable is open or there is a poor cable joint or connection.
4. If some ohm values are greater than normal and some less, the leads are mixed.

AMPROBE INSTRUCTIONS

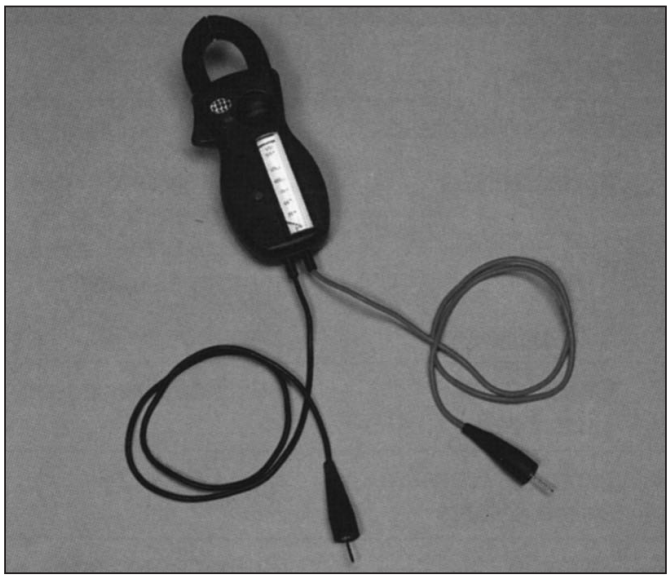

The Amprobe is a multi-range, combination ammeter and voltmeter.

Voltmeter Scales:	150 VOLTS	600 VOLTS
Ammeter Scales:	5 AMPS 15 AMPS	40 AMPS 100 AMPS

1. When used as an ammeter, the tongs are placed around the wire being measured with the rotary scale on the 100 amp range. Then rotate the scale back to the smaller ranges until an exact reading is indicated.
2. When used as a voltmeter, the two leads are clipped into the bottom of the instrument with the rotary scale on the 600 volt range. If the reading is less than 150 volts, rotate the scale to the 150 volt range to get a more exact reading.

OHMMETER INSTRUCTIONS

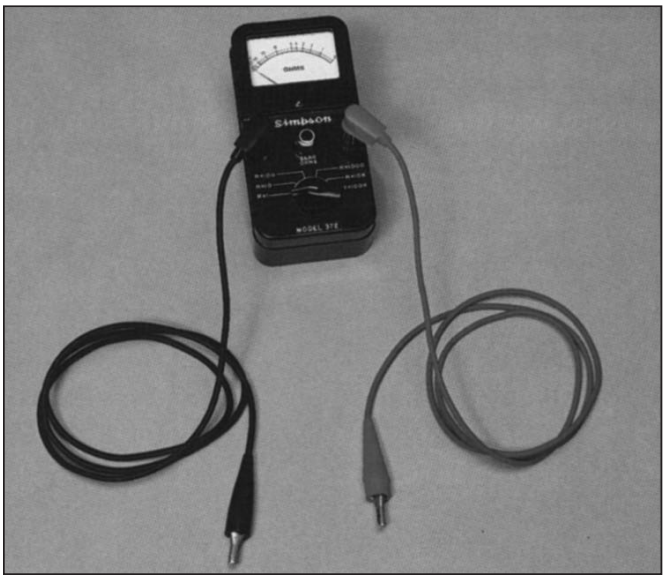

The ohmmeter is used for measuring the electrical resistance of a wire circuit. The unit of measurement is called an ohm.

1. The knob at the bottom of the ohmmeter is adjustable through six ranges:

   RX_1 = R x 1
   RX_{10} = R x 10
   RX_{100} = R x 100
   RX_{1000} = R x 1,000
   RX_{10K} = R x 10,000
   RX_{100K} = R x 100,000

   If your ohmmeter is digital readout type, refer to the instructions that came with it.

2. The round center knob is for the purpose of adjusting the instrument to zero (0) after clipping the two ohmmeter leads together. **This must be done every time the range selection is changed.**

⚠CAUTION **Use ohmmeter only with POWER OFF.**

FUSE CHECKOUT

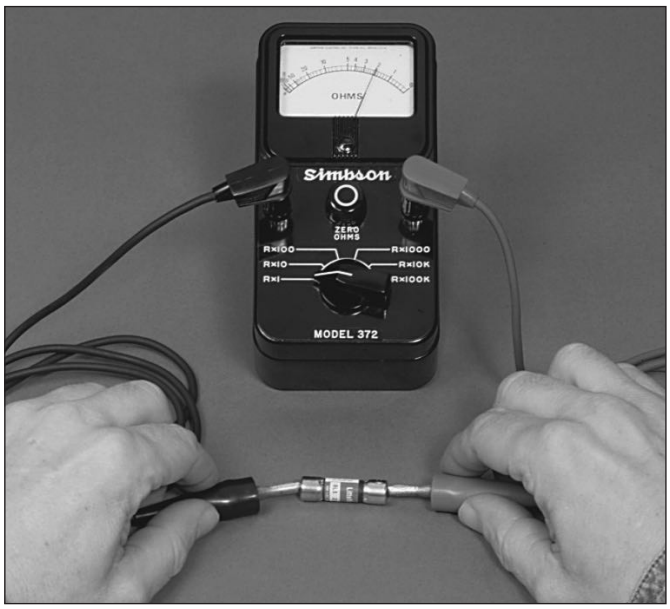

1. Set R x 1.
2. Connect leads as shown.
3. Reading: Should register zero.

What It Means –

Zero reading indicates fuse OK. Infinity (∞) reading indicates bad fuse.

THREE-PHASE STARTER COIL CHECKOUT

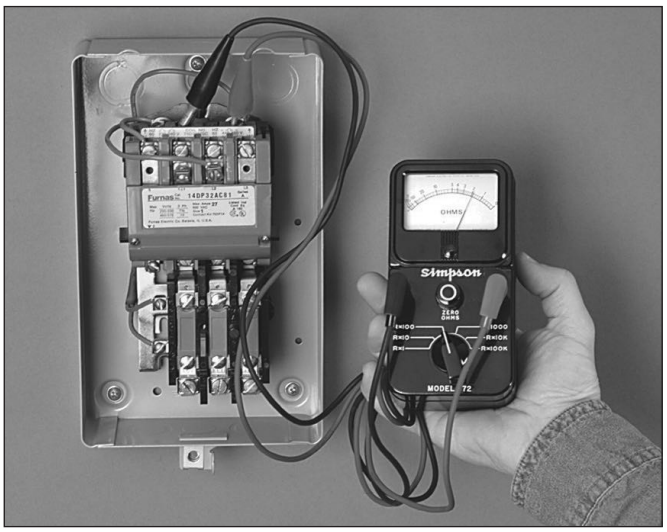

WARNING **Open master breaker and disconnect all leads from starter to avoid damage to meter or electric shock hazard. Connect the ohmmeter leads as shown above.**

Coil with Ohmmeter

1. Set R x 1,000.
2. Connect leads as shown.
3. Reading: Should register some value, Approximately 200-1000 ohms.

What It Means –

Infinity reading indicates coil is open. Zero reading indicates coil is shorted. In either case, the coil should be replaced.

A reading of 200-1000 ohms indicates coil is ok.

THREE-PHASE STARTER VOLTAGE CHECKOUT

Checking Voltage at Fused Disconnect and Magnetic Starter

WARNING **POWER IS ON during voltage checking.**

1. To check voltage: Use voltmeter on L1, L2 and L3 in sequence. Check should be made at four locations.
   Step 1 Checking incoming power supply.
   Step 2 Checking fuses.
   Step 3 Checking contact points
   Step 4 Checking heaters.
2. When checking voltage, all other major electrical appliances (that could be in use at the same time) should be running.
3. If incoming power supply readings are not within the limits (see chart), call your power supplier.

Voltage Limits		
Name Plate ▼	Measured Volts	
	Minimum	Maximum
208V 3Ø	188	228
230V 3Ø	207	253
460V 3Ø	414	506
575V 3Ø	518	632

NOTE: Phase to phase – full line voltage. Phase to neutral – ½ full line voltage. (depending on transformer connection)

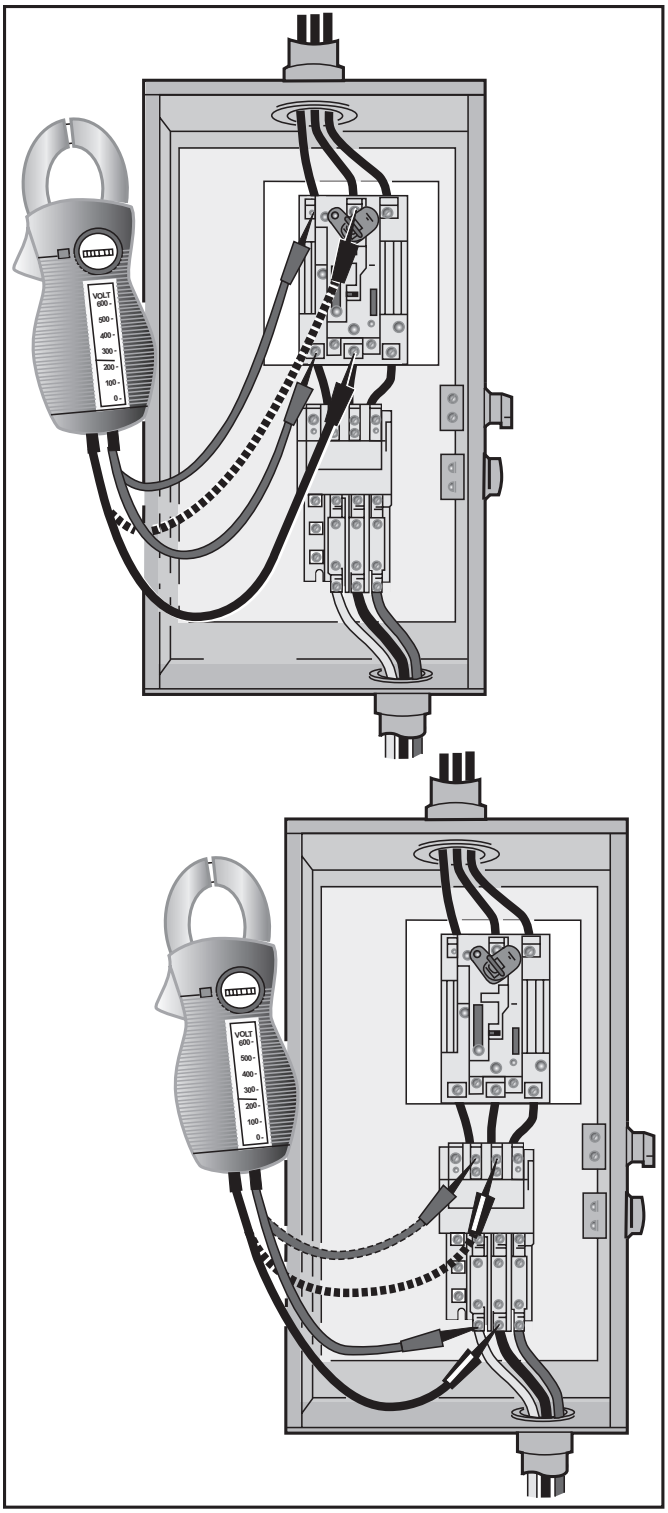

RULE OF THUMB

Incoming power should be within 5% of power supply voltage. Motors are rated ±10% of nameplate. The other 5% is used for cable voltage drop.

TRANSFORMER SIZES

A full three-phase supply is recommended for all three-phase motors, consisting of three individual transformers or one three-phase transformer. "Open" delta or wye connections using only two transformers can be used, but are more likely to cause problems from current unbalance.

Transformer ratings should be no smaller than listed in the table for supply power to the motor alone.

TRANSFORMER CAPACITY REQUIRED FOR SUBMERSIBLE MOTORS

Submersible 3Ø Motor HP Rating	Total Effective KVA Required	Smallest KVA Rating – Each Transformer	
		Open WYE DELTA 2 Transformers	WYE or DELTA 3 Transformers
1½	3	2	1
2	4	2	1½
3	5	3	2
5	7½	5	3
7½	10	7½	5
10	15	10	5
15	20	15	7½
20	25	15	10
25	30	20	10
30	40	25	15
40	50	30	20
50	60	35	20
60	75	40	25
75	90	50	30
100	120	65	40

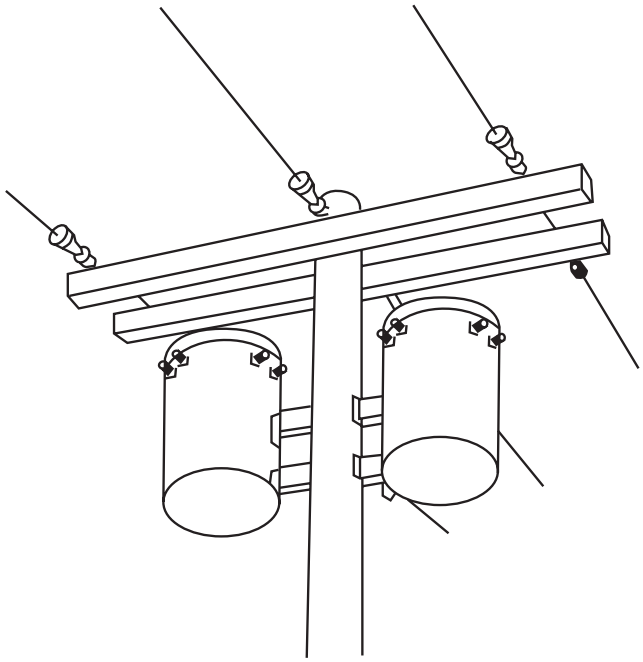

OPEN DELTA OR WYE

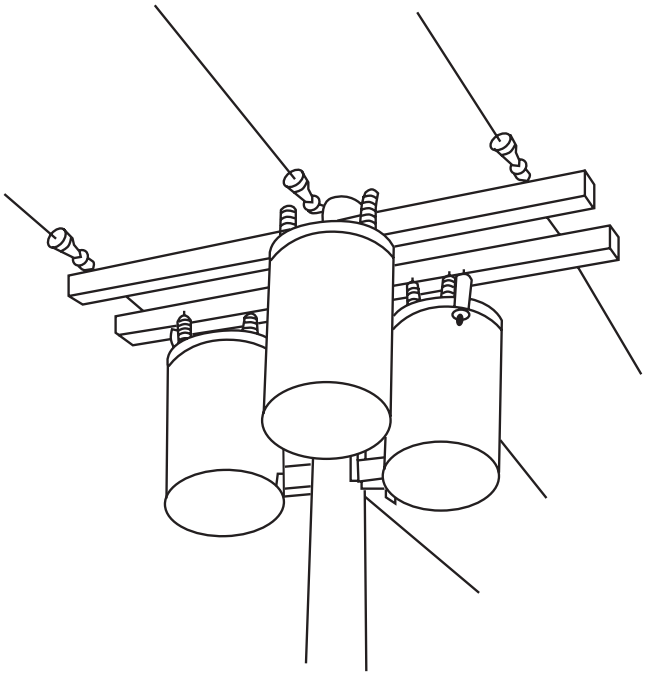

FULL Three-Phase

THREE-PHASE POWER UNBALANCE

A full three-phase supply is recommended for all three-phase motors, consisting of three individual transformers or one three-phase transformer. So-called "open" delta or wye connections using only two transformers can be used, but are more likely to cause problems, such as poor performance overload tripping or early motor failure due to current unbalance.

Transformer ratings should be no smaller than listed on Transformer Size Chart on previous page.

Checking and correcting rotation and current unbalance

1. Establish correct motor rotation by running in both directions. Change rotation by exchanging any two of the three motor leads. The rotation that gives the most water flow is always the correct rotation.
2. After correct rotation has been established, check the current in each of the three motor leads and calculate the current unbalance as explained in 3 below.

   If the current unbalance is 2% or less, leave the leads as connected.

   If the current unbalance is more than 2%, current readings should be checked on each leg using each of the three possible hook-ups. Roll the motor leads across the starter in the same direction to prevent motor reversal.
3. To calculate percent of current unbalance:
   A. Add the three line amp values together.
   B. Divide the sum by three, yielding average current.
   C. Pick the amp value which is furthest from the average current (either high or low).
   D. Determine the difference between this amp value (furthest from average) and the average.
   E. Divide the difference by the average. Multiply the result by 100 to determine percent of unbalance.
4. Current unbalance should not exceed 5% at service factor load or 10% at rated input load. If the unbalance cannot be corrected by rolling leads, the source of the unbalance must be located and corrected. If, on the three possible hookups, the leg farthest from the average stays on the same power lead, most of the unbalance is coming from the power source. However, if the reading farthest from average moves with the same motor lead, the primary source of unbalance is on the "motor side" of the starter. In this instance, consider a damaged cable, leaking splice, poor connection, or faulty motor winding.

Phase designation of leads for CCW rotation viewing shaft end.

To reverse rotation, interchange any two leads.

Phase 1 or "A" – Black Motor Lead or T1

Phase 2 or "B" – Yellow Motor Lead or T2

Phase 3 or "C" – Red Motor Lead or T3

Notice: Phase 1, 2 and 3 may not be L1, L2 and L3.

	Hookup 1			Hookup 2			Hookup 3		
	L1	L2	L3	L1	L2	L3	L1	L2	L3
Starter Terminals	T1	T2	T3	T1	T2	T3	T1	T2	T3
Motor Leads	R	B	Y	Y	R	B	B	Y	R
	T3	T1	T2	T2	T3	T1	T1	T2	T3

Example:

T3-R = 51 amps	T2-Y = 50 amps	T1-B = 50 amps
T1-B = 46 amps	T3-R = 48 amps	T2-Y = 49 amps
T2-Y = 53 amps	T1-B = 52 amps	T3-R = 51 amps
Total = 150 amps	Total = 150 amps	Total = 150 amps
÷ 3 = 50 amps	÷ 3 = 50 amps	÷ 3 = 50 amps
– 46 = 4 amps	– 48 = 2 amps	– 49 = 1 amps
4 ÷ 50 = .08 or 8%	2 ÷ 50 = .04 or 4%	1 ÷ 50 = .02 or 2%

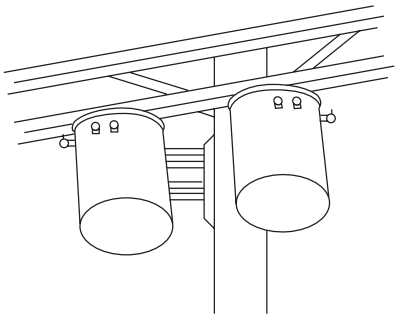

OPEN DELTA OR WYE

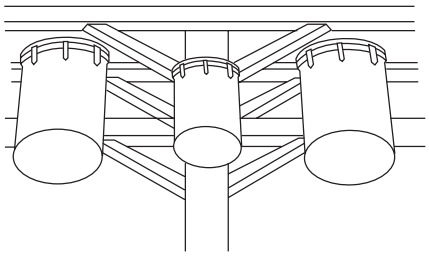

FULL THREE PHASE

GENERATOR SIZING

Note: Always consult the generator manufacturer whenever questions arise.

These sizing charts are recommendations based on motor service factor loading for typical continuous duty generators. If you need to call the generator manufacturer, be prepared to tell them the motor KVA code, the service factor amperage, locked rotor amperage, phase, Hz, motor type, etc. This information can all be found in this manual.

Please note that the 2-wire chart is only for PSC (permanent split capacitor) type, 2-wire motors and should not be used for split-phase, 2-wire motors. If using split-phase, 2-wire motors the generator should be 50% larger than that listed for a 3-wire motor.

You must know which type generator you have before using the charts as the required generator size varies by type. Internally regulated generators are also called self-excited. Externally regulated generators are the most common. In addition to the Kw/KVA rating, the generator frequency (Hz, typically 60 Hz in USA) is very important when operating pumping equipment because frequency variations affect pump output in direct relation to the pump Affinity Laws. Operating under 60 Hz will reduce flow and head while operating over 60 Hz will increase flow, head, HP and amp draw and could overload the motor.

The generator should always be started before the pump/motor is started and always stop the pump/motor before shutting down the generator. Operating generators at higher elevations or using natural gas a fuel can affect performance, consult the generator manufacturer for their recommendations in these instances.

GENERATOR RECOMMENDATIONS

Motor	HP	Externally Regulated		Internally Regulated	
		KW	KVA	KW	KVA
		Minimum Generator Rating			
PSC Type 2-Wire 1Ø	.5	2.5	3.1	1.75	2.2
	.75	3.5	4.4	2.5	3.1
	1	5	6.3	3.2	4
	1.5	6	7.5	4	5
3-Wire 1Ø and 3Ø Motors	.5	2	2.5	1.5	1.9
	.75	3	3.8	2	2.5
	1	4	5	2.5	3.2
	1.5	5	6.3	3	3.8
	2	7.5	9.4	4	5
	3	10	12.5	5	6.3
	5	15	18.8	7.5	9.4
	7.5	20	25	10	12.5
	10	30	37.5	15	18.8
	15	40	50	20	25
	20	60	75	25	31
	25	75	94	30	37.5
	30	100	125	40	50
	40	100	125	50	62.5
	50	150	188	60	75
	60	175	220	75	94
	75	250	313	100	125
	100	300	375	150	188
	125	375	469	175	219
	150	450	563	200	250
	175	525	656	250	313
	200	600	750	275	344

HEAD AND PRESSURE EQUIVALENTS

1. Feet Head of Water and Equivalent Pressures
To change head in feet to pressure in pounds, multiply by .434

Feet Head	PSI	Feet Head	PSI	Feet Head	PSI	Feet Head	PSI
1	.43	30	12.99	140	60.63	300	129.93
2	.87	40	17.32	150	64.96	325	140.75
3	1.30	50	21.65	160	69.29	350	151.58
4	1.73	60	25.99	170	73.63	400	173.24
5	2.17	70	30.32	180	77.96	500	216.55
6	2.60	80	34.65	190	82.29	600	259.85
7	3.03	90	38.98	200	86.62	700	303.16
8	3.46	100	43.31	225	97.45	800	346.47
9	3.90	110	47.64	250	108.27	900	389.78
10	4.33	120	51.97	275	119.10	1000	433.09
20	8.66	130	56.30	–	–	–	–

2. Pressure and Equivalent Feet Head of Water
To change pounds pressure to feet head, multiply by 2.3

PSI	Feet Head	PSI	Feet Head	PSI	Feet Head	PSI	Feet Head
1	2.31	20	46.18	120	277.07	225	519.51
2	4.62	25	57.72	125	288.62	250	577.24
3	6.93	30	69.27	130	300.16	275	643.03
4	9.24	40	92.36	140	323.25	300	692.69
5	11.54	50	115.45	150	346.34	325	750.41
6	13.85	60	138.54	160	369.43	350	808.13
7	16.16	70	161.63	170	392.52	375	865.89
8	18.47	80	184.72	180	415.61	400	922.58
9	20.78	90	207.81	190	438.90	500	1154.48
10	23.09	100	230.90	200	461.78	1000	2309.00
15	34.63	110	253.98	–	–	–	–

APPROXIMATE COST OF OPERATING ELECTRIC MOTORS

Motor HP	*Average kilowatts input or cost based on 1 cent per kilowatt hour		Motor HP	*Av. kw input or cost per hour based on 1 cent per kw hour
	1 Phase	3 Phase		3 Phase
⅓	.408		20	16.9
½	.535	.520	25	20.8
¾	.760	.768	30	26.0
1	1.00	.960	40	33.2
1½	1.50	1.41	50	41.3
2	2.00	1.82	60	49.5
3	2.95	2.70	75	61.5
5	4.65	4.50	100	81.5
7½	6.90	6.75	125	102
10	9.30	9.00	150	122
			200	162

CENTRIPRO OR SQUARE "D" SWITCHES

Adjust in proper sequence:

1. CUT-IN: Turn nut down for higher cut-in pressure, or up for lower cut-in.
2. CUT-OUT: Turn nut down for higher cut-out pressure, or up for lower cut-out.

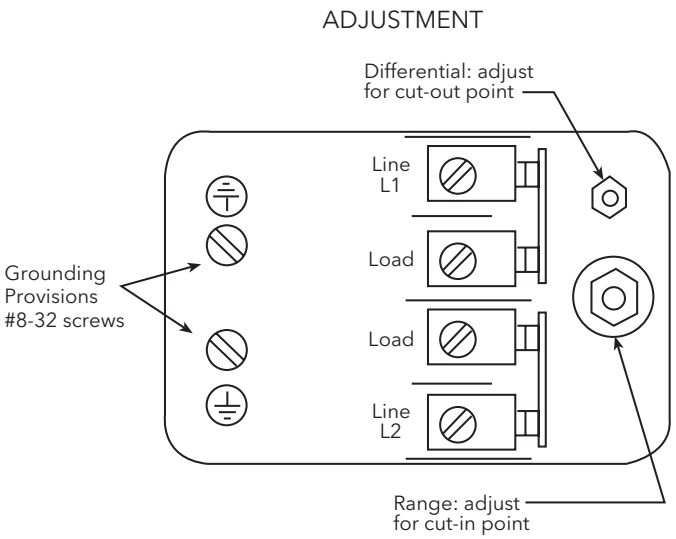

FURNAS PRO CONTROL

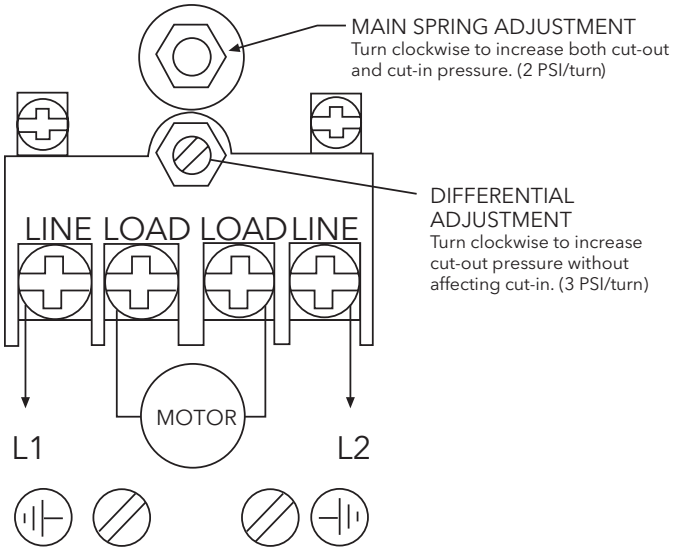

BASIC FORMULAS AND SYMBOLS

Formulas

$$GPM = \frac{Lb./Hr.}{500 \times Sp.\ Gr.}$$

$$H = \frac{2.31 \times psi}{Sp.\ Gr.}$$

$$H = \frac{1.134 \times In.\ Hg.}{Sp.\ Gr.}$$

$$H_V = \frac{V^2}{2g} = 0.155\ V^2$$

$$V = \frac{GPM \times 0.321}{A} = \frac{GPM \times 0.409}{(I.D.)^2}$$

$$BHP = \frac{GPM \times H \times Sp.\ Gr.}{3960 \times Eff.}$$

$$Eff. = \frac{GPM \times H \times Sp.\ Gr.}{3960 \times BHP}$$

$$N_S = \frac{N\sqrt{GPM}}{H^{3/4}}$$

$$H = \frac{V^2}{2g}$$

Symbols

GPM	=	gallons per minute
Lb.	=	pounds
Hr.	=	hour
Sp. Gr.	=	specific gravity
H	=	head in feet
psi	=	pounds per square inch
In. Hg.	=	inches of mercury
h_v	=	velocity head in feet
V	=	velocity in feet per second
g	=	32.16 ft./sec.^{2} (acceleration of gravity)
A	=	area in square inches (πr^2) (for a circle or pipe)
ID	=	inside diameter in inches
BHP	=	brake horsepower
Eff.	=	pump efficiency expressed as a decimal
N_S	=	specific speed
N	=	speed in revolutions per minute
D	=	impeller in inches

TERMS AND USABLE FORMULAS

BASIC FORMULAS AND SYMBOLS

Temperature conversion

DEG. C= (DEG. F – 32) x .555

DEG. F = (DEG. C x 1.8) + 32

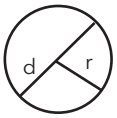

CIRCLE

Area of a Circle

A = area;C = circumference.

$A = \pi r^2$; $\pi = 3.14$

$C = 2\pi r$

D = diameter

r = radius

Water Horsepower $= \frac{\text{GPM x 8.33 x Head}}{33000} = \frac{\text{GPM x Head}}{3960}$	Where: GPM = Gallons per Minute 8.33 = Pounds of water per gallon 33000 = Ft. Lbs. per minute in one horsepower Head = Difference in energy head in feet (field head).
Laboratory BHP $= \frac{\text{Head x GPM x Sp. Gr.}}{\text{3960 x Eff.}}$ Field BHP = Laboratory BHP + Shaft Loss Total BHP = Field BHP + Thrust Bearing Loss	Where: GPM = Gallons per Minute Head = Lab. Head (including column loss) Eff. = Lab. Eff. of Pump Bowls Shaft Loss = HP loss due to mechanical friction of lineshaft bearings Thrust Bearing Loss = HP Loss in driver thrust bearings (See (1) below under Misc.)
Input Horsepower $= \frac{\text{Total BPH}}{\text{Motor Eff.}}$	Motor Eff. from Motor mfg. (as a decimal)
Field Efficiency $= \frac{\text{Water Horsepower}}{\text{Total BHP}}$	Water HP as determined above Total BHP as determined above
Overall Plant Efficiency $= \frac{\text{Water Horsepower}}{\text{Input Horsepower}}$	(See (2) below under Misc.) Water HP as determined above Input HP as determined above

Electrical

Input Horsepower $= \frac{\text{BHP}}{\text{Mot. Eff.}} = \frac{\text{4.826 x K x M x R}}{\text{T}} = \frac{\text{1.732 x E x I x PF}}{746}$

- BHP = Brake Horsepower as determined above
- Mot. Eff. = Rated Motor Efficiency
- K = Power Company Meter Constant
- M = Power Company Meter Multiplier, or Ratio of Current and Potential Transformers connected with meter
- R = Revolutions of meter disk
- T = Time in Sec. for R
- E = Voltage per Leg applied to motor
- I = Amperes per Leg applied to motor
- PF = Power factor of motor
- 1.732 = Factor for 3-phase motors. This reduces to 1 for Single-Phase motors

Kilowatt input to Motor $= .746 \text{ x I.H.P.} = \frac{\text{1.732 x E x I x PF}}{1000}$

KW-Hrs. Per 1000 Gallons of Cold Water Pumped Per Hour $= \frac{\text{HD in ft. x 0.00315}}{\text{Pump Eff. x Mot. Eff.}}$

Miscellaneous

(1) Thrust Bearing Loss = .0075 HP per 100 RPM per 1000 lbs. thrust.*

(2) Overall Plant Efficiency sometimes referred to as "Wire to Water" Efficiency

*Thrust (in lbs.) = (thrust constant (k) laboratory head) + (setting in feet x shaft wt. per ft.)

Note: Obtain thrust constant from curve sheets

Discharge Head (in feet of fluid pumped) $= \frac{\text{Discharge Pressure (psi) x 2.31}}{\text{Sp. Gr. of Fluid Pumped}}$

HYDROPRO AND CENTRIPRO TANK SELECTION

TABLE 1 – TANK MODELS – See the Full Line Catalog Tank Bulletins for a listing of all available models.

Model No.	Total Volume (Gals.)	① Drawdown in Gals. at System Operating Pressure Range of			Maximum Drawdown Volume (Gallons)
		18/40 PSIG	28/50 PSIG	38/60 PSIG	
V6P	1.9	0.7	0.6	0.5	1.3
V15P	4.9	1.8	1.5	1.4	3.1
V25P	7.3	2.7	2.3	2.1	3.1
V45P	13.9	5.6	4.7	4.1	8.4
V45	13.9	5.6	4.7	4.1	8.4
V60B	19.9	8.0	6.8	5.8	12.1
V60	19.9	8.0	6.8	5.8	12.1
V80	25.9	10.4	8.8	7.6	13.9
V80EX	25.9	10.4	8.8	7.6	13.9
V100	31.8	12.8	10.8	9.4	13.8
V100S	31.8	12.8	10.8	9.4	13.8
V140B	45.2	18.2	15.4	13.3	27.3
V140	45.2	18.2	15.4	13.3	27.3
V200	65.1	26.2	22.1	19.2	39.3
V250	83.5	33.6	28.4	25.6	50.8
V260	84.9	34.1	28.9	25.0	44.7
V350	115.9	46.6	39.4	34.1	70.5

Tank Drawdown Pressure Factors Using an "Extra" 2 PSI of Drawdown

Pressure Differential	Factor with extra 2 psi*
18 – 40	.402
28 – 50	.340
38 – 60	.295
48 – 70	.260

To Calculate drawdown capacity multiply: Factor x Tank Volume.

① Drawdown based on a 22 psi differential and Boyle's Law. Temperature, elevation and pressure can all affect drawdown volume.

TABLE 2 – PRESSURE FACTORS

Pump Cut-Out Pressure – PSIG	Pump Cut-In Pressure – PSIG																			
	20	25	30	35	40	45	50	55	60	65	70	75	80	85	90	95	100	105	110	115
30	.22																			
35	.30	.20																		
40	.37	.27	.18																	
45	.42	.34	.25	.17																
50	.46	.39	.31	.23	.15															
55	.50	.43	.36	.29	.22	.14														
60	.54	.47	.40	.33	.27	.20	.13													
65		.50	.44	.38	.31	.25	.19	.13												
70		.53	.47	.41	.35	.30	.24	.18	.12											
75			.50	.45	.39	.33	.28	.22	.17	.11										
80			.53	.48	.42	.37	.32	.26	.21	.16	.11									
85				.50	.45	.40	.35	.30	.25	.20	.15	.10								
90				.53	.48	.43	.38	.33	.29	.24	.19	.14	.10							
95					.50	.46	.41	.36	.32	.27	.23	.18	.14	.09						
100					.52	.48	.44	.39	.35	.31	.26	.22	.17	.13	.09					
105						.50	.46	.42	.38	.33	.29	.25	.21	.17	.13	.08				
110						.52	.46	.44	.40	.36	.32	.28	.24	.20	.16	.12				
115							.50	.46	.42	.39	.35	.31	.27	.23	.19	.15	.12	.06		
120							.52	.48	.45	.41	.37	.33	.30	.26	.22	.19	.15	.11		
125								.50	.47	.43	.39	.36	.32	.29	.25	.21	.16	.14	.11	.07

To determine tank drawdown of operating pressure ranges other than those listed in table, use following procedure:
Multiply total tank volume (table 1) by pressure factor (table 2).

Example: Operating range: 35/55
Tank being used: V-200

65.1 = Total volume of tank (table 1)
x .29 Pressure factor (table 4)
18.9 = Drawdown in gallons at 35/55 PSI operating range.

JET PUMP MOTOR DATA AND ELECTRICAL COMPONENTS

MOTOR DATA

GWT Number	HP	Volts	Phase	Service Factor	Maximum Load Amps	Watts	Circuit Breaker
J04853	½	115/230	1	1.6	10.8/5.4	880	25/15
J05853	¾	115/230	1	1.5	14.8/7.4	1280	30/15
J06853	1	115/230	1	1.4	16.2/8.1	1440	30/20
J07858	1½	115/230	1	1.3	20.0/10.0	1866	40/20
J08854	2	115/230	1	1.2	22.6/11.3	2100	25/15
J09853	3	230	1	1.15	13.3	3280	30
J04853L	½	115/230	1	1.6	10.8/5.4	968	25/15
J05853L	¾	115/230	1	1.5	14.8/7.4	1336	30/15
J06853L	1	115/230	1	1.4	16.2/8.1	1592	30/20
J07858L	1½	115/230	1	1.3	21.4/10.7	1950	40/20
①J08854L	2	230	1	1.2	12.9	2100	25
SFJ04853	½	115/230	1	1.6	9.4/4.7	900	20/10
SFJ05853	¾	115/230	1	1.5	13.6/6.8	1160	25/15
SFJ06853	1	115/230	1	1.4	15.8/7.9	1400	30/20
SFJ04860	½	115/230	1	1.6	12.6/6.3	990	25/15
SFJ05860	¾	115/230	1	1.5	14.8/7.4	1200	30/15
SFJ06860	1	115/230	1	1.4	16.2/8.1	1400	30/20
J05853N	¾	230/115	1	1.5	13.8/6.9	1294	40 / 20
J06853N	1	230/115	1	1.6	16.8/8.4	1691	45 / 20
J07858N	2	230/115	1	1.7	20.4/10.2	2350	50 / 25
J08854N	2	230	1	1.4	12	2604	30
J09853N	3	230	1	1.2	14.5	3278	45

① Effective July, 1998, 230 V only. **Note:** Refer to motor nameplate for motor part number

ELECTRICAL COMPONENTS

GWT Motor Model	Motor Overload with Leads			Run Capacitor and MFD	Start Capacitor MFD Rating	Switch ⑤
	④ Old Number	③ New Number	T.I. Number			
J04853	614246 71		MET38ABN		610807 1: 124/148	629002 2
J05853	614246 20		CET63ABN		610807 2: 161/192	629002 2
J06853	614246 9		CET52ABN		610807 2: 161/192	629002 2
J07858	614246 79		CET38ABM		610807 2: 161/192	629002 2
J08854	611307 29		BRT44ABM	614529 4: 25	610807 1: 124/148	629002 2
J09853	611106 22	611106 36	BRB2938	628318 314: 55	610807 11; 36-43	629002 2
J04853L	614246 98	627121 43	MET39ABN-CL		610807 1:124/148	629002 2
J05853L	614246 20	627121 38	CET63ABN		610807 2:161/192	629002 2
J06853L	614246 9	627121 7	CET52ABN		610807 2:161/192	629002 2
J07858L		611123 21	BRT45ABM		610807 7:189/227	629002 2
J08854L	616861 10	627119 10	CET31ABN	623450 8: 30	610807 33: 64-77	629002 2
SFJ04853	621863 1		MEJ38ABN		N/A	3945C91A01
SFJ05853	621863 4		CET55ABN		610807 2: 161/192	3945C91A01
SFJ06853	621863 5		CET49ABN		610807 2: 161/192	3945C91A01
SFJ04860	614246 67	627121 48	MET36ABN		610807 2: 161/192	629002 2
SFJ05860	614246 20	627121 38	CET63ABN		610807 2: 161/192	629002 2
SFJ06860	614246 9	627121 7	CET52ABN		610807 2: 161/192	629002 2
J05853N		P751056520063	CEJ65CV	N/A	C103237300109: 238/110	X837648580001
J06853N		P751056520251	CEJ-49CV	N/A	C103237300109: 238/110	X837648580001
J07858N		P751056520253	CEJ49CY	C107558550064: 50/370	C103237300120: 208/165	X837406460002
J08854N		P751056520249	CEJ-38CS	C107558550064: 50/370	C103237300127: 59/250	X837406460002
J09853N		P751056520192	CEJ31CY	C107558550064: 50/370	C103237300127: 59/250	X837406460002

③ These new overload part numbers are for use with the new plastic terminal board with the quick change voltage plug.

④ Use this suffix if your motor has the old style brown terminal board without quick change voltage plug.

⑤ 629002 2 replaces 614234 1, 2, and 6.

JET PUMP MOTOR WIRING A.O. SMITH MOTORS

TERMINAL BOARD AND VOLTAGE CHANGE PLUG

A change has been made to use a new terminal board on the A.O. Smith two compartment motor models. This terminal board is used on both dual voltage and single voltage motors.

FEATURES

- Voltage Plug: Dual voltage motors use a voltage plug that retains the terminals for the black and black tracer leads. To change voltage, lift the black plug and align the arrow with the desired voltage on terminal board. See Figure 1 for an example of the dual voltage connection diagram.
- Screws with ¼" drive: The terminal screw accepts either a ¼" nut driver or a slotted screw driver.
- Line Wire Connection: The space under the screw will accept #16, #14, #12, #10, or #8 wire. The rib at the bottom edge of the screw allows the wire to be placed straight into the space under the screw. This rib retains the wire under the head of the screw and for #12, #10, or #8 wire it is not necessary to wrap the wire around the screw.
- ½ hp wired 115 V, ¾ hp and up wired 230 V at factory.
- Quick Connect Terminals: Each terminal has provision for ¼" quick connect terminals in addition to the screw.
- Molded Plastic Material: The terminal board is made from an extremely tough white plastic material with L1, L2, and A markings molded into the board.
- Lead Channel: A channel adjacent to the conduit hole directs wiring to the top of the board.
- Governor Guard: An integral backplate prevents leads from entering the area around the governor.
- Ground Guard: To prevent the bare ground wire from touching the "live" L2 terminal, the ground wire must be placed above this guard.

VOLTAGE CHANGES ARE MADE INSIDE THE MOTOR COVER NOT IN THE PRESSURE SWITCH.

WARNING:
DISCONNECT POWER SOURCE BEFORE CHECKING. DO NOT MAKE ANY CHANGES WITH POWER ON.

CAPACITOR START INDUCTION RUN – SINGLE SPEED (NEW STYLE – AFTER APRIL, 1999)

FIGURE 1

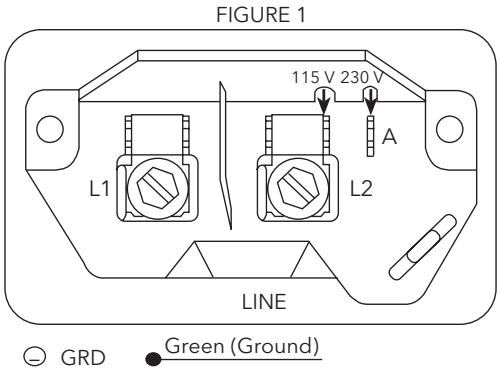

Align black plug to 115 V or 230 V arrow.

½ hp wired 115 V, ¾ hp and up wired 230 V at factory.

CAPACITOR START INDUCTION RUN – SINGLE SPEED (OLD STYLE – UP TO APRIL, 1999)

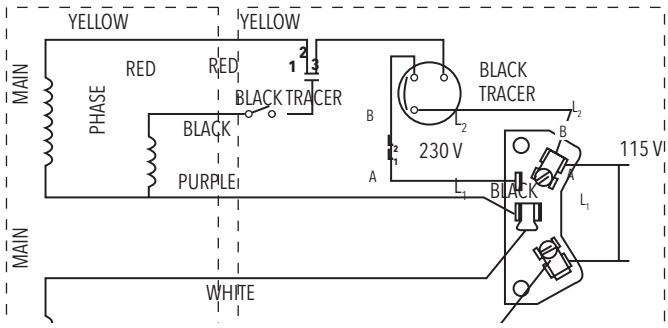

"Black Tracer" is a black and white wire

TO WIRE FOR 230 V:
BLACK TRACER TO B
BLACK TO A

TO WIRE FOR 115 V:
BLACK TRACER TO A
BLACK TO L_1

FRICTION LOSS

SCH 40 – PLASTIC PIPE: FRICTION LOSS (IN FEET OF HEAD) PER 100 FT.

GPM	GPH	⅜"	½"	¾"	1"	1¼"	1½"	2"	2½"	3"	4"	6"	8"	10"
		ft.	ft.	ft.	ft.	ft.	ft.	ft.	ft.	ft.	ft.	ft.	ft.	ft.
1	60	4.25	1.38	.356	.11									
2	120	15.13	4.83	1.21	.38	.10								
3	180	31.97	9.96	2.51	.77	.21	.10							
4	240	54.97	17.07	4.21	1.30	.35	.16							
5	300	84.41	25.76	6.33	1.92	.51	.24							
6	360		36.34	8.83	2.69	.71	.33	.10						
8	480		63.71	15.18	4.58	1.19	.55	.17						
10	600		97.52	25.98	6.88	1.78	.83	.25	.11					
15	900			49.68	14.63	3.75	1.74	.52	.22					
20	1,200			86.94	25.07	6.39	2.94	.86	.36	.13				
25	1,500				38.41	9.71	4.44	1.29	.54	.19				
30	1,800					13.62	6.26	1.81	.75	.26				
35	2,100					18.17	8.37	2.42	1.00	.35	.09			
40	2,400					23.55	10.70	3.11	1.28	.44	.12			
45	2,700					29.44	13.46	3.84	1.54	.55	.15			
50	3,000						16.45	4.67	1.93	.66	.17			
60	3,600						23.48	6.60	2.71	.93	.25			
70	4,200							8.83	3.66	1.24	.33			
80	4,800							11.43	4.67	1.58	.41			
90	5,400							14.26	5.82	1.98	.52			
100	6,000								7.11	2.42	.63	.08		
125	7,500								10.83	3.80	.95	.13		
150	9,000									5.15	1.33	.18		
175	10,500									6.90	1.78	.23		
200	12,000									8.90	2.27	.30		
250	15,000										3.36	.45	.12	
300	18,000										4.85	.63	.17	
350	21,000										6.53	.84	.22	
400	24,000											1.08	.28	
500	30,000											1.66	.42	.14
550	33,000											1.98	.50	.16
600	36,000											2.35	.59	.19
700	42,000												.79	.26
800	48,000												1.02	.33
900	54,000												1.27	.41
950	57,000													.46
1000	60,000													.50

NOTE: See page 5 for website addresses for pipe manufacturers – there are many types of new plastic pipe available now.

STORAGE OF WATER IN VARIOUS SIZES OF WELLS

$$\frac{D^2}{24.5} = \text{gallons of storage per foot}$$

Where: D = Inside diameter of well casing in inches

Examples:

2" casing = .16 gallons per foot storage	8" casing = 2.6 gallons per foot storage
3" casing = .36 gallons per foot storage	10" casing = 4.07 gallons per foot storage
4" casing = .652 gallons per foot storage	12" casing = 5.87 gallons per foot storage
5" casing = 1.02 gallons per foot storage	14" casing = 7.99 gallons per foot storage
6" casing = 1.4 gallons per foot storage	16" casing = 10.44 gallons per foot storage

UL AND CSA AGENCY LISTING(S)

Our control boxes, motors, complete pump assemblies and electrical accessories are tested by independent product safety and testing organizations to ensure compliance with the US National Electric Code (NEC) and/or Canadian Standards Association (CSA) standards. Underwriters Laboratories Inc. and CSA are the agencies with whom we contract. They have now agreed to eliminate overlapping efforts through an agreement which allows either to test to the other's standards. This is good for manufacturers and consumers as overlapping independent testing is very expensive.

Unfortunately, there is a great deal of misunderstanding associated with the Agency Listings and their marks or logos. By meeting specific safety requirements products can be either UL Listed or UL Recognized. The UL mark in a circle signifies that a product is UL Listed (approved) for its intended use by Underwriters Laboratories Inc. Radios, televisions, CD players, fans and small appliances are a good example of UL Listed products.

The lesser known and most misinterpreted UL mark is the backwards , signifying a UL Recognized Component. This is used on products that are combined to create a complete assembly. In the submersible pump Industry, pumps larger than 2 hp are shipped as separate water ends and motors due to weight and length restrictions of major shippers. Therefore the products cannot carry a logo, but only the backwards logo since they are components of a complete system. According to both UL and CSA, electrical inspectors should consider the assembled products as approved if the motor and water end are matched by hp, i.e. a ½ hp Water End on a ½ hp Motor.

The 4" Goulds Water Technology motors are tested by Canadian Standards Association to UL 1004 and 2111 as well as to CSA standards 77 and 100. They carry a logo. This indicates they are CSA Listed for the USA and Canada, i.e., tested by C.S.A. to U.L. and CSA standards.

CentriPro, single-phase, 4" motor control boxes carry a listing.

Testing by the Canadian Standards Association is denoted by the CSA logo or .

Per their recent agreement UL can test products sold in the USA and/or Canada, conversely, CSA can test products sold in Canada and/or the USA.

Logos and their meanings follow:

- UL Listed for USA
- UL Listed for Canada (tested by UL to CSA Standards)
- UL Listed for USA and Canada (tested by UL to UL & CSA Standards)
- UL Recognized Component for USA
- UL Recognized Component for Canada (tested by UL to CSA Standards)
- UL Recognized Component for USA and Canada (tested by UL to UL & CSA Standards)
- CSA approved for Canada
- CSA approved for USA (tested by CSA to UL Standards)
- CSA approved for USA and Canada (tested by CSA to CSA & UL Standards)
- Certified to NSF/ANSI 61, Drinking Water System Components 4P49
- Drinking Water System Components - Certified to NSF/ANSI 61, Annex G
- **NSF/ANSI 372** – Drinking Water System Components – Lead Content
  CLASS 6853 01 - Low Lead Content Certification Program - - Plumbing Products
  California Health and Safety Code 116875 (known as AB-1953-2006)
  Vermont Act No. 193 - 2008 - Consumer Products Prohibition against Lead (known as Bill S.152 "An Act Rlating to Prevention of Lead Poisoning by Exposure to Lead in Consumer Products")
  Maryland House Bill 372 [Statue 12-605] - Business Occupations and Professionals - Plumbers - Lead Free Materials

Per the reciprocity agreement between the two agencies, electrical inspectors in both countries should now be honoring either the UL or CSA mark on products approved for their country.

Xylem |ˈzīləm|

1) The tissue in plants that brings water upward from the roots;
2) a leading global water technology company.

We're a global team unified in a common purpose: creating advanced technology solutions to the world's water challenges. Developing new technologies that will improve the way water is used, conserved, and re-used in the future is central to our work. Our products and services move, treat, analyze, monitor and return water to the environment, in public utility, industrial, residential and commercial building services settings. Xylem also provides a leading portfolio of smart metering, network technologies and advanced analytics solutions for water, electric and gas utilities. In more than 150 countries, we have strong, long-standing relationships with customers who know us for our powerful combination of leading product brands and applications expertise with a strong focus on developing comprehensive, sustainable solutions.

For more information on how Xylem can help you, go to www.xylem.com

xylem
Let's Solve Water

Xylem Inc.
www.xylem.com/goulds

Xylem, Aquavar and CentriPro are trademarks or registered trademarks of Xylem Inc. or one of its subsidiaries. Goulds is a registered trademark of ITT Manufacturing Enterprises LLC and is used under license. All other trademarks or registered trademarks are property of their respective owners.

© 2022 Xylem Inc. BMAID R16 December 2022