SIMPSON Strong-Tie®

Strong-Rod™ Systems

SEISMIC AND WIND RESTRAINT SYSTEMS GUIDE


Smart design from product to project
NEAR EDGE 1- LAYER, SECTION B-B
NEAR EDGE 1- LAYER, SECTION A-A
NEAR EDGE ANCHOR BOLT PLAN
NEAR EDGE ANCHOR BOLT ONLY SECTION B-B
NEAR EDGE ANCHOR BOLT ONLY SECTION A-A

Product Design

We put our product designs through rigorous testing at our cutting-edge research and development facilities in order to deliver best-in-class structural solutions to the market. Our high-performance Strong-Rod™ systems are code listed for securing mid-rise, wood-framed buildings against forces caused by seismic and wind events. With innovative components that work together to create a continuous load path, Simpson Strong-Tie rod systems are built for maximum resilience and installation efficiency.

Engineering Design Services

No company knows light-frame wood construction better than Simpson Strong-Tie. Our design support services provide the technical expertise needed to tackle the complex challenges posed by mid-rise buildings. Using your project's unique design considerations and specifications, we can quickly create whole system designs, providing you a submittal-ready package of code-compliant components and plans to keep your project on time and within budget.

(800) 999-5099 | strongtie.com

Company Profile

For over 60 years, Simpson Strong-Tie has focused on creating structural products that help people build safer and stronger homes and buildings. A leader in structural systems research and technology, Simpson Strong-Tie is one of the largest suppliers of structural building products in the world. The Simpson Strong-Tie commitment to product development, engineering, testing and training is evident in the consistent quality and delivery of its products and services.

For more information, visit the company's website at **strongtie.com**.

The Simpson Strong-Tie Company Inc. No Equal pledge includes:

- Quality products value-engineered for the lowest installed cost at the highest-rated performance levels
- The most thoroughly tested and evaluated products in the industry
- Strategically located manufacturing and warehouse facilities
- National code agency listings
- The largest number of patented connectors in the industry
- Global locations with an international sales team
- In-house R&D and tool and die professionals
- In-house product testing and quality control engineers
- Support of industry groups including AISC, AISI, AITC, ASTM, ASCE, AWC, AWPA, ACI, CSI, CFSEI, ICFA, NBMDA, NLBMDA, SDI, SETMA, SFA, SFIA, STAFDA, SREA, NFBA, TPI, WDSC, WIJMA, WTCA and local engineering groups.

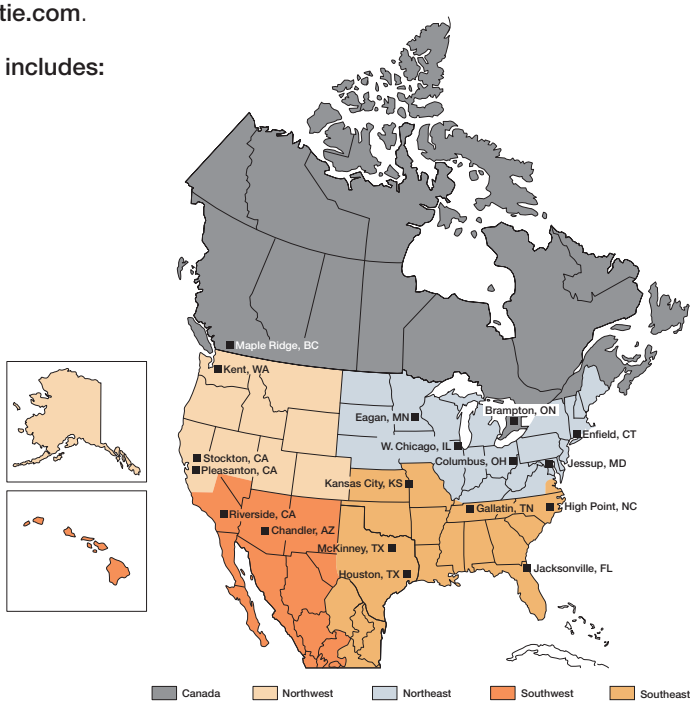

The Simpson Strong-Tie Quality Policy

We help people build safer structures economically. We do this by designing, engineering and manufacturing "No Equal" structural connectors and other related products that meet or exceed our customers' needs and expectations. Everyone is responsible for product quality and is committed to ensuring the effectiveness of the Quality Management System.

Karen Colonias
Chief Executive Officer

Getting Fast Technical Support

When you call for engineering technical support, we can help you quickly if you have the following information at hand.

- Which Simpson Strong-Tie literature piece are you using? (See the back cover for the form number.)
- Which Simpson Strong-Tie product or system are you inquiring about?
- What is your load requirement?

We Are ISO 9001-2008 Registered

Simpson Strong-Tie is an ISO 9001-2008 registered company. ISO 9001-2008 is an internationally-recognized quality assurance system that lets our domestic and international customers know they can count on the consistent quality of Simpson Strong-Tie® products and services.

Table of Contents

Strong-Rod™ Systems Assemblies

1. Simpson Strong-Tie reserves the right to change specifications, designs, and models without notice or liability for such changes.
2. Steel used for each Simpson Strong-Tie® product is individually selected based on the product's steel specifications, including strength, thickness, formability, finish and ability to weld. Contact Simpson Strong-Tie for steel information on specific products.
3. Unless otherwise noted, dimensions are in inches, loads are in pounds.
4. Do not overload. Do not exceed published allowable loads that would jeopardize the connections.
5. Wood shrinks and expands as it loses and gains moisture content, particularly perpendicular to its grain. Take wood shrinkage into account when designing and installing connections. The effects of wood shrinkage are increased in multiple lumber connections, such as floor-to-floor installations. This may result in the nuts for the vertical rod system becoming loose, requiring tightening (unless shrinkage compensating devices are installed). Section 2304.3.3 of the 2015 IBC requires wood structures supporting more than two floors and a roof be analyzed for the effects of wood shrinkage. Refer to the wood shrinkage web application on **strongtie.com/software** for more information. See ICC-ES ESR-2320 for additional information on Simpson Strong-Tie take-up devices.
6. The term "Designer" used throughout this guide is intended to mean a qualified licensed professional engineer or a qualified licensed architect.
7. All connected members and related elements shall be designed by the Designer.
8. Where multiple members of lumber are intended to act as one unit, they must be fastened together to resist the applied load. This design must be determined by the Designer.
9. Local and/or regional building codes may require meeting special conditions, such as rod elongation limits. Also, building codes often require special inspection of anchors installed in concrete and masonry. For compliance with these requirements, it is necessary to contact the local and/or regional building authority. Except where mandated by code, Simpson Strong-Tie products do not require special inspection.
10. All installations should be designed in accordance with the published allowable load values.
11. The Designer is responsible for verifying that all design loads do not exceed the allowable loads listed for each component in the restraint system.
12. Corrosion information may be found at **strongtie.com/corrosion**.
13. Components should be kept dry and away from corrosive materials and away from steel that has already shown signs of corrosion.
14. Once installed, take precautions to prevent the RTUD from getting wet and freezing. Permanent damage may result if the installed device freezes when it has water inside it.

General Notes for Shearwall Overturning Restraint

1. When designing for shearwall overturning restraint, the Designer is responsible for verifying that the building drift is within the acceptable code limitations. Serviceability should also be considered.
2. Studs, posts and blocking details shall be specified by the Designer and are not provided by Simpson Strong-Tie. Refer to **strongtie.com/srs** for compression member allowable capacities, design assumptions and general notes.
3. Anchorage solutions shall be specified by the Designer. Foundation size and reinforcement shall be specified by the Designer. Contact Simpson Strong-Tie to coordinate connecting components at the first level.
4. The Simpson Strong-Tie Strong-Rod Anchor Tiedown System for shearwall overturning restraint (Strong-Rod ATS) is designed to be installed floor-by-floor as the structure is built. Installation in this manner, with shearwalls, will provide lateral stability during construction.
5. Do not specify welding of products listed in this design guide unless this publication specifically identifies a product as acceptable for welding, or unless specific approval for welding is provided in writing by Simpson Strong-Tie. Cracked steel due to unapproved welding must be replaced.
6. Simpson Strong-Tie strongly recommends the following addition to construction drawings and specifications: “Simpson Strong-Tie connectors and tiedown components are specifically designed to meet the structural loads specified on the plans or provided by the Designer. Before substituting an alternate rod system, confirm load capacity and system displacement (rod elongation and shrinkage compensation device displacement) are based on reliable published testing data and/or calculations. The Designer should evaluate and give written approval for substitution prior to installation.”
7. The allowable loads published in this guide are for use when utilizing the Allowable Stress Design methodology. A method for using Load and Resistance Factor Design (LRFD) for wood has been published in ANSI/AWC NDS-2012. If LRFD capacities are required, contact Simpson Strong-Tie.
8. Local and/or regional building codes may have additional requirements. Building codes often require special inspection of anchors installed in concrete and masonry. For compliance with these requirements, it is necessary to contact the local and/or regional building authority.
9. Steel bearing plates shall be sized for proper length, width and thickness based on steel bending capacity and wood bearing. Deflection of bearing compression (up to 0.04") must be included in overall shearwall deflection calculations.
10. Available Strong-Rods, fully threaded rod sizes and material grades are listed at **strongtie.com/srs**.

General Notes for Uplift Restraint System for Roofs

1. Simpson Strong-Tie® Strong-Rod™ Uplift Restraint System for roofs (Strong-Rod URS) provides tiedown solutions comprising steel components, which include threaded rods, bearing plates, nuts, coupler nuts and take-up devices. Top plate(s), blocking, and other wood members that transfer uplift load to the tiedown runs are not provided by Simpson Strong-Tie.
2. Simpson Strong-Tie provides uplift restraint systems for roofs to meet the design uplift forces. These forces are provided and determined by the Designer and governing jurisdiction requirements. During preliminary design, Simpson Strong-Tie may determine estimated loading; however, the Designer is responsible for final design, calculations or derivation of structural forces related to the building. Simpson Strong-Tie has not confirmed and is not responsible for verifying the uplift restraint system adherence to the governing jurisdiction's deflection requirements or its performance in consideration of structural deformation compatibility.
3. The rod system that provides uplift restraint for roofs should be continuous from the roof-level top plate(s) to the foundation or to the underside of the level where the Designer has determined the tiedown run can terminate due to dead load resistance.
4. Spacing tables for uplift restraint runs shall be found at **strongtie.com/srs**. The Designer may establish specific detailing and provide calculations approved by the local jurisdiction to allow for increased spacing.
5. Wood framing members used in top plate and wall stud applications must be either sawn dimensional lumber complying with IBC Section 2303.1.1 or IRC Section R602.1, or structural composite lumber (SCL) recognized in a current ICC-ES or IAPMO UES evaluation report, with nominal dimensions of either 2x4 or 2x6 sizes with a Specific Gravity (SG) in a range of 0.42 to 0.55. Sawn dimension lumber must have a moisture content of 19 percent or less (16 percent for SCL members), both at the time of installation and in service.
6. Where connection hardware between the roof framing members and the wall top plate induces eccentric loading about the centerline of the top plate, Simpson Strong-Tie top plate-to-stud connections must be installed to prevent top plate rotation. The top plate-to-stud connector used to resist this rotational force must be on the same side of the wall as the roof-to-wall connectors. See p. 55 for more information.
7. The top-plate splice details shown on p. 54 apply to the "reinforced" top-plate tables available at **strongtie.com/srs**.
   The splice reinforcement must be attached using ¼"x 4½" Simpson Strong-Tie Strong-Drive® SDS Heavy-Duty Connector screws. Otherwise the "unreinforced" top-plate tables must be used.
8. Fully threaded steel rods used with the roof uplift restraint tiedown runs have diameters of ⅜" through ¾". The threaded rods are made of ASTM F1554 Grade 36 or A307 Grade A, steel.
9. Threaded rod couplers used to attach threaded rods end to end require proof of positive connection between threaded rods and rod couplers, such as the use of Witness Holes™.
10. Tabulated values given for the roof uplift restraint runs in ICC-ES ESR-1161 are available at **strongtie.com/srs** and take into account the following serviceability limits:
    a. 0.18" inch of total rod elongation along the length of the roof uplift restraint run.
    b. A bending deflection limit of L/240 for the top plate(s), where L is the span of the top plate between adjacent tiedown runs.
    c. 0.25" of roof uplift restraint total system deflection between the top plate(s) and the termination of the run that includes the total elongation of the rod run and the bending of the top plate(s) between rod runs. The contribution of wood shrinkage to the overall deflection of the continuous rod tiedown system must be analyzed by the Designer. Simpson Strong-Tie recommends the use of a shrinkage compensation device (take-up device) at each run to mitigate wood shrinkage. The tables included in this design guide include the effect of RTUD or ATUD shrinkage compensation devices.
    d. Wood bearing compression under steel bearing plates (up to 0.04").

Limited Warranty

Simpson Strong-Tie Company Inc. warrants catalog products to be free from defects in material or manufacturing. Simpson Strong-Tie Company Inc. products are further warranted for adequacy of design when used in accordance with design limits in this catalog and when properly specified, installed and maintained. This warranty does not apply to uses not in compliance with specific applications and installations set forth in this catalog, or to non-catalog or modified products, or to deterioration due to environmental conditions.

Simpson Strong-Tie® connectors are designed to enable structures to resist the movement, stress and loading that results from events such as earthquakes and high-velocity winds. Other Simpson Strong-Tie products are designed to the load capacities and uses listed in this catalog. Properly-installed Simpson Strong-Tie products will perform in accordance with the specifications set forth in the applicable Simpson Strong-Tie catalog. Additional performance limitations for specific products may be listed on the applicable catalog pages.

Due to the particular characteristics of potential seismic and high wind events, the specific design and location of the structure, the building materials used, the quality of construction, and the condition of the soils involved, damage may nonetheless result to a structure and its contents even if the loads resulting from the seismic or high wind event do not exceed Simpson Strong-Tie catalog specifications and Simpson Strong-Tie connectors are properly installed in accordance with applicable building codes.

All warranty obligations of Simpson Strong-Tie Company Inc. shall be limited, at the discretion of Simpson Strong-Tie Company Inc., to repair or replacement of the defective part. These remedies shall constitute Simpson Strong-Tie Company Inc.'s sole obligation and sole remedy of purchaser under this warranty. In no event will Simpson Strong-Tie Company Inc. be responsible for incidental, consequential, or special loss or damage, however caused.

This warranty is expressly in lieu of all other warranties, expressed or implied, including warranties of merchantability or fitness for a particular purpose, all such other warranties being hereby expressly excluded. This warranty may change periodically — consult our website **strongtie.com** for current information.

Terms and Conditions of Sale

Product Use

Products in this guide are designed and manufactured for the specific purposes shown, and should not be used with other connectors not approved by a qualified Designer. Modifications to products or changes in installations should only be made by a qualified Designer. The performance of such modified products or altered installations is the sole responsibility of the Designer.

Indemnity

Customers or Designers modifying products or installations, or designing non-catalog products for fabrication by Simpson Strong-Tie Company Inc. shall, regardless of specific instructions to the user, indemnify, defend and hold harmless Simpson Strong-Tie Company Inc. for any and all claimed loss or damage occasioned in whole or in part by non-catalog or modified products.

Non-Catalog And Modified Products

Consult Simpson Strong-Tie Company Inc. for applications for which there is no catalog product, or for connectors for use in hostile environments, with excessive wood shrinkage, or with abnormal loading or erection requirements.

Non-catalog products must be designed by the customer and will be fabricated by Simpson Strong-Tie in accordance with customer specifications.

Simpson Strong-Tie cannot and does not make any representations regarding the suitability of use or load-carrying capacities of non-catalog products. Simpson Strong-Tie provides no warranty, express or implied, on non-catalog products. F.O.B. Shipping Point unless otherwise specified.

Why Continuous Rod Tiedown Systems?

Seismic and wind events are serious threats to structural integrity and occupant safety. All wood-framed buildings need to be designed to resist shearwall overturning and roof-uplift forces. For one- and two-story structures, connectors (straps, hurricane ties and holdowns) have been the traditional answer. With the growth in mid-rise, wood-framed structures, however, rod systems have become an increasingly popular lateral and uplift restraint solution.

Multi-story structures present complicated design challenges. Frequently, the structures have larger windows and door openings, providing less space for traditional restraint systems. For all these reasons, there is increased need for restraint systems that can meet multi-story structural demands without sacrificing installation efficiency or cost considerations.

Continuous rod tiedown systems are able to answer these demands by restraining both lateral and uplift loads, while maintaining reasonable costs on material and labor. Instead of using metal connector brackets as in a holdown system, continuous rod tiedown systems consist of a combination of rods, coupler nuts, bearing plates and shrinkage-compensation devices. These all work together to create a continuous load path to the foundation.

To contact a Simpson Strong-Tie representative for help designing your Strong-Rod™ continuous rod tiedown solution, call (800) 999-5099 or visit **strongtie.com/srscontact**.

Tension Forces Resisted by Continuous Rod Tiedown Systems

Continuous rod tiedown systems are used to resist two types of tension forces — shearwall-overturning forces and uplift forces on roofs.

Shearwall Overturning Restraint System

One type of tension force is a result of lateral (horizontal) forces due to a wind or seismic event. This force occurs at the end of shearwalls and its magnitude increases at lower levels as it accumulates the tension force from each level or shearwall above.

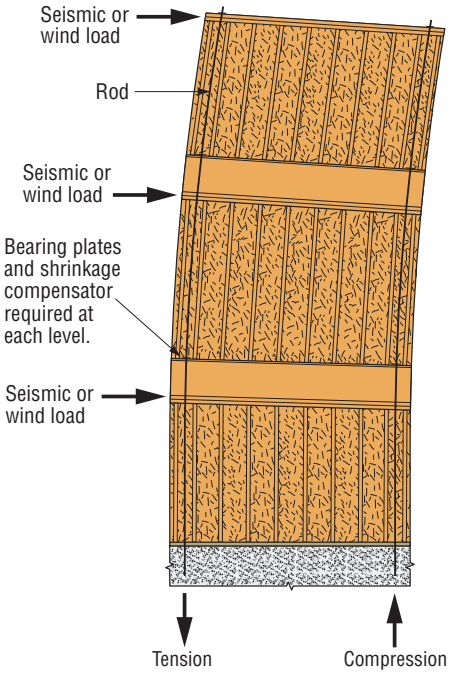

Uplift Restraint System for Roofs

Roof uplift tension forces are those net vertical wind forces that occur as uplift loads at the bearing points of roof trusses or rafters of a structure. In moderate- to high-wind areas, these forces are generally resisted by rafter-to-top-plate connections in combination with tiedown systems spaced uniformly along exterior and interior bearing walls.

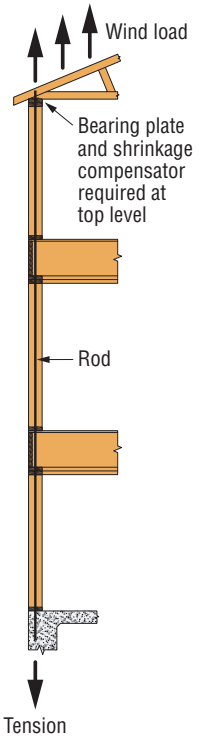

Simpson Strong-Tie® Strong-Rod™ Systems

To ensure structural stability, a continuous rod tiedown system can be used in a mid-rise wood-framed structure to resist shearwall overturning and roof uplift.

Simpson Strong-Tie Strong-Rod Systems provide both an Anchor Tiedown System for shearwall overturning restraint (Strong-Rod ATS) and an Uplift Restraint System for roofs (Strong-Rod URS).

Strong-Rod ATS solutions address the many factors that must be considered during design to ensure proper performance against shearwall overturning — such as rod elongation, wood shrinkage, construction settling, shrinkage compensating device deflection, incremental loads, bearing plate bending, cumulative tension loads and anchorage.

Strong-Rod URS solutions address the many factors that must be considered during design to ensure proper performance to resist roof uplift — such as rod elongation, wood shrinkage, rod-run spacing, wood top-plate design (connection to roof framing, reinforcement at splices, bending and rotation restraint), and anchorage.

Simpson Strong-Tie Strong-Rod Systems have been extensively tested by our engineering staff at our state-of-the-art, accredited labs. Our testing and expertise have been crucial in providing customers with code-listed solutions. The Strong-Rod URS solution is code-listed in evaluation report ICC-ES ESR-1161 in accordance with AC391, while the take-up devices used in both the ATS and URS solutions are code-listed in evaluation report ICC-ES ESR-2320 in accordance with AC316.

Leverage Our Expertise to Help with Your Rod System Designs

A large number of factors need to be considered when specifying a rod system:

- Wood shrinkage
- Fire-treated wood
- Initial and equilibrium moisture content of wood members
- Rod elongation
- Take-up device deflection
- Local code limitations

Simpson Strong-Tie is here to help you. We provide complimentary design services to help engineers with their continuous rod design. Since no two buildings are alike, each project is optimally designed to the Designer's individual specifications. Run-assembly elevation drawings and load tables are provided to the Designer for approval. For our design support services, contact your Simpson Strong-Tie representative at (800) 999-5099 or visit **strongtie.com/srscontact**.

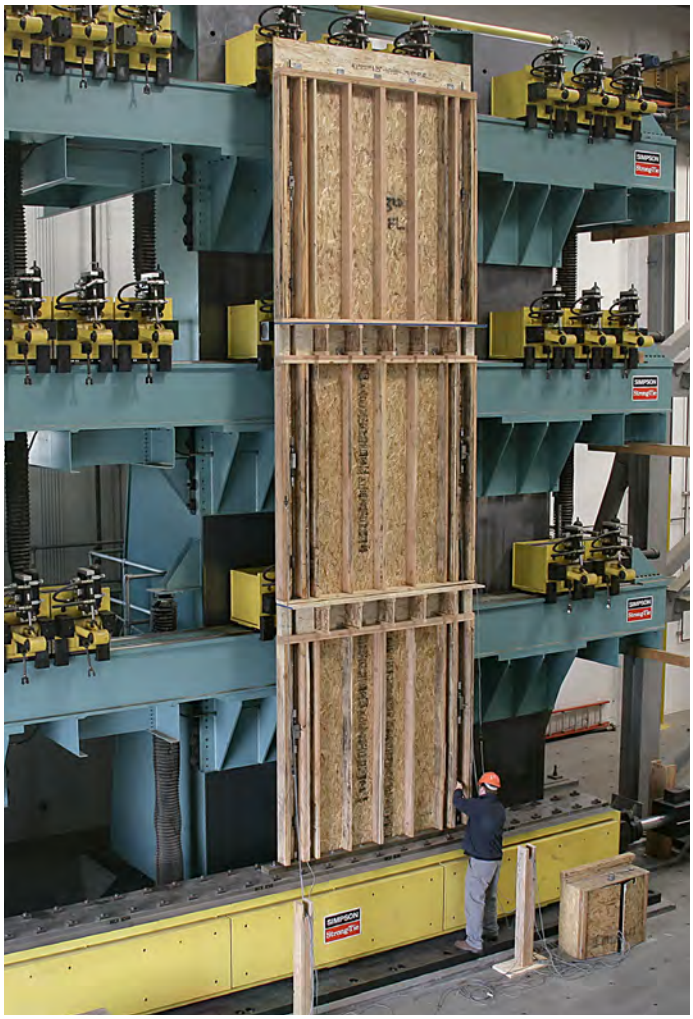

Strong-Rod™ ATS Anchor Tiedown System for Shearwall Overturning Restraint

To complement its research and design expertise, Simpson Strong-Tie has all the components needed to optimally design and build a continuous rod tiedown system for withstanding shearwall overturning forces. From our threaded rod to our plates and nuts, to our latest shrinkage compensators and design services, we offer Designers a complete solution.

Pull pin before installing drywall.

Anchor Tiedown System for Shearwall Overturning Restraint

A continuous load path is essential to a building's structural performance. Directing the diaphragm loads from roofs, floors and walls to the foundation in a prescribed continuous path is a widely accepted method to prevent shearwall overturning. The installation of continuous rod systems has grown in popularity with the increase in mid-rise wood (3- to 6-story) construction. Specifying a Strong-Rod™ Anchor Tiedown System (ATS) for shearwall overturning restraint from Simpson Strong-Tie offers several advantages for Specifiers and installers alike:

- An ATS restraint provides the high load capacities required for mid-rise wood construction
- System components provide low deflection to help limit shearwall drift
- Steel tension elements of the structural lateral force resisting system can be designed for the Specifier by Simpson Strong-Tie® Engineering Services
- Wood compression components of the shearwall system can be designed for the Specifier by Simpson Strong-Tie Engineering Services
- Simpson Strong-Tie Engineering Services can perform checks to ensure that your plans have the optimally designed system
- Our knowledge of rod system performance through years of testing ensures that all system design considerations have been met

Beyond the tension and compression aspects of a continuous rod tiedown system, wood shrinkage must also be addressed. In these types of structures, shrinkage and settlement can cause a gap to develop between the steel nut and bearing plate on the wood sole or top plate (see photo below), as the shrinkage increases cumulatively up the building and is the greatest at the uppermost floor. This can cause the system not to perform as designed and can add to system deflection. As a result, take-up devices must be used with most wood structures greater than two stories tall as is noted in the IBC 2015 Section 2304.3.3 at each level to mitigate any gap creation and therefore ensure optimum system performance.

What is the Load Path?

Traditional Shearwall Load Path

A traditional shearwall relies either on holdowns or straps attached to posts to transfer the net shearwall overturning forces to the foundation.

Lateral forces are transferred from the floor/roof to the plywood sheathing. The following steps describe the traditional load path:

Step 1. Nails are typically used to transfer loads from the sheathing to the wall framing.

Step 2. The outermost framing boundary elements transfer the tensile forces, resulting from the net overturning, to the holdown that is attached to the post at the boundary.

Step 3. The holdown system then transfers the load in tension to an anchor that is embedded into a concrete foundation.

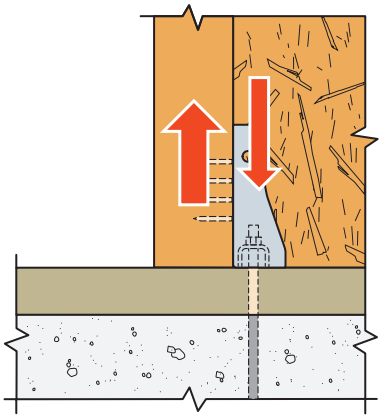

Traditional System

Continuous Rod Tiedown System Load Path

A continuous rod tiedown system utilizes a combination of threaded rods with bearing plates and take-up devices at each level to transfer the forces to the foundation. The following steps describe the continuous rod tiedown system load path:

1. The end posts deliver the sheathing load to the top plates and bearing plate.
2. Bearing plate transfers the load through a nut into the rod system.
3. Rod system transfers the load from the plate through tension in the rods to the foundation.

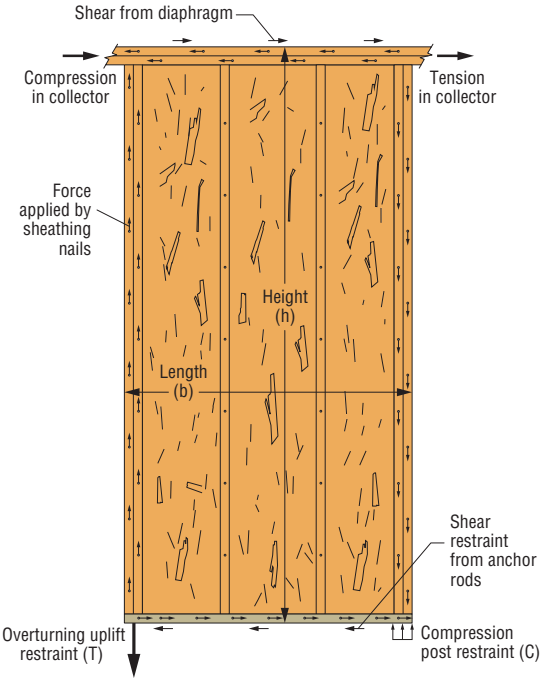

Shearwall Load Path

Strong-Rod System Components to Achieve This Load Path

- Aluminum take-up devices (ATUD) allow for multiple rod diameters.
- Ratcheting take-up devices (RTUD) fit ½", ⅝" and ¾" diameter rods.
- Optimized bearing plates accommodate the new ATUD and RTUD sizes.
- New options for compression post configurations that standardize anchor layout and reduce non-structural lumber in the upper stories.
- Shallow podium anchors provide test-proven solutions for anchoring high loads to relatively shallow podium slabs at interior and edge conditions in conformity with ACI 318, Anchor Provisions.

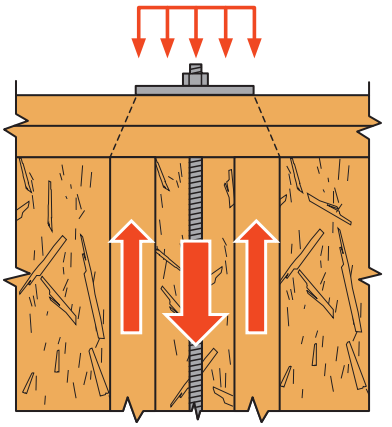

Continuous Rod Tiedown System

SIMPSON Strong-Tie®

Key Considerations for Designing an Anchor Tiedown System for Shearwall Overturning Restraint

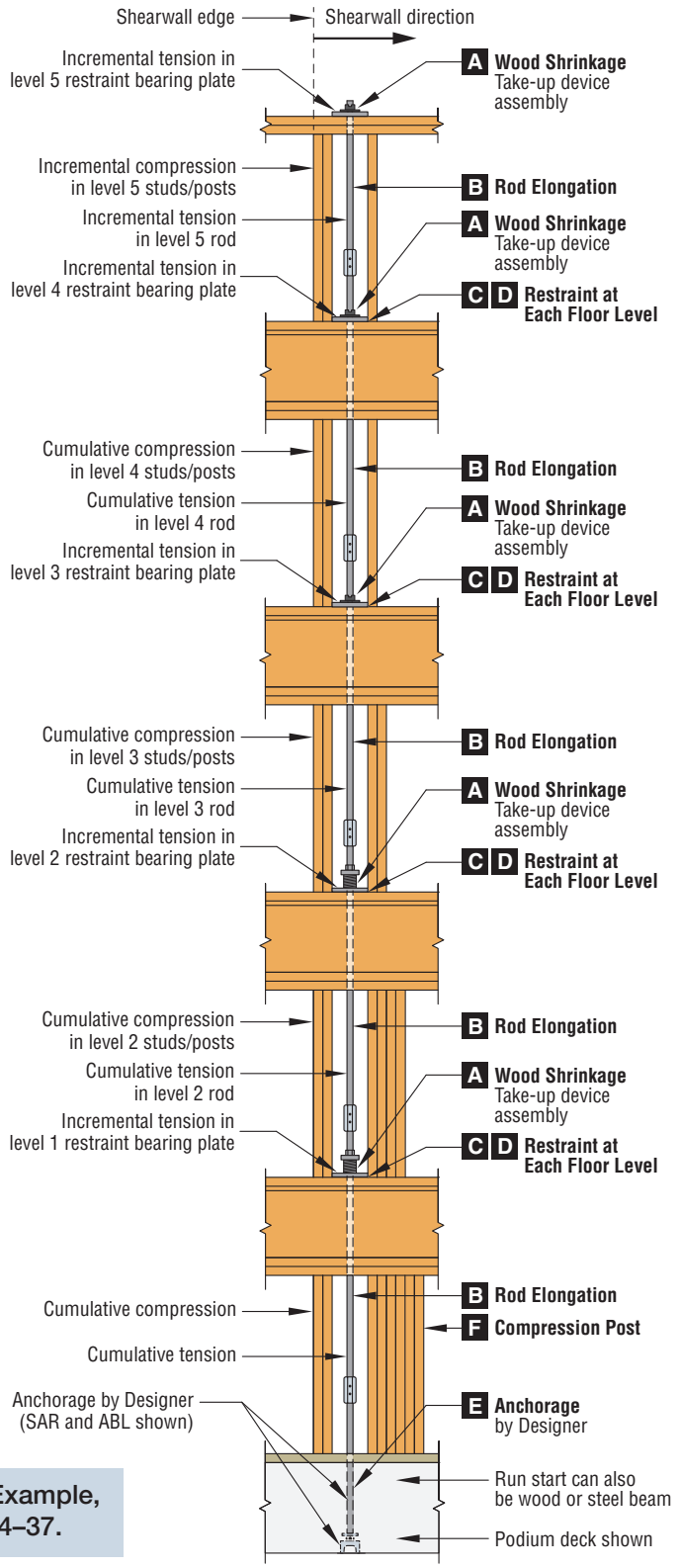

For Design Example, see pp. 34–37.

Note: Third stud may be required at shearwall edge.

A Wood Shrinkage

2015 International Building Code® (IBC) Section 2304.3.3 requires that Designers evaluate the impact of wood shrinkage on the building structure when bearing walls support more than two floors and a roof. It is important to consider the effects of wood shrinkage when designing any continuous rod tiedown system. As wood loses moisture, it shrinks, but the continuous steel rod does not, which potentially forms gaps in the system.

ICC-ES AC316 limits rod elongation and shrinkage compensating device deflection to 0.20" at each level or between restraints unless shearwall drift is determined to be within code limits. Rod diameter and take-up device choice are obviously important. Simpson Strong-Tie take-up devices (TUDs) and aluminum TUDs (ATUDs) have very little deflection ($\Delta_A + \Delta_R$) and therefore minimize the contribution of device displacement to the 0.20" deflection limit, which allows for smaller rod diameters.

See **strongtie.com/srs** for additional information regarding wood shrinkage and how Simpson Strong-Tie® take-up devices mitigate wood shrinkage within an Anchor Tiedown System for shearwall overturning restraint. To access our Wood Shrinkage Calculator, visit **strongtie.com/software**.

B Rod Elongation

A continuous rod tiedown run will deflect under load. The amount of stretch depends on the magnitude of load, length of rod, net tensile area of steel and modulus of elasticity.

In a continuous rod tiedown system designed to restrain shearwall overturning, the rod length is defined since it is tied to the story heights and floor depths. The modulus of steel is also a constant (29,000 ksi for steel) and steel strength does not affect elongation. The only variables then per run are the load and rod net tensile area, which will be controlled by:

- Quantity, location and length of shearwalls provided to support the structure.
- Choice of rod diameter, which will be used in determining the rod net tensile area, A_e.

Note: It is important to use the net tensile area, A_e, for determining rod elongation. Gross rod area, A_g, will be used for the strength calculation.

Access the Simpson Strong-Tie Rod Elongation Calculator by visiting **strongtie.com/software**.

C Restrain Each Floor

A skipped floor system restrains two or more floors with a single restraint point to provide overturning resistance. A continuous rod tiedown system with all floors tied-off provides overturning restraint at every floor.

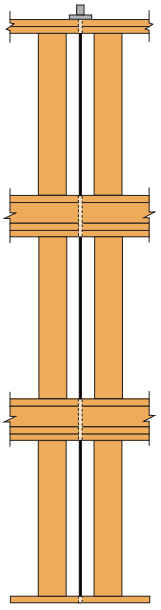

Skipped Floor System

- ✗ Increased cost for posts and rods
- ✗ Increased drift
- ✗ Lack of vertical redundancy
- ✗ Inefficient load path
- ✗ Shrinkage not accommodated at each floor
- ✗ Lack of construction stability

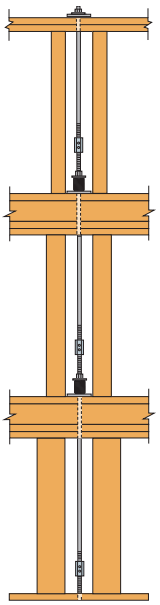

All Floors Tied-Off System

- ✓ Cost savings on posts and rods
- ✓ Reduced drift
- ✓ System redundancy
- ✓ Efficient load path
- ✓ Shrinkage accommodated at each floor
- ✓ Construction stability

See **strongtie.com/srs** for additional information about the importance of providing restraint systems at each floor level.

D Bearing Plates

Bearing plates are key components in transferring loads from the posts and top plates to the rods in an Anchor Tiedown System for shearwall overturning restraint. Bearing plates must be designed to spread the loads across the sole/sill plates to minimize the effects of wood crushing. Bearing plate bending must also be checked to ensure proper steel plate thickness. These plates transfer the incremental bearing loads via compression of the sole/sill plates and bending of the bearing plates to a tension force in the rod. For additional information, visit **strongtie.com/srs**.

E Anchorage by Designer

Many variables affect anchorage design, such as foundation type, concrete strength, anchor embedment and edge distances. Design tools, such as the Simpson Strong-Tie® Anchor Designer™ Software, are available to help the Designer navigate the complex anchorage provisions contained in the ACI 318 reference design standard. Anchor products, including the Pre-Assembled Anchor Bolt (PAB), are also available to simplify specification.

An elevated concrete slab over parking, commonly referred to as a podium slab, is a common anchorage/run start type for mid-rise, light-frame construction. These slabs pose a significant challenge to designers when anchoring the continuous rod tiedown system above.

In designing light-frame structures over concrete podium slabs, understand that lateral loads from the structure above will produce large tensile overturning forces whose demands often far exceed the breakout capacities of these relatively thin slabs. Simpson Strong-Tie has thoroughly researched and tested practical solutions that achieve the expected performance in order to provide Designers with additional design options. The use of the special detailing of anchor reinforcement shown in ACI 318, Anchorage Provisions, will greatly increase the tensile capacities of the anchors.

The concrete podium slab anchorage was a multi-year test program that commenced with grant funding from the Structural Engineers Association of Northern California and was applied toward the initial concept testing at Scientific Construction Laboratories, Inc. Following that test, a full-scale, detailed testing was completed at the Simpson Strong-Tie® Tye Gilb Laboratory. The design approach follows code calculation procedures supported by testing of adequately designed anchor reinforcement specimens. Based on the empirical test data, the inner concrete breakout cone plus the added anchor reinforcement each provided a percentage contribution to the measured peak capacity of the entire anchorage assembly. These contributions are distributed to the overall anchorage capacity and the concept is then utilized for each installation condition being considered for the calculation.

For assistance with your design, visit **strongtie.com/srs** for suggested anchorage-to-podium slab details, slab design requirements and Shallow Podium Slab Anchor Kit product information. Also visit our Structural Engineering Blog at **seblog.strongtie.com** for more information.

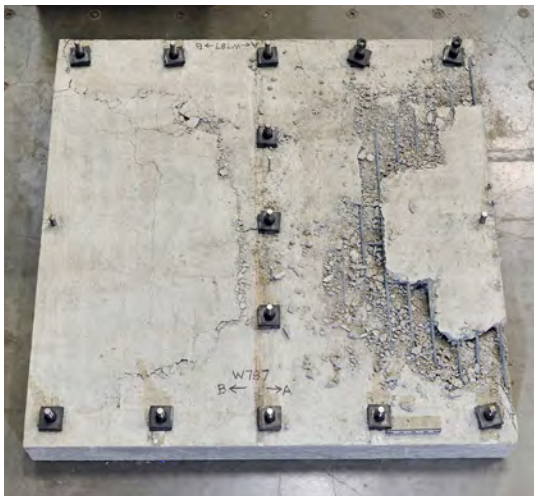

Anchor reinforcement testing at Tye Gilb Laboratory for edge and away-from-edge conditions.

Shallow Podium Anchorage Design Example

Anchorage Calculation Using Anchor Reinforcement

This example presents the anchorage solution in tension for a CIP anchor bolt in cracked concrete under seismic loading conditions in a reinforced concrete podium slab using anchor reinforcement. It is based on test results using flat bearing plates in which the full bearing surface is situated at the effective embedment depth. Other bearing surface geometries are not compatible with these test results. The calculation follows ACI 318-14 for the design of an anchor in tension, with AISC 360-16 used for the anchor allowable tensile steel strength. The witnessed testing conducted by Simpson Strong-Tie was used to validate ACI 318-14, Chapter 17 design concepts for anchor reinforcement and the need to design the structural slab to meet amplified 17.2.3.4.3 (a) anchor forces for use in SDC C–F. The design strength is based upon the ACI 318-14, Chapter 17 failure modes of tensile steel strength, concrete breakout strength, anchor pullout, concrete side-face blowout and anchor reinforcement strength. Additional failure modes observed in the testing validated greater capacities when anchor reinforcement is used, and those empirical findings are considered for that limit state. See **strongtie.com** for detailed calculations for all solutions shown on Simpson Strong-Tie website design tables.

Code Information

2015 International Building Code® (IBC)
ACI 318-14, Chapter 17 (Tension)
AISC 360-16
SDC C through F, seismic

Material Properties

Concrete:	f'_c = 5,000 psi Type: cracked
Anchor bolt:	Material: ASTM A449 1" diameter, f_y = 92,000 psi, f_{ut} = 120,000 psi
Nut:	Type: heavy hex, Nut, h = 0.98 in., F_{nut} = 1.625 in., G_{nut} = 1.875 in. *Reference: For F and G, see ASM D18.2.2*
Washer:	Washer width, b_w = 2.75 in. Minimum washer thickness, t = 0.625 in.
Reinforcement:	f_y = 60,000 psi

Dimensions

Slab thickness: t = 12 in.
Initial anchor: h_{ef} = 9.39 in.
h_{ef} x 1.5 = 14.09 in.

where h_{ef} is based on Simpson Strong-Tie ABL height, heavy hex nut height and plate thickness.

Anchor reinforcement
Bottom cover: 0.75 in.

Per ACI 318-14, 17.4.2.8: Project the failure surface, c, outward 1.5h_{ef} from the effective perimeter of the plate.

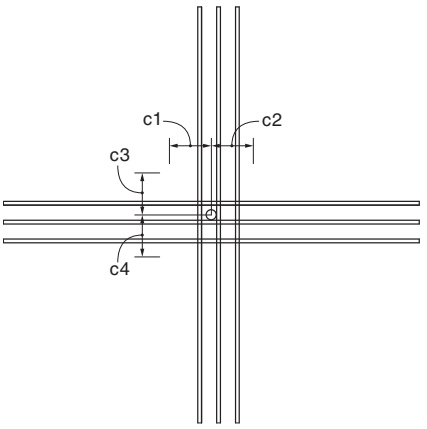

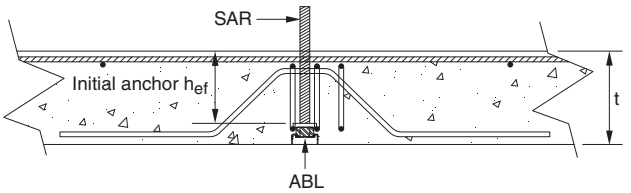

Tension Design Calculations (ACI 318-14) — Used for 17.2.3.4.3 "Ductility" Tensile Requirements for SDC C–F

17.4.1 — Steel Strength for Anchor in Tension $n = 1$ *Reference: [Eq. 17.4.1.2]*

Where: $N_{sa} = nA_{se}f_{uta}$ d_o = 1 in.

$n_t = 8$

$$A_{se} = \frac{\pi}{4}\left(d_o - \frac{0.9743}{n_t}\right)^2$$

A_{se} = 0.606 in.^{2} *Reference: [R17.4.1.2]*
Not to exceed 1.9 x f_y =174,800 psi or 125,000 psi

f_{uta} = 120,000 psi *Reference: [17.4.1.2]*

N_{sa} = 72,698 lb.

Shallow Podium Anchorage Design Example (cont.)

Anchorage Calculation Using Anchor Reinforcement

17.4.2 — Concrete Breakout Strength of Anchor Only in Tension

$N_{cb} = \frac{A_{Nc}}{A_{Nco}} \psi_{ed,N}\, \psi_{c,N}\, N_b$ — *Reference: [Eq. 17.4.2.1 (a)]*

Where: $A_{Nco} = 9h_{ef}^2 = 794$ in.^{2} — *Reference: [Eq. 17.4.2.1 (c)]*

$A_{Nc} = (C_1 + C_2) \times (C_3 + C_4)$ where C_1 to C_4 shall not exceed $1.5h_{eff} = 14.09$ in. — *Reference: [17.4.2.1]*

Increase A_{Nc} per 17.4.2.8

$A_{Nc} = 963.90$ in.^{2}

$\psi_{ed,N} = 1.00$ — $\psi_{ed,N} = 1$ if $C_{min} > 1.5h_{eff}$ — *Reference: [Eq. 17.4.2.5 (a)]*

$\psi_{c,N} = 1.00$ — $\psi_{c,N} = 1.0$ for cracked concrete — *Reference: [17.4.2.6]*

$N_b = k\sqrt{f'_c\, h_{ef}^{1.5}}$ — *Reference: [Eq. 17.4.2.2 (a)]*

where, $k = 24$ for cast-in-place anchors and if — *Reference: [17.4.2.2]*

11 in. $< h_{eff} <$ 25 in. then $N_b = 16\sqrt{f'_c\, h_{ef}^{5/3}}$ — *Reference: [Eq. 17.4.2.2 (b)]*

$h_{eff} = 9.39$ in. — h_{eff} in Eq 17.4.2.1 (a) to 17.4.2.5 (b) shall be limited to $C_{max}/1.5$ when $C_{max} \leq 1.5h_{eff}$ (for 3 or 4 edges) — *Reference: [17.4.2.3]*

$N_b = 48{,}836$ lb.

N_{cb} = 59,312 lb.

17.4.3 — Anchor Pullout Strength (Initial A_{brg} for Plate Bearing for Pullout)

$N_{pn} = \psi_{c,P}\, N_p$ — *Reference: [Eq. 17.4.3.1]*

Where: $\psi_{c,P} = 1.00$ — $\psi_{c,P} = 1.0$ for cracked concrete — *Reference: [17.4.3.6]*

$N_p = A_{brg}\, 8\, f'_c$ — *Reference: [Eq. 17.4.3.4]*

$A_{brg} = [(\pi \times D_{Abrg}^2/4)]$ – Area of Rod — $D_{Abrg} = \min.\ (F_{nut} + 2t),\ b_w$

$A_{brg} = 5.154$ in.^{2}

N_p = 206,167 lb.

17.4.4 — Concrete Side-Face Blowout Strength

$N_{sb} = 160\, c_{a1}\sqrt{A_{brg}}\sqrt{f'_c}$ — Required only if anchor is near an edge where $c_{a1} < 0.4h_{eff}$ — *Reference: [Eq. 17.4.4.1]*

N_{sb} = No close edge — N_{sb} = Not applicable

17.2.3.4.3(a) — Ductility Check (Required for SDC C–F)

Reference: ACI 318-14

$N_{sa} = 72{,}689$ lb. — *Reference: [17.2.3.4.3 (a)]*

$1.2N_{sa} = 87{,}227$ lb.

For initial breakout (without anchor reinforcement), check $1.2N_{sa} < N_{cb}$

$N_{cb} = 59{,}312$ lb. $<$ 87,227 lb., therefore non-ductile. Add anchor reinforcement.

For pullout, check $1.2N_{sa} < N_{pn}$

$N_{pn} = 206{,}167$ lb. $>$ 87,227 lb., therefore ductile for pullout.

Shallow Podium Anchorage Design Example (cont.)

Anchorage Calculation Using Anchor Reinforcement

Anchor Reinforcement Estimate by Applying Sections 17.3.2.1 and 17.4.2.9

Estimate anchor reinforcement quantity by achieving $1.2N_{sa} < N_n$ per 17.2.3.4.3,

Where $N_n = N_n$ rebar

Anchor reinforcement size placed at 45-degree angle #5 $A_s = 0.31$ in.^{2} $f_y = 60{,}000$

$1.2N_{sa} = nA_sf_y\,(0.707)$ d rebar = 0.625 in.

$$n = \text{number of legs} = \frac{1.2N_{sa}}{A_sf_y\,(0.707)} = 6.67, \text{ Use 8 legs}$$

Anchor reinforcement to be within $0.5h_{ef}$ of anchor

$N_{n\ rebar\ estimate} = nA_sf_y \times 0.707 = 105{,}202$ lb. > 87,227 lb.

Determine Anchorage System Capacity When Anchor Reinforcement Is Added

Testing performed by Simpson Strong-Tie indicates that when anchor reinforcement (A.R.) is added to these shallow slabs, ultimate capacity is a combination of A.R. resistance acting simultaneously with concrete breakout resistance.

Design Approach Using Empirical Data per Test Output

Using the test results, the % contribution to the measured peak capacity of both the inner concrete cone and the Anchor Reinforcement (A.R.) were determined. Both of these contributions are dependent on slab thickness.

Inner Concrete Cone Contribution:
For inner concrete cone, that percentage contribution is based on a comparison of the Normalized Breakout Capacity vs. the Calculated Uncracked Breakout Capacity.

Anchor Reinforcement Contribution:
For anchor reinforcement contribution, that percentage is based on a comparison of the Maximum Possible A.R. Contribution vs. Measured A.R. Contribution.

Determine Design Limit for Anchor Reinforcement (A.R.) + Inner Concrete Cone

Inner Concrete Cone Contribution:
Based on testing, 41% of the contribution is coming from the inner concrete cone.

Anchor Reinforcement Contribution:
Based on testing, 100% of the anchor reinforcement is contributing.

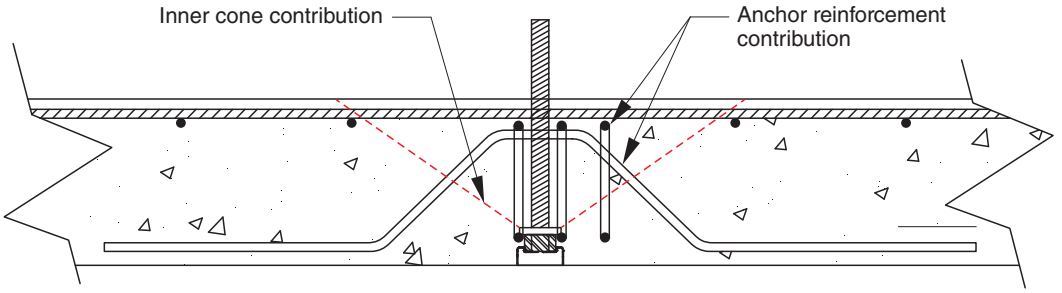

Contributions of Cone and Anchor Reinforcement Based on Empirical Findings

Shallow Podium Anchorage Design Example (cont.)

Anchorage Calculation Using Anchor Reinforcement

Vertical Block Shear Limit State Consideration for Shallow Slabs

Testing indicates that an additional failure mode is possible with a shallow embedment when resisting the breakout area with anchor reinforcement. A vertical "block shear" can form at the outer edges of the bearing plate. This "block shear" is separate from pullout and is dependent on embedment depth, bearing surface area and concrete strength.

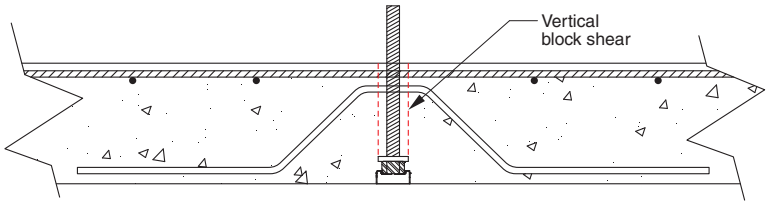

Block Shear at Anchor Bearing Plate

Size bearing plate so that "block shear" is not the design limit state.

LRFD Design Strength Capacity Summary

$\phi = 0.70$	For all concrete-governed limit states	*Reference: ACI 318-14*
$\phi = 0.75$	For anchor steel strength limit state	*Reference: [17.3.3]*
$\phi = 0.75$	For anchor reinforced per ACI 318-14, Chapter 21	*Reference: [17.4.2.9]*
$S_F = 0.75$	Seismic factor, $S_F = 0.75$, (for use with concrete limit only)	*Reference: [17.2.3.4.4]*

LRFD Limit

1. ACI 318 anchor steel strength in tension, ϕN_{sa} = 54,517 lb. *Reference: [17.4.1]*

(2a. Concrete breakout strength of anchor reinforced system per empirical findings, Seismic), $\phi N_{cb\ empirical} \times S_F$

(2b. Anchor reinforcement contribution of system per empirical findings, Seismic), $\phi N_{n\ rebar\ empirical}$ *Reference: based on empirical data*

2. Sum of empirical concrete breakout + empirical anchor reinforcement, $\phi N_{cb\ empirical} \times S_F + \phi N_{n\ rebar\ empirical}$

3. Pull-out strength, $\phi N_{pn} S_F$ *Reference: [17.4.3.3]*

4. Side-face blowout strength, $\phi N_{sb} S_F$ = No close edge *Reference: [17.4.4]*

5. Block shear strength, $\phi N_{block\ shear}$ *Reference: based on empirical data*

LRFD limits 1–5 consider ACI 318 strength level values

Governing LRFD capacity = 54,517 lb. 1. Anchor tension controls at LRFD

Shallow Podium Anchorage Design Example (cont.)

Anchorage Calculation Using Anchor Reinforcement

Anchor Reinforcement Layout Summary

Anchor reinforcement bar: #5 A.R. legs

Full bars: 4 bars

Min. bottom clear cover: 0.75 in. Shallow anchor assembly kit: SA1-8H-XXKT

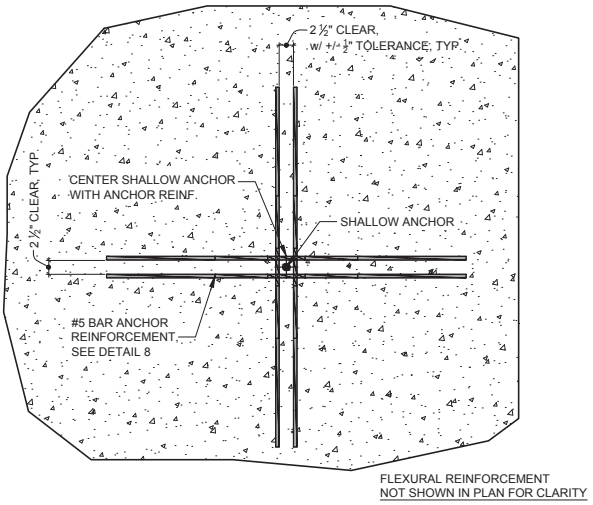

AWAY FROM EDGE 4-BAR PLAN

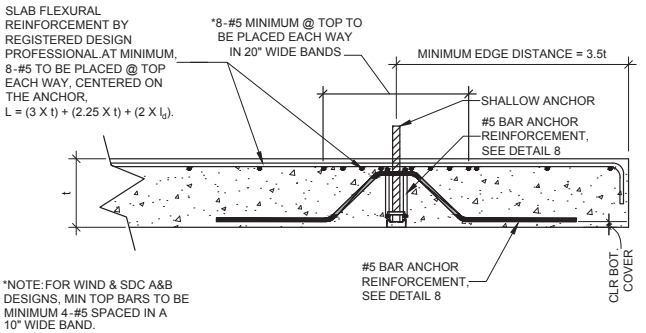

AWAY FROM EDGE 4-BAR SECTION

Anchor Reinforcement Detail: 2/SA1

For complete design example calculations of solutions shown in the Simpson Strong-Tie anchorage design tables, go to **strongtie.com/srs**.

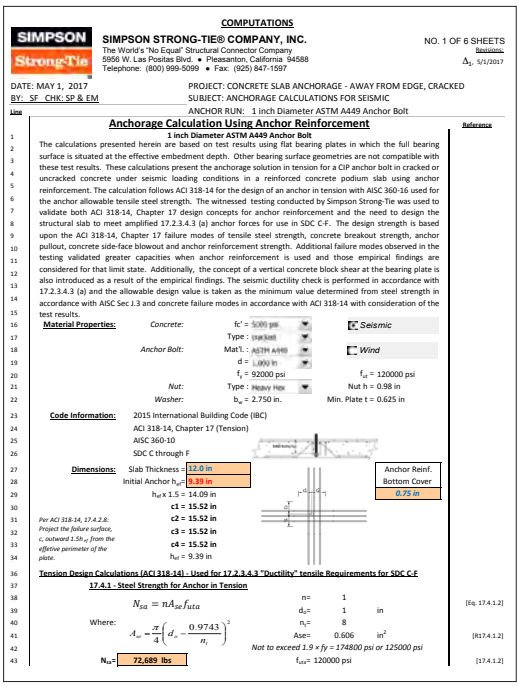

COMPUTATIONS

SIMPSON STRONG-TIE® COMPANY, INC.
The World's "No Equal" Structural Connector Company
5956 W. Las Positas Blvd. • Pleasanton, California 94588
Telephone: (800) 999-5099 • Fax: (925) 847-1597

NO. 1 OF 6 SHEETS
Revisions
Δ_1: 5/1/2017

DATE: MAY 1, 2017
BY: SF CHK: SP & EM

PROJECT: CONCRETE SLAB ANCHORAGE - AWAY FROM EDGE, CRACKED
SUBJECT: ANCHORAGE CALCULATIONS FOR SEISMIC
ANCHOR RUN: 1 inch Diameter ASTM A449 Anchor Bolt

Line | Reference

Anchorage Calculation Using Anchor Reinforcement

1 inch Diameter ASTM A449 Anchor Bolt

The calculations presented herein are based on test results using flat bearing plates in which the full bearing surface is situated at the effective embedment depth. Other bearing surface geometries are not compatible with these test results. These calculations present the anchorage solution in tension for a CIP anchor bolt in cracked or uncracked concrete under seismic loading conditions in a reinforced concrete podium slab using anchor reinforcement. The calculation follows ACI 318-14 for the design of an anchor in tension with AISC 360-16 used for the anchor allowable tensile steel strength. The witnessed testing conducted by Simpson Strong-Tie was used to validate both ACI 318-14, Chapter 17 design concepts for anchor reinforcement and the need to design the structural slab to meet amplified 17.2.3.4.3 (a) anchor forces for use in SDC C-F. The design strength is based upon the ACI 318-14, Chapter 17 failure modes of tensile steel strength, concrete breakout strength, anchor pullout, concrete side-face blowout and anchor reinforcement strength. Additional failure modes observed in the testing validated greater capacities when anchor reinforcement is used and those empirical findings are considered for that limit state. Additionally, the concept of a vertical concrete block shear at the bearing plate is also introduced as a result of the empirical findings. The seismic ductility check is performed in accordance with 17.2.3.4.3 (a) and the allowable design value is taken as the minimum value determined from steel strength in accordance with AISC Sec.I.3 and concrete failure modes in accordance with ACI 318-14 with consideration of the test results.

Material Properties: *Concrete:* f_c' = 5,000 psi; Type: normal; ☑ *Seismic*
Anchor Bolt: Mat'l.: ASTM A449; d = 1.000 in; f_y = 92000 psi; ☐ *Wind*; f_{ut} = 120000 psi
Nut: Type: Heavy Hex; Nut h = 0.98 in
Washer: h_w = 2.750 in. Min. Plate t = 0.625 in

Code Information: 2015 International Building Code (IBC)
ACI 318-14, Chapter 17 (Tension)
AISC 360-10
SDC C through F

Dimensions: Slab Thickness = 12.0 in
Initial Anchor h_{ef} = 9.39 in
h_{ef} x 1.5 = 14.09 in
c1 = 15.52 in
c2 = 15.52 in
c3 = 15.52 in
c4 = 15.52 in
h_{ef} = 9.39 in

Anchor Reinf. Bottom Cover: 0.75 in

Per ACI 318-14, 17.4.2.8: Project the failure surface, c_a outward 1.5h_{ef} from the effective perimeter of the plate.

Tension Design Calculations (ACI 318-14) - Used for 17.2.3.4.3 "Ductility" tensile Requirements for SDC C-F

17.4.1 - Steel Strength for Anchor in Tension

$$N_{sa} = nA_{se}f_{uta}$$ [Eq. 17.4.1.2]

Where: $$A_{se} = \frac{\pi}{4}\left(d_a - \frac{0.9743}{n_t}\right)^2$$ [R17.4.1.2]

n= 1; d_a= 1 in; n_t= 8; Ase= 0.606 in²

Not to exceed 1.9 × fy = 174800 psi or 125000 psi

N_{sa}= 72,689 lbs; f_{uta}= 120000 psi [17.4.1.2]

F Compression Posts

Compression posts play an integral role in designing a Strong-Rod Anchor Tiedown System for shearwall overturning restraint. As tension loads are resisted by the Strong-Rod ATS steel rods, adequate compression elements are crucial in the opposite end of the shearwall. Compression posts are either single members or multiple members. A Designer may use either a symmetrical or an asymmetrical post configuration. These elements are specified by the Designer. Simpson Strong-Tie offers guidance by providing standard tables for compression elements. See **strongtie.com/srs** for more information.

Asymmetrical Posts

This arrangement means that a maximum of three built-up studs at the end of the wall and multiple number of studs at the opposite side of the Strong-Rod. This provides uniform anchor placement and consistent end-of-wall placement location at upper floor levels.

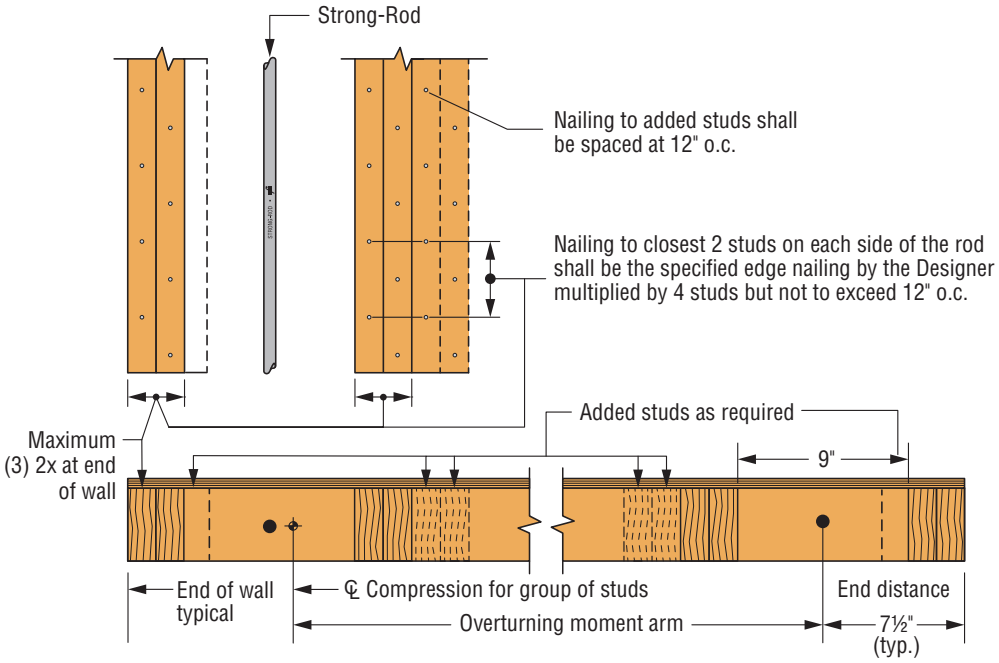

Estimate of Moment Arm = Wall Length – End Distance – Center of Gravity of Compression End

Nailing Example: (4) total closest compression members adjacent to rod: 2" o.c. edge nailing x 4 = 8" o.c. nailing to two closest studs, each side of rod.

Cavity Space (in.)	End Distance (in.)			
	(2) 2x End Member	(3) 2x End Member	4x End Member	6x End Member
6	6	7.5	6.5	8.5
9	7.5	9	8	10

F Compression Posts (cont.)

Symmetrical Posts

An equal number of posts or studs on each side of the Strong-Rod. End of the shearwall requires extra framing to maintain edge-of-wall line.

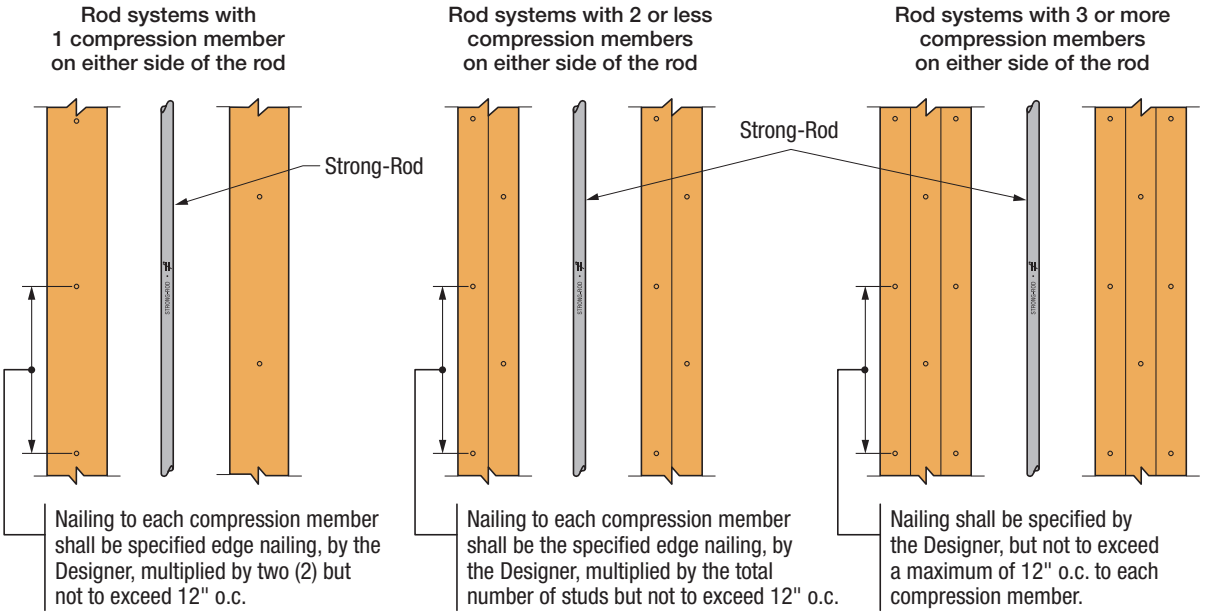

Moment Arm = Center of Rod to Center of Rod
Nailing Example: (4) total compression members: 2" o.c. edge nailing x 4 = 8" o.c. nailing at each compression member.

From the Roof to the Foundation Anchorage

Components for Anchor Tiedown System for Shearwall Overturning Restraint

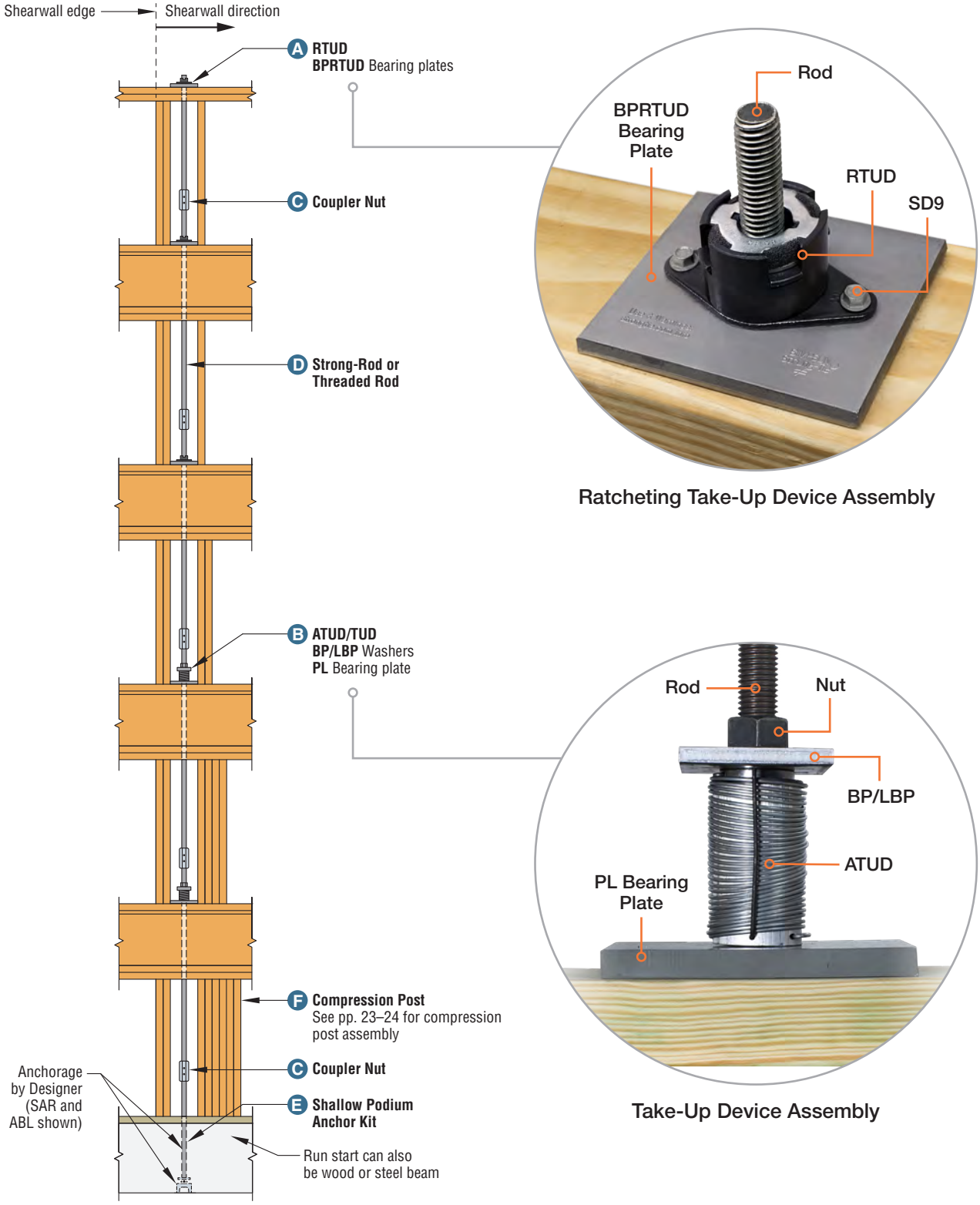

Note: Third stud may be required at shearwall edge.

A RTUD Ratcheting Take-Up Device

The RTUD ratcheting take-up device is a cost-effective shrinkage compensation solution for continuous rod systems. The RTUD is code-listed for use with rod systems to ensure highly reliable performance in a device that allows for unlimited shrinkage. The RTUD should be hand installed until the base of the device fully bears on top of the BPRTUD. Once the fastener holes are aligned and the RTUD is flush, install the Strong-Drive® fasteners. Once the RTUD is installed, a series of internal threaded wedges enable the device to ratchet down the rod as the wood structure shrinks, but engage the rod in the reverse direction under tensile loading. Engagement is maintained on the rod by the take-up device, enabling the rod system to perform as designed from the time of installation. Before activating an ATUD make sure the pin on the take-up device on the floor below has been pulled.

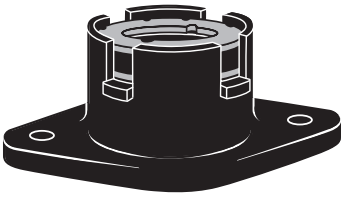

RTUD
Patent Pending

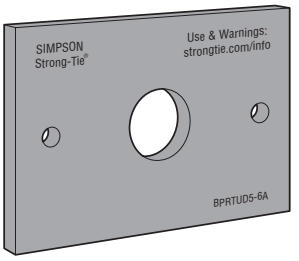

BPRTUD5-6A

RTUD Models

Model No.	Threaded Rod Diameter (in.)	Dimensions (in.)			Allowable Load (lb.)	Seating Increment, Δ_R (in.)	Deflection at Allowable Load, Δ_A (in.)	Compatible Bearing Plates
		Length	Width	Height				
RTUD4B	½	2¾	1½	1	9,210	0.040	0.003	BPRTUD3-4B
RTUD5	⅝	3⅞	2	1⅜	14,495	0.056	0.007	BPRTUD5-6*
RTUD6	¾	3⅞	2	1⅜	20,830	0.057	0.010	BPRTUD5-6*

1. Allowable loads are for RTUD only. The attached components must be designed to resist design loads in accordance with the applicable code.
2. Thread specification for threaded rod used with the RTUD must be UNC Class 2A or 1A in accordance with ANSE/ASME B1.1.
3. No further increase in allowable load is permitted.
4. RTUD4B fastens to the wood plate with the BPRTUD bearing plate and (2) #9 x 1½" or 2½" Strong-Drive SD Connector screws. RTUD5-6 fastens to the wood plate with the BPRTUD bearing plate and (2) #9 x 2½" Strong-Drive SD Connector screws.
5. The specified minimum tensile strength, F_u, of the threaded rod must not exceed 125 ksi for the RTUD4B, RTUD5 and RTUD6.

** Refer to BPRTUD table below.*

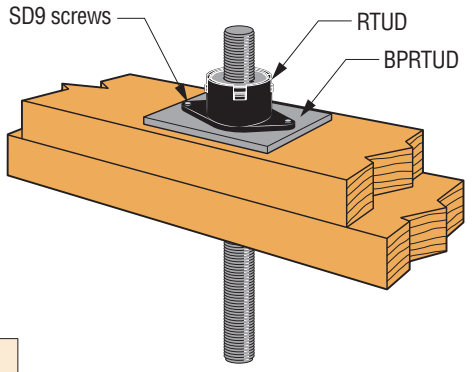

Ratcheting Take-Up Device Assembly Installation

BPRTUD Models

Model No.	Length (in.)	Width (in.)	Thickness	Hole Diameter (in.)	Allowable Load (lb.)			
					DF	SP	HF	SPF
BPRTUD3-4B	3½	3	3 ga.	⅝	6,415	5,975	4,475	4,700
BPRTUD5-6A	4½	3	3 ga.	1	7,080	6,575	5,175	5,355
BPRTUD5-6B	5½	3	½ in.	1	10,295	9,305	6,670	7,000
BPRTUD5-6C	7½	3	¾ in.	1	13,385	12,100	8,675	9,105

1. No further increase in allowable load permitted.
2. Plate bearing area based on rod diameter plus ¼"-diameter drilled hole through wood plate below steel bearing plate. Reduce allowable load per code for larger holes.
3. Bearing plate load capacity is based on the steel plate bearing on the wood sole plate perpendicular to the grain and steel plate bending in cantilever action.

Naming Legend

RTUD5

- Type of Take-Up Device
- Rod Diameter in ⅛" Increments (Ex: 5 = ⅝")

SIMPSON Strong-Tie®

B ATUD/TUD Take-Up Device

The ATUD and TUD expanding take-up devices are suitable for rod diameters from ½" up to 1¾" and shrinkage up to 3". Expanding screw-style take-up devices provide the lowest device displacements. For installation, ensure that the activation pin is pointing up and facing toward the inside of the building space. The pin can be pulled anytime after the nut has been tightened onto the top bearing plate and must be pulled by the time the building is fully loaded. Shrinkwrap should remain on the device until the pin is ready to be pulled. Before activating an ATUD make sure the pin on the take-up device on the floor below has been pulled.

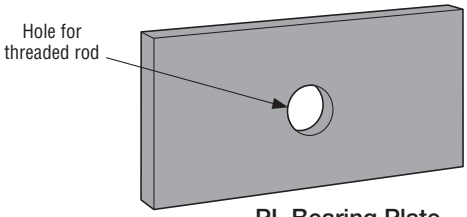

PL Bearing Plate

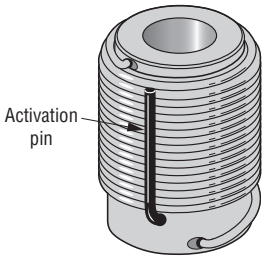

ATUD9

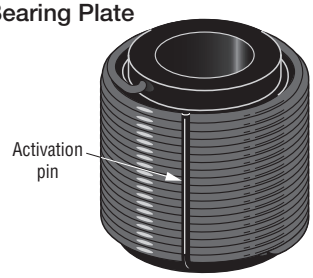

TUD10

ATUD/TUD Models

Model No.	Threaded Rod Diameter (in.)	Dimensions (in.)		Rated Compensation Capacity, (in.)	Allowable Load (lb.)[1,2]	Seating Increment, Δ_R (in.)[3]	Deflection at Allowable Load, Δ_A (in.)[3]	Bearing Plate Above ATUD/TUD	Bearing Plate Below ATUD/TUD
		Width	Length						
TUD9	1⅛	2⅛	2¼	1	34,655	0.001	0.014	BP	PL9
TUD10	1¼	2⅜	2¼	1	45,400	0.001	0.033	BP	PL10
ATUD5	⅝	1⅜	1⅞	¾	6,565	0.001	0.009	LBP	PL5
ATUD6-2	¾	1¾	3⅛	2	11,430	0.004	0.022	BP	PL5/PL6
ATUD9	1⅛	2⅛	2¼	1	15,560	0.002	0.013	BP	PL9
ATUD9-2	1⅛	2⅛	3⅞	2	12,790	0.002	0.037	BP	PL9
ATUD9-3	1⅛	2⅛	5	3	11,830	0.002	0.034	BP	PL9
ATUD14	1¾	2⅞	2¼	¾	24,395	0.005	0.015	BP	PL14
NEW ATUD14-2	1¾	3	3⅞	2	28,310	0.002	0.013	BP	PL14

1. Allowable compression capacities are for TUD or ATUD only and are based on ICC-ES ESR-2320.
2. No further increase in allowable load is permitted.
3. Total device deflection = $\Delta_T = \Delta_R + \Delta_A(P_D/P_C)$, where P_D = Demand Load; P_C = Allowable Load.

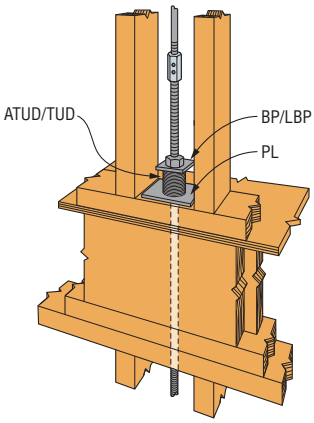

Typical Take-Up Device Assembly Installation

Bearing Plate Models

Model No.	Dimensions (in.)				Allowable Load (lb.)			
	Width	Length	Thickness	Hole Dia.	DF	SP	HF	SPF
BP⅝	2½	2½	¼	11/16	4,060	3,670	2,630	2,760
BP¾	2¾	2¾	5/16	13/16	4,815	4,350	3,120	3,275
PL5-3x3.5	3	3½	⅜	11/16	6,850	6,190	4,440	4,660
PL5-3x5.5	3	5½	½	11/16	9,900	9,325	6,880	7,220
PL6-3x3.5	3	3½	⅜	13/16	6,720	6,075	4,355	4,570
PL6-3x5.5	3	5½	½	13/16	10,275	9,485	6,800	7,135
PL9-3x5.5	3	5½	½	1 3/16	10,025	9,060	6,495	6,815
PL9-3x8.5	3	8½	⅞	1 3/16	15,010	13,570	9,725	10,205
PL14-3x8.5	3	8½	⅞	1 13/16	13,975	12,635	9,055	9,500
PL9-3x12	3	12	1¼	1 3/16	21,570	19,500	13,980	14,670
PL14-3x12	3	12	1¼	1 13/16	20,535	18,565	13,310	13,965
PL9-3x15	3	15	1½	1 3/16	25,690	24,315	17,625	18,495
PL10-3x15	3	15	1½	1 5/16	25,985	24,425	17,510	18,375
PL14-3x15	3	15	1½	1 13/16	26,060	23,650	16,955	17,790
PL9-5x5.5	5	5½	½	1 3/16	17,370	15,700	11,255	11,810
PL14-5x5.5	5	5½	½	1 13/16	16,260	14,700	10,540	11,060
PL9-5x8.5	5	8½	⅞	1 3/16	25,635	23,175	16,610	17,430
PL14-5x8.5	5	8½	⅞	1 13/16	24,600	22,240	15,940	16,725
PL9-5x12	5	12	1¼	1 3/16	36,570	33,060	23,700	24,870
PL10-5x12	5	12	1¼	1 5/16	36,395	32,900	23,585	24,750

1. Secure BP and PL bearing plates to framing with washer and ATS-N_nut over ATUD or TUD.
2. Secure ATS-BP bearing plates to framing with ATS-IN_KT isolator nut kit.
3. Bearing plate loads are based on a hole through the wood plate below that is ¼" larger in diameter than the rod.

C Coupler Nuts

CNW and ATS-C coupler nuts are used to connect one threaded rod to another and connect to anchor bolts within the Strong-Rod Anchor Tiedown System for shearwall overturning restraint. CNWs and ATS-C coupler nuts exceed the tensile capacity of the corresponding standard-strength threaded rod. ATS-HSC coupler nuts exceed the tension capacity of the corresponding high-strength threaded rod. All couplers have a testing protocol to ensure that the proper loads are achieved.

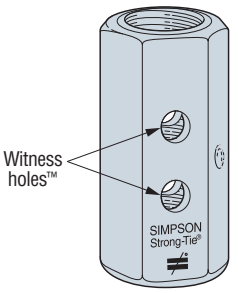

CNW or ATS-C

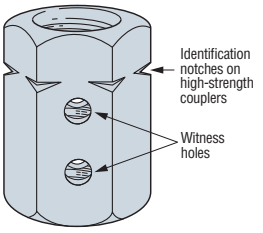

High-Strength Coupler ATS-HSC or ATS-HSSC

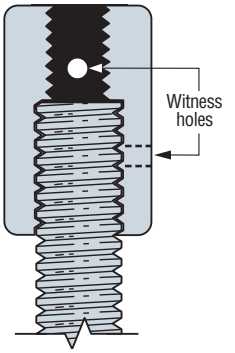

Transition Coupler Nut

Coupler Nut Models

Rod Dia. (in.)	—	½	⅝	¾	⅞	1	1⅛	1¼	1½	1¾	2
	CNW⅜	—	—	—	—	—	—	—	—	—	—
½	—	CNW½ ATS-HSC44	ATS-HSC54	ATS-HSC64	ATS-HSC74	ATS-HSC84	ATS-HSC94	ATS-HSC104	ATS-HSC124	ATS-HSC144	ATS-HSC164
⅝	—	ATS-C54	CNW⅝ ATS-HSC55	ATS-HSC65	ATS-HSC75	ATS-HSC85	ATS-HSC95	ATS-HSC105	ATS-HSC125	ATS-HSC145	ATS-HSC165
¾	—	ATS-C64	ATS-C65	CNW¾ ATS-HSC66	ATS-HSC76	ATS-HSC86	ATS-HSC96	ATS-HSC106	ATS-HSC116	ATS-HSC126	ATS-HSC166
⅞	—	ATS-C74	ATS-C75	ATS-C76	CNW⅞ ATS-HSC77	ATS-HSC87	ATS-HSC97	ATS-HSC107	ATS-HSC127	ATS-HSC147	ATS-HSC167
1	—	ATS-C84	ATS-C85	ATS-C86	ATS-C87	CNW1 ATS-HSC88	ATS-HSC98	ATS-HSC108	ATS-HSC128	ATS-HSC148	ATS-HSC168
1⅛	—	ATS-C94	ATS-C95	ATS-C96	ATS-C97	ATS-C98	ATS-C199 ATS-HSC199	ATS-HSC109	ATS-HSC129	ATS-HSC149	ATS-HSC169
1¼	—	ATS-C104	ATS-C105	ATS-C106	ATS-C107	ATS-C108	ATS-C109	ATS-C1010 ATS-HSC1010	ATS-HSC1210	ATS-HSC1410	ATS-HSC1610
1½	—	ATS-C124	ATS-C125	ATS-C126	ATS-C127	ATS-C128	ATS-C129	ATS-C1210	ATS-C1212 ATS-HSC1212	ATS-HSC1412	ATS-HSC1612
1¾	—	ATS-C144	ATS-C145	ATS-C146	ATS-C147	ATS-C148	ATS-C149	ATS-C1410	ATS-C1412	ATS-C1414 ATS-HSC1414	ATS-HSC1614
2	—	ATS-C164	ATS-C165	ATS-C166	ATS-C167	ATS-C168	ATS-C169	ATS-C1610	ATS-C1612	ATS-C1614	ATS-C1616 ATS-HSC1616

1. All ATS couplers available in high strength, ATS-HSCxx with ATS-HSRxx or ATS-SRxH rod.
2. All ATS couplers available with one side with over-sized threads, ATS-Cxx-OST, ATS-HSCxx-OST, ATS-HSSCxx-OST.
3. All CNW couplers are zinc plated.
4. All ATS couplers come in high strength for ¾" and 1" size, HSCNW¾ and HSCCNW1, respectively.
5. CNW couplers in the 14 and 16 series may be cylindrical.
6. All couplers available in hot-dip galvanized, CNx/x-x/x-HDG.
7. All couplers available in stainless steel, CNx/x-x/x-SS.

SIMPSON Strong-Tie®

D Steel Strong-Rods

Strong-Rod threaded rods are the tension transfer element within the Anchor Tiedown System for shearwall overturning restraint. Strong-Rod threaded rods are threaded on both ends, with the top end having 12" or 48" of thread to allow for the distance that the rod sticks through the device, which can vary from a couple inches. Information clearly etched on the shank allows easy identification in the field.

Naming Legend

ATS-SR9H

- ATS — Anchor Tiedown System
- SR — Strong-Rod
- 9 — Rod Diameter in ⅛" Increments (Ex: 9 = ⅝" or 1⅛")
- H — High Strength

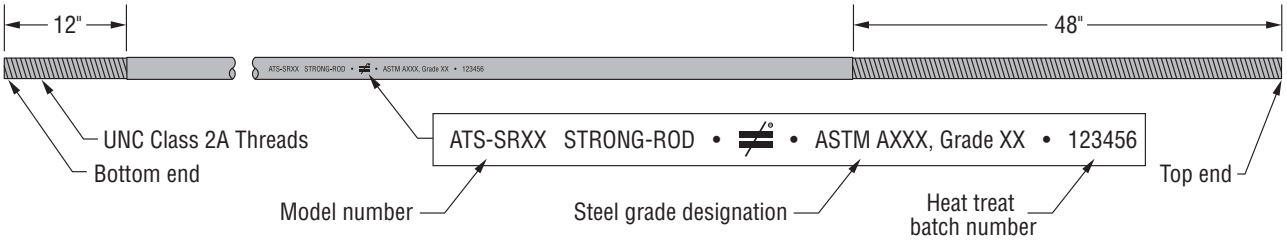

Strong-Rod

Standard-Strength, Strong-Rod Product Data

Anchor Tiedown System				
Allowable Tension Capacity for ATS Strong-Rods				
Rod Model No.	Rod Diameter (in.)	Material		Allowable Tension Capacity[2] (lb.)
		F_y (ksi)	F_u (ksi)	
ATS-SR4	½	36	58	4,270
ATS-SR5	⅝	36	58	6,675
ATS-SR6	¾	36	58	9,610
ATS-SR7	⅞	36	58	13,080
ATS-SR8	1	36	58	17,080
ATS-SR9	1⅛	36	58	21,620
ATS-SR10	1¼	36	58	26,690
ATS-SR11	1⅜	36	58	32,295
ATS-SR12	1½	36	58	38,435
ATS-SR14	1¾	36	58	52,315
ATS-SR16	2	36	58	68,330

1. Allowable tension capacities are based on AISC 360-10.
2. No further increase in allowable load is permitted.

High-Strength, Strong-Rod Product Data

Anchor Tiedown System				
Allowable Tension Capacity for ATS Strong-Rods				
Rod Model No.	Rod Diameter (in.)	Material		Allowable Tension Capacity[2] (lb.)
		F_y (ksi)	F_u (ksi)	
ATS-SR5H	⅝	92	120	13,805
ATS-SR6H	¾	92	120	19,880
ATS-SR7H	⅞	92	120	27,060
ATS-SR8H	1	92	120	35,345
ATS-SR9H	1⅛	105	125	46,595
ATS-SR10H	1¼	105	125	57,525
ATS-SR11H	1⅜	105	125	69,605
ATS-SR12H	1½	105	125	82,835
ATS-SR14H	1¾	105	125	112,745
ATS-SR16H	2	105	125	147,260

1. Allowable tension capacities are based on AISC 360-10.
2. No further increase in allowable load is permitted.

Super High-Strength, Strong-Rod Product Data

Anchor Tiedown System				
Allowable Tension Capacity for ATS Strong-Rods				
Rod Model No.	Rod Diameter (in.)	Material		Allowable Tension Capacity[2] (lb.)
		F_y (ksi)	F_u (ksi)	
ATS-SR9H150	1⅛	130	150	55,915
ATS-SR10H150	1¼	130	150	69,030

1. Allowable tension capacities are based on AISC 360-10.
2. No further increase in allowable load is permitted.

D Steel Threaded Rods

Fully threaded rod (all-thread rod) is also available in standard-strength, high-strength and higher-strength rod material in diameters up to 2".

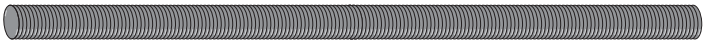

Fully Threaded Rod

Standard-Strength, Fully Threaded Rod

Model No.	Rod Diameter (in.)	F_y (ksi)	F_u (ksi)	Allowable Tension Capacity[2] (lb.)
ATS-R3	⅜	36	58	2,400
ATS-R4	½	36	58	4,270
ATS-R5	⅝	36	58	6,675
ATS-R6	¾	36	58	9,610
ATS-R7	⅞	36	58	13,080
ATS-R8	1	36	58	17,080
ATS-R9	1⅛	36	58	21,620
ATS-R10	1¼	36	58	26,690
ATS-R11	1⅜	36	58	32,295
ATS-R12	1½	36	58	38,435
ATS-R14	1¾	36	58	52,315
ATS-R16	2	36	58	68,330

1. Allowable tension capacities are based on AISC 360-10.
2. No further increase in allowable load is permitted.
3. Available in 1' increment up to 12'. Special sizes available upon request.

High-Strength, Fully Threaded Rod

Model No.	Rod Diameter (in.)	F_y (ksi)	F_u (ksi)	Allowable Tension Capacity[2] (lb.)
ATS-HSR4	½	92	120	8,835
ATS-HSR5	⅝	92	120	13,805
ATS-HSR6	¾	92	120	19,880
ATS-HSR7	⅞	92	120	27,060
ATS-HSR8	1	92	120	35,345
ATS-HSR9	1⅛	105	125	46,595
ATS-HSR10	1¼	105	125	57,525
ATS-HSR11	1⅜	105	125	69,605
ATS-HSR12	1½	105	125	82,835
ATS-HSR14	1¾	105	125	112,745
ATS-HSR16	2	105	125	147,260

1. Allowable tension capacities are based on AISC 360-10.
2. No further increase in allowable load is permitted.
3. Available in 1' increment up to 12'. Special sizes available upon request.

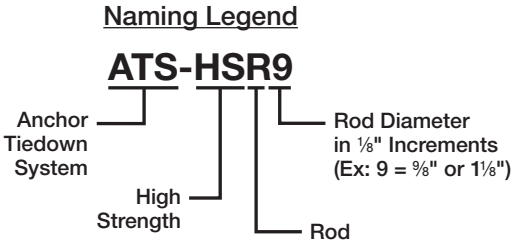

SIMPSON Strong-Tie®

E Shallow Podium Slab Anchor Kit

The Shallow Podium Slab anchor kit includes the patented Anchor Bolt Locator (ABL) and patent-pending Shallow Anchor Rod (SAR). Uniquely suited for installation to concrete-deck forms, the ABL enables accurate and secure placement of anchor bolts. The structural heavy hex nut is attached to a pre-formed steel "chair" and becomes the bottom nut of the anchor assembly. The shallow anchor is provided with a plate washer fixed in place that attaches on the ABL nut when assembled and increases the anchor breakout and pullout capacity. The shallow anchor is easily installed before or after placement of the slab reinforcing steel or tendons. Where higher anchor capacities are needed such as at edge conditions or to meet seismic ductility requirements, the anchor kit is combined with anchor reinforcement.

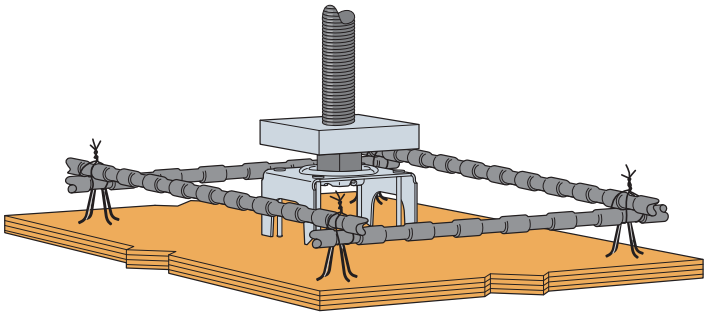

Shallow Podium Slab Anchor Kit

Naming Legend

SA1OST-8H-18KT

- SA — Shallow Anchor
- 1 — Standoff (1 for 1" cover)
- O — Oversize Threads (When hot-dip galvanized anchors are specified)
- 8 — Rod Diameter in ⅛" Increments (Ex: 8 = ⅝" or 1")
- H — High Strength
- 18 — Length (18", 24", 30", 36")
- KT — Kit (includes ABL and SAR)

SAR Shallow Anchor Rod

SAR anchor rods are for use with the ABL anchor bolt locator. They combine to make an economical podium-deck anchorage solution. Anchorage specification is per Designer.

Features:

- Proprietary and patent pending, pre-attached plate washer
- Available in standard or high strength
- Anchor rod diameters from ½" to 1¼"
- Standard lengths available 18", 24", 30" or 36"
- Specify "HDG" for hot-dip galvanized

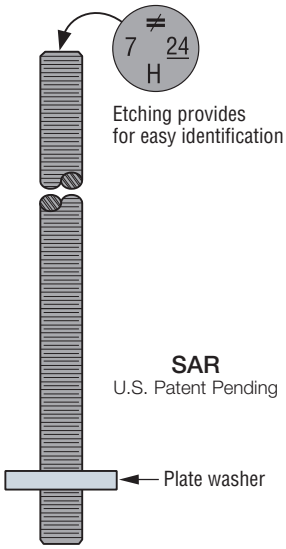

E Shallow Podium Slab Anchor Kit (cont.)

ABL Anchor Bolt Locator

The ABL enables the accurate and secure placement of anchor bolts on concrete-deck forms prior to concrete placement. The structural heavy hex nut is attached to a pre-formed steel "chair," which eliminates the need for an additional nut on the bottom of the anchor bolt.

Features:

- Designed for optimum concrete flow
- Installs with (2) nails or (2) screws
- Provides 1" standoff (clear cover)
- Available for anchor rod diameter ½" to 1¼"
- For use with hot-dip galvanized anchor rods, specify "OST" for oversized threads

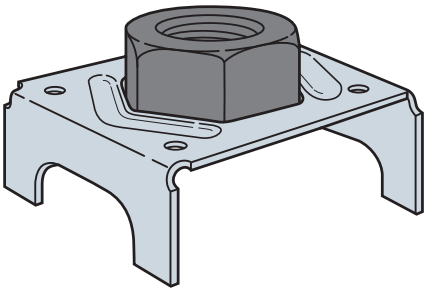

ABL
U.S. Patent 8,381,482

ABL Models

Model No.	Anchor Bolt Diameter (in.)
ABL4-1	½
ABL5-1	⅝
ABL6-1	¾
ABL7-1	⅞
ABL8-1	1
ABL9-1	1⅛
ABL-10	1¼

Rod System Design Considerations for Shearwall Overturning Restraint

When specifying Simpson Strong-Tie® Strong-Rod™ Anchor Tiedown System for shearwall overturning restraint, one should consider several factors to ensure that the system is configured to meet the design intent and building codes. These factors apply to each method of specification. The list on the left below delineates the general design requirements for any continuous rod tiedown system used to restrain overturning forces in stacked shearwalls. The list on the right provides a description of how our system is designed and of the services we provide in order to meet the general strength and performance requirements.

General Shearwall Overturning Restraint Rod System

Designer Responsibilities

- Calculating lateral forces in each floor and roof diaphragm (at diaphragm level) of structure
- Locating shearwalls in each level of the structure
- Calculating cumulative overturning tension and compression forces for each shearwall
- Design and specification of compression posts
- Design and specification of anchorage to foundation including anchor bolt diameter and grade of steel
- Drift Check (Seismic)

Information Required to Design Rod Tiedown System

- Building code edition
- Building jurisdiction deformation requirements, (if applicable) such as rod elongation and system deformation limits
- Cumulative overturning tension/compression forces
- Estimate of wood shrinkage per level
- Wood framing including size and species of stud, post, sill and sole plates as well as floor system type and depth
- Wall height (finish floor to ceiling)
- Anchor bolt size and grade at foundation
- Anchor bolt coating
- Run start above foundation such as steel or wood beam
- Run termination preference at top of run (top plate, bridge block, strap)
- Floor plan shearwall layout

Required Rod System Design Checks

- Tensile capacity of rod
- Bearing plate capacity
- Travel capacity of shrinkage take-up device
- Load capacity of shrinkage take-up device
- Rod elongation per level using net tensile area of rod
- Total system deformation per level
- Verification that rod elongation plus take-up device displacement is less than or equal to 0.2 inch. (Per ICC-ES AC316)
- or plan shearwall layout

Anchorage Design

- Anchorage design tools are available
- Anchorage design information conforms to AC 318 anchorage provisions and Simpson Strong-Tie testing

Simpson Strong-Tie Strong-Rod Design Checklist

Rod Tension (Overturning) Check

- Rods at each level designed to meet the cumulative overturning tension force per level as delivered from bearing plates and transfer it to the foundation
- Standard and high-strength steel rods designed not to exceed tensile capacity as defined in AISC specification
  a. Standard threaded rod based on 36/58 ksi (F_y/F_u)
  b. High-strength Strong-Rod up to 1" diameter based on 92/120 ksi (F_y/F_u)
  c. High-strength Strong-Rod for diameters 1⅛" and greater based on 105/125 ksi (F_y/F_u)
  d. H150 Strong-Rod based on 130/150 ksi (F_y/F_u)
- Rod elongation limits (see below)

Bearing Plate Check

- Bearing plates designed to transfer incremental overturning force per level into the rod
- Bearing stress on wood member limited in accordance with the NDS to provide proper bearing capacity and limit wood crushing
- Bearing plate thickness has been sized to limit plate bending in order to provide full bearing on wood member

Shrinkage Take-up Device Check

- Shrinkage take-up device is selected to accommodate estimated wood shrinkage to eliminate gaps in the system load path
- Load capacity of the take-up device compared with incremental overturning force to ensure that load is transferred into rod

Movement/Deflection Check

- System deformation is an integral design component impacting the selection of rods, bearing plates and shrinkage take-up devices
- Rod elongation plus take-up device displacement is limited to a maximum of 0.2 inch per level or as further limited by the requirements of the engineer or the governing authority having jurisdiction
- Total system deformation reported for use in Δ_a term (total vertical elongation of wall anchorage system) when calculating shearwall deflection
- Both seating increment (Δ_R) and deflection at allowable load (Δ_A) are included in the overall system movement. These are listed in the evaluation report ICC-ES ESR-2320 for take-up devices.

Optional Compression Post Design

- Compression post design can be performed upon request along with the Strong-Rod System
- Compression post design limited to buckling or bearing perpendicular to grain on wood plate

Anchor Tiedown System Design Example

The following design sample illustrates the steps that are used when the design professional determines lateral loads to the shearwall F_x, using proper code provisions, and then determines the resultant ASD level wall shear and overturning forces as distributed by the appropriate gravity and seismic code load combinations. These ASD loads are then provided to Simpson Strong-Tie in the form of cumulative tension (for rod design), incremental bearing (for take-up device and bearing-plate design) and cumulative compression (for when end-of-wall bearing post and stud design is requested). Simpson Strong-Tie will use this input to design the specific continuous Strong-Rod tiedown system as the tension restraint for the shearwall.

During the design process of the overall structure, the Designer will have already determined the wall length, minimum wall height-to-width ratios, sheathing thickness and grade, nailing schedule, Δ_a for horizontal drift (or Designer to assume $\Delta_a = 0.2$), floor-to-floor height (including floor depth to determine plate height) and all other requirements in accordance with the applicable building code.

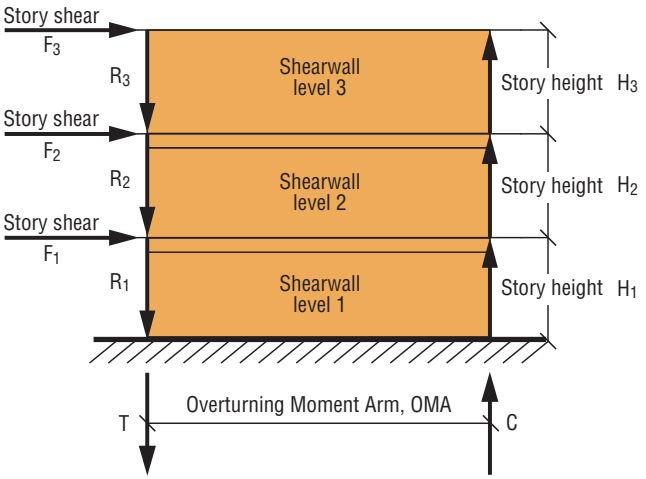

Figure 1

Shearwall Free Body Diagram Example

General Steps for Designing the Anchor Tiedown System

1. The Designer will calculate the cumulative overturning force at each level. These forces will be used to determine the end-of-wall incremental bearing, cumulative tension and cumulative compression. As these forces will initially be at strength level, the Designer must convert the loads to ASD and, for seismic, may use a 0.7 factor based on IBC load combinations.

2. Tabulate the incremental bearing, cumulative tension and cumulative compression and provide these values in the Designer structural drawing set. See sample below.

Sample End-of-Wall Forces Determined by Designer

Level	ASD Incremental Bearing, B (lb.)	ASD Cumulative Tension, T (lb.)	ASD Cumulative Compression, C (lb.)
3	4,000	4,000	5,000
2	7,000	11,000	13,500
1	9,000	20,000	24,000

1. Compression post design can be performed by SST upon request.
2. ASD end-of-wall values determined by Designer.
3. If compression post design is performed by SST, the end-of-wall forces to be verified by Designer if OMA is updated due to extent of post members.

Anchor Tiedown System Design Example (cont.)

3. Determine the tension rod size, rod strength and rod elongation. The demand tension loads used for rod design are the ASD cumulative tension uplift loads.

   a. Rod nominal tensile capacity is based on AISC 360-16, Eq. J3-1, $R_n = R_{nAB}$

   b. Allowable capacity = R_n/Ω, where $\Omega = 2.0$

   c. For elongation, the net tensile area, A_e, shall be used, where: $A_e = \frac{\pi}{4}\left(d_o - \frac{0.9743}{n_t}\right)^2$ and $\Delta = \frac{PL}{A_eE}$

4. The appropriate couplers should then be selected based on rod strength and diameter. These will be used to connect threaded rods to one another as well as coupling to the anchor bolts within the rod tiedown system. See Figure 2. Note that Simpson Strong-Tie coupler nuts exceed the tensile capacity of the rod and are designed to follow the provisions of AC391.

5. Next, determine the bearing-plate sizes and capacities. These plates are designed to transfer the ASD demand incremental bearing loads from the floor below via bearing from the top plate below, then through the blocking and the sole plate and into the rod via either a nut or an attached ratcheting device. See Figure 3.

   The design is based both on:

   a. Wood bearing perpendicular to the grain of the wood sole plate, $F'_{cperp} = F_{cperp} \times A_{bearing} \times C_b$. The bearing area should consider the hole diameter in the steel plate as well as the drilled hole through the wood sole plate. Simpson Strong-Tie recommends maintaining the drilled hole such that it is no more than ¼" greater in diameter than the steel rod.

   b. Steel-bearing-plate bending where the cantilever length can be taken from the face of the take-up device.

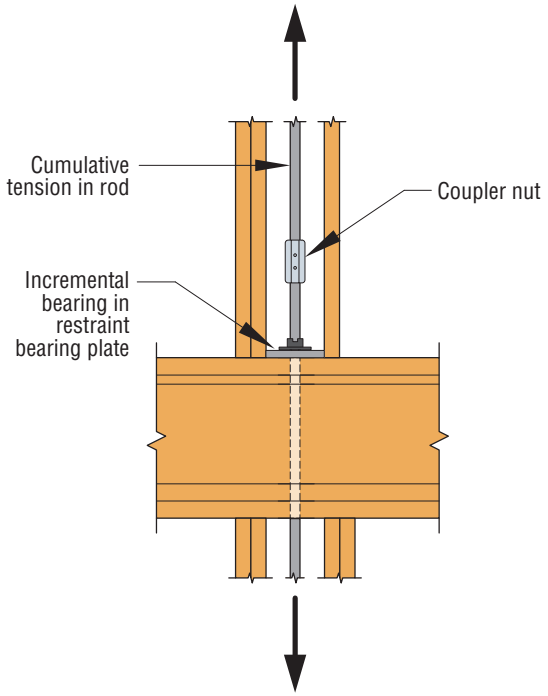

Figure 2

Rod Coupler Detail Example

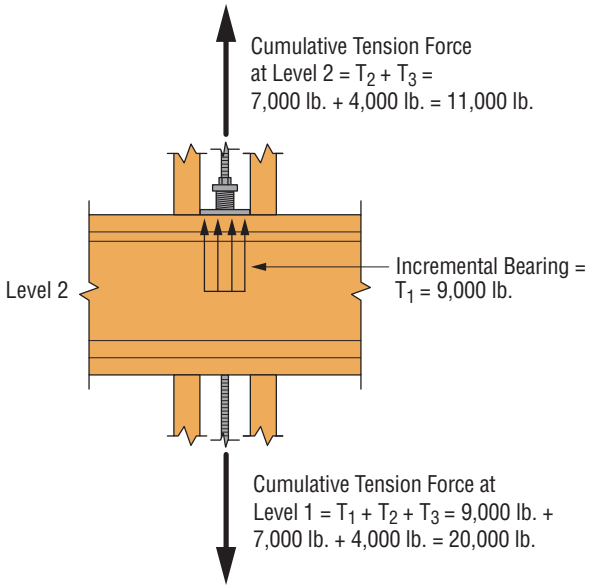

Figure 3

Bearing Plate Free Body Diagram Sample

Anchor Tiedown System Design Example (cont.)

6. Sole plate crushing/deformation (See Figure 4) should then be determined following the provisions of NDS Section 4.2.6. Though the standard equation of $F_{c\perp 0.02} = 0.73\ F_{c\perp}$ can be used for initially evaluating the deformation, it should be noted that the effects of wood crushing are not linear and must be evaluated based on specific loading. Refer to the NDS for the variables and conditions.

   a. Note that the initial crushing value calculated using the NDS equations will be at ASD load level and can be used for purposes of evaluating AC316 limits. For story drift per ASCE 7, when this value is being used for wall deformation, a strength-level value would need to be computed.

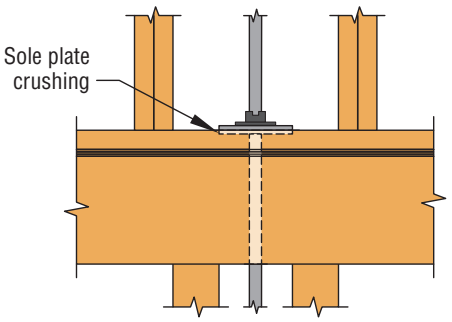

Figure 4
Sole Plate Crushing

7. Next, determine the take-up device type and size. The NDS and IBC require that consideration be given to the wood shrinkage, where the total shrinkage in wood-framed buildings can be estimated by adding up cross-grain shrinkage of the wall plates, sills and floor joists, as well as the small fraction of shrinkage that comes from the studs and posts. This calculation is important for avoiding gaps in the system as the wood shrinks while the rod doesn't. For the Simpson Strong-Tie wood shrinkage calculator, see **strongtie.com/webapps/woodshrinkage**. Also, note that shrinkage is cumulative going up the building.

   a. In order to compensate for building shrinkage and to help meet the shearwall code drift requirements, take-up devices are necessary with most wood structures greater than two stories tall. Take-up devices are either ratcheting devices that have unlimited shrinkage capacity or expanding devices that have a designated shrinkage capacity. The ASD incremental bearing load shall be used to design the strength of the device.

   b. The other variables used for selecting the take-up device are the associated rod diameter, seating increment Δ_R and deflection at the allowable load, Δ_A, where $\Delta_T = \Delta_R + \Delta_A\ (P_D/P_A)$.

8. Finally, a system deflection check per ICC-ES AC316, Section 6.0, Item 9 will be conducted.

   a. This system deflection check is at ASD level, and it limits rod elongation and the shrinkage compensating device deflection to 0.20" at each level or between restraints unless the shearwall drift is determined to be within code limits. Note that while the sole plate crushing value is an option to be considered when required by the local building jurisdiction, this is not a requirement per AC316.

   b. The 0.20" vertical displacement limit may be exceeded when it can be shown that the code story drift limit is not exceeded. This check must follow the provisions of ASCE 7-16, where loads and deformations are at strength level and shearwall deflection is per SDPWS, Eq. 4.3-1:

$$\delta_{SW} = \frac{8vh^3}{EAb} + \frac{vh}{1{,}000G_a} + \frac{h\Delta_a}{b}$$

9. Design of the shearwall chord boundary members, or the compression post members that are part of the shearwall associated with the continuous rod system, is an option that can be provided by Simpson Strong-Tie. These wood members are the vertical studs or posts at the end of the shearwalls that perform as the chords or boundary members of the system. The load path is such that the overturning moment is resolved into a tension/compression couple, creating equal and opposite axial tension and compression forces in each end of the wall. The Designer is responsible for establishing appropriate tributaries for the dead and live loads that are resolved into the cumulative compression — as well as the proper resultant lateral load — and for then utilizing the correct code load combinations. Key aspects to the end-of-wall compression member design are:

Anchor Tiedown System Design Example (cont.)

a. Determine the proper Overturning Moment Arm (OMA). In general, this length is measured from the center line of the tension rod at one end of the wall to the center of gravity of compression end at the other end of the wall.

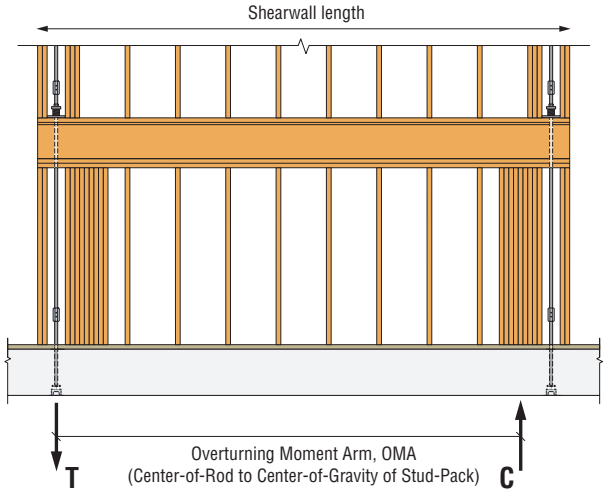

Figure 5

Overturning Moment Arm

b. Refer to NDS Table 4A for the proper wood design variables as well as NDS Table 4.3.1 for the proper F_{cperp}' perpendicular-to-wood-grain design equation. The NDS will also provide the appropriate adjustment factors to use, including the column stability factor equation, C_p, as well as the F_{cE} and C_p, C_f variables.

c. Determine the NDS Parallel-to-Grain Capacity.

d. Compute the ASD compression capacity of the end-of-wall wood members and determine the specific wood members to be called out for use in the design. See sample table below.

Sample Table for the End-of-Wall Members — Asymmetrical Layout

Level	Chord Post		l_e (in.)	C_f	C_p	Bearing Capacity	Stability Capacity	Demand (kips)	Minimum D/C Ratio
	End	Interior							
3	(1) 2x4	(1) 2x4	91.63	1.15	0.262	6.56	6.82	5	0.73
2	(2) 2x4	(3) 2x4	91.63	1.15	0.262	16.41	17.05	13.5	0.79
1	(2) 2x4	(9) 2x4	115.63	1.15	0.169	36.09	24.24	24	0.99

e. Establish either a symmetrical compression member layout or an asymmetrical layout.

f. For the asymmetrical configuration, as a general rule when using typical platform framing, a maximum of six additional studs (or 9") may be used at the interior studs as compared to the interior stud pack above.

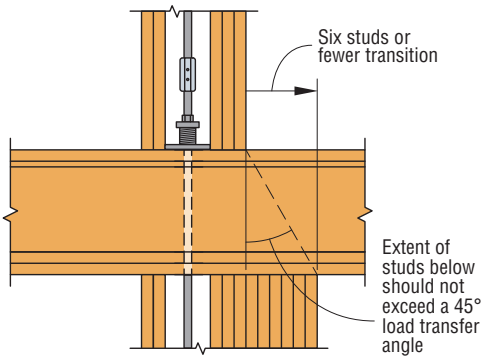

Figure 6

Compression Post Floor-to-Floor Transition

10. In summary, whenever you're designing an anchor tiedown system, it's important to understand the multiple design considerations.

a. Know the difference between cumulative tension and incremental bearing.

b. Estimate the vertical wood shrinkage and coordinate that with the rated travel distance of the specified take-up device.

c. Ensure that rod elongation is being determined using net tensile area of the rod.

d. Know the proper design checks for the steel bearing plate (bearing and bending).

e. Understand the different take-up device options.

f. Ensure that the system deflection is being evaluated per ICC-ES AC316 and do not permit skipping of floors.

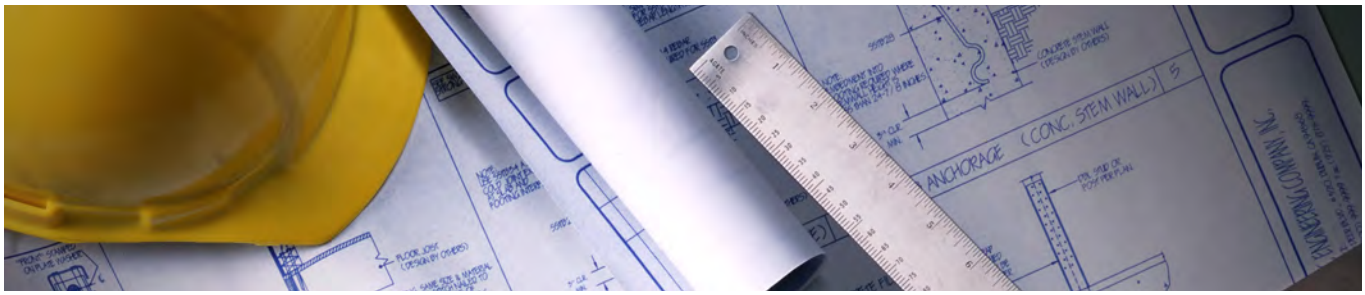

Methods for Specifying

We recognize that specifying the Simpson Strong-Tie Strong-Rod™ Anchor Tiedown System (ATS) for shearwall overturning restraint is unlike choosing any other product we offer. You must first address several design questions and considerations to ensure that the system will be configured to meet the design's intent. For example, when determining whether to use Strong-Rod Systems or conventional holdowns and strapping, a Designer must determine the project's incremental and cumulative loads or specification of elongation and system deflection limits. The Designer will need to determine the compression posts, sheathing thickness and grade, nailing schedule, horizontal drift, and meet all other requirements in accordance with the applicable building code.

For more on these issues and many others, please visit **strongtie.com**. We currently offer the following three methods of specifying:

Your Partner During the Project Design Phase

During the Designer's preparation of the construction documents, Simpson Strong-Tie can be contacted to create the most cost-effective customized runs. These runs include detailed design calculations for each shearwall overturning restraint requirement and design drawings with all the necessary details to install the ATS system. The Design engineer will work closely with Simpson Strong-Tie Engineering Services to provide all the necessary information required to design the system.

Some of the items required by Simpson Strong-Tie to design the ATS system are:

- The design code for the project
- Sill/sole plate species and size
- System elongation limits at each level
- Type of floor system and depth
- Cumulative tension and compression loads at each level
- Wall heights
- Anchor diameter
- Type of run start and termination

Simpson Strong-Tie has provided an easy-to-use spreadsheet to assist the Designer in providing all the necessary information. The spreadsheet can be downloaded at **strongtie.com/srs**. The completed spreadsheet can be emailed to *engineeringservices@strongtie.com*. The completed design calculations, drawings, notes and specifications prepared by Simpson Strong-Tie Engineering Services can then be incorporated into the design documents that the Designer will be submitting to the building official.

Specify Run ID Callouts

The design guide provides Designers with the tools to design their own ATS system by specifying predesigned run IDs. These run IDs can be specified in the Designer's construction documents with associated details. The Designer will be required to determine the overturning tension force required at each level and choose the run ID from the tables, available on our website at **strongtie.com/srs**, based on the number of floors and the necessary capacity.

Handling Deferred Submittals

The Designer may also choose to provide general specifications and loads in the construction documents and require the contractor to submit deferred design calculations and shop drawings. The Designer can download generic specifications and notes to place in the construction documents at **strongtie.com/srs**. Generic details can also be obtained to insert into the Designer's construction documents.

Some of the items required to be included in the Designer's construction document are:

- General Notes for rod system design
- System elongation limits at each level
- Cumulative tension and compression loads at each level
- Anchor diameter
- Details of system run start and termination

Your Partner During the Project Design Phase

Simpson Strong-Tie offers complimentary design services to assist those Specifiers considering the inclusion of the Strong-Rod™ Anchor Tiedown System (ATS) for shearwall overturning restraint. For years, Simpson Strong-Tie has leveraged its testing and overall industry experience to provide world-class, customized design services for Designers of multi-story wood structures.

Why Use Our Engineering Design Services?

- Receive customized shearwall overturning restraint solutions
- Collaborate during the project design phase
- Receive a full set of drawings and calculations to add to your submittal
- Maintain the flexibility to provide the most cost-effective solution for your project
- Gain trusted technical expertise in critical rod tiedown system design considerations

Typical Engagement Process

1. Determine the shearwall layout and establish the shearwall overturning demand loads.
2. Visit **strongtie.com/srs** to download the ATS spreadsheet. Fill out the requested information and email it to *engineeringservices@strongtie.com*. We'll review your submittal and contact you if we have any questions. In a few days, you will receive a complete ATS design package to include with your project submittal. The package will include:
   - Calculations for each unique rod run
   - Elevation drawings for each unique run identifying each component in the rod run
   - Typical detail sheet showing installation details
   - General notes to include in the plans
   - Upon request
     - Compression post design and specification
     - For podium slab anchor reinforcement solution options, visit **strongtie.com/srs** for calculations, load tables and detail options

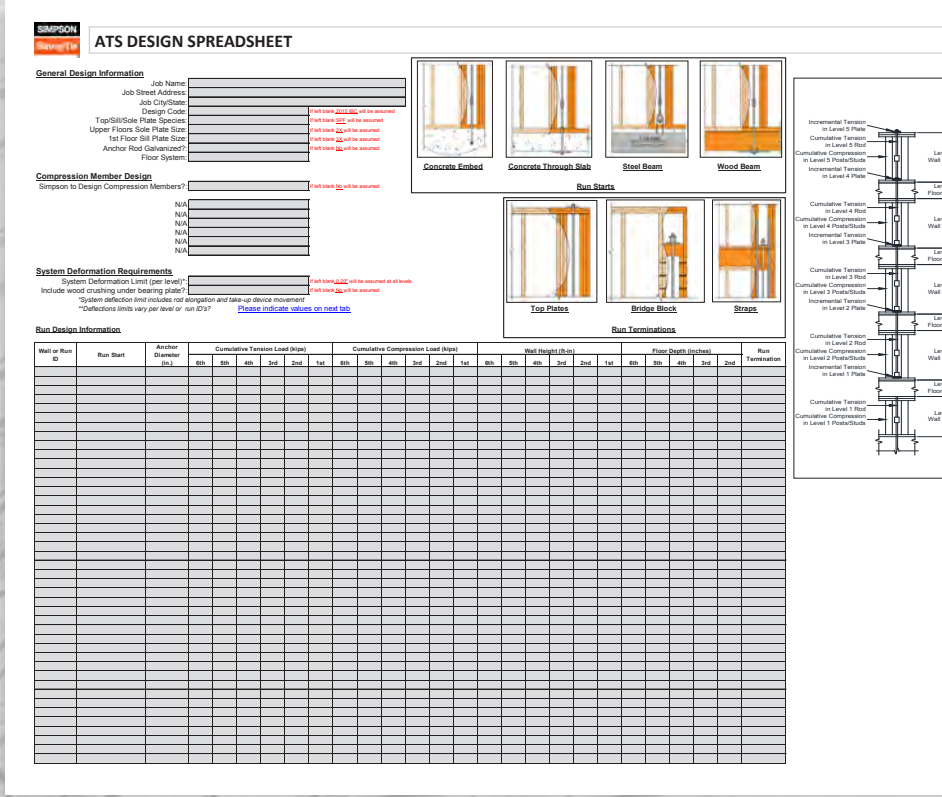

Specify Run ID Callouts

Step 1

Use Run Identification load tables shown at **strongtie.com/srs** to determine the run type based on (a) cumulative tension and (b) incremental bearing. Recommended Run ID will be determined by selecting the highest-capacity run type from any level.

Using the website tables referenced above, compare the run cumulative tension and incremental bearing forces to the forces in the table for each level. Specify the Run ID that corresponds to the highest-capacity run type for any of the levels. See Run ID naming legend below. Contact Simpson Strong-Tie for conditions not covered by the Run ID tables.

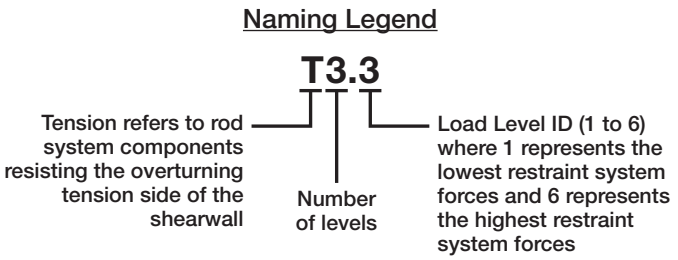

Step 2

Determine the deformation limits required to meet building drift limits.
Specify total deformation Δ_T criteria to be used when designing the rod-system run.

Step 3

a. Determine the required anchor size, material and embedment per applicable codes.

b. For anchorage to foundation, visit **strongtie.com/srs** to select appropriate anchor model.

Step 4

Use the compression member selection tables at **strongtie.com/srs** to select compression members.

Step 5

Specify the solution on the plan. The following is an example of the minimum information required.

- Run ID
- Rod elongation and take-up device displacement < 0.2" between restraints
- Anchor callout — Example: PAB7H or SA1-7H-XXKT
- Compression members as shown in table at **strongtie.com/srs**
- For run termination requirements, see Strong-Rod termination details on pp. 43–44

Handling Deferred Submittals

The following represents some General Notes that should be added to the construction documents in a deferred submittal. A printable PDF version of these notes can be downloaded at **strongtie.com/srs**.

General Notes for Simpson Strong-Tie® Strong-Rod Anchor Tiedown System

1. The continuous rod tiedown system for this project shall be the Simpson Strong-Tie Strong-Rod Anchor Tiedown System (ATS) for shearwall overturning restraint.
2. Simpson Strong-Tie shall provide the ATS to meet the design forces, total vertical displacement limit, and shrinkage requirements as set forth in the structural drawings. ATS calculations and installation details shall be provided to the Designer/Engineer of Record for review and approval.
   a. Allowable rod capacities shall be calculated per American Institute of Steel Construction (AISC) Specification for Structural Steel Buildings.
   b. AISC 360 — 13th Edition for 2006 and 2009 International Building Code
   c. AISC 360 — 14th Edition for 2012 and 2015 International Building Code
3. Bearing plate, wood stud and fastener capacities shall be calculated per the National Design Specification (NDS) for Wood Construction.
   a. NDS — 05 for 2006 and 2009 International Building Code
   b. NDS — 12 for 2012 International Building Code
   c. NDS — 15 for 2015 International Building Code
4. Shrinkage compensating devices shall be provided at each restraint location and account for the shrinkage amount at each story as set forth on the structural drawings.
5. The total vertical displacement between restraint locations, including steel rod elongation and shrinkage compensating device deflection, shall be less than 0.20 inches or as set forth in the structural drawings, using allowable stress design (ASD). Steel rod elongation shall be computed as the product PL/AE, where P is the axial load (lb.), L is the initial rod length between restraint locations at the story under consideration (inches), E is 29,000,000 (psi) and A is the net tensile area of the rod (in.^{2}). Shrinkage compensating device deflection shall be as specified in ICC-ES ESR-2320 including $\Delta_R + \Delta_A (P_D/P_A)$.
6. The ATS shall be restrained by a bearing plate and nut at each story of the multi-story shearwalls. **Note:** Skipping stories, where bearing plates are omitted at intermediate floors that result in multiple stories being tied together, is prohibited.
7. Do not weld products unless the ATS installation details specifically identify a product as acceptable for welding. Some steels have poor weldability and a tendency to crack when welded. Rods, nuts, and coupler nuts shall not be welded.
8. In the event of a discrepancy between the structural drawings and the ATS installation details, the structural drawings shall govern.
9. The structural drawings are specific to the Simpson Strong-Tie Strong-Rod Anchor Tiedown System (ATS) and are not applicable to other manufacturers' continuous rod tiedown systems. Proposed substitutions of other manufacturers' continuous rod tiedown systems shall be submitted to the Designer/Engineer of Record for review and approval at the contractor's expense. Submittal shall include evaluation reports indicating compliance with governing building codes and test data performed in accordance with ICC-ES Acceptance Criteria for Shrinkage Compensating Devices (AC316). In addition, submittal shall include installation details and instructions, calculations in accordance with the governing building codes, and certification by the manufacturer of compliance with these ATS specifications and the structural drawings.
10. ATS run start/terminations shall be as set forth on the structural drawings. Alternate run start/terminations shall be submitted to the Designer/Engineer of Record for review and approval prior to placement of the concrete and at the contractor's expense. Submittal shall include calculations in compliance with the governing building code, including concrete anchorage in accordance with ACI 318 provisions for Strength Design and conversion to ASD load levels.
11. The ATS is designed to be installed floor by floor as the structure is built. Installation in this manner, with shearwalls, will provide a lateral-force-resisting system during construction. The design and expense of alternative methods of temporary-lateral-force resisting systems are the responsibility of the contractor.
12. A pre-construction meeting is recommended with Simpson Strong-Tie prior to placement of the concrete. The purpose of this meeting is to assist in verifying quantities and understanding the installation process. To coordinate this meeting, call Simpson Strong-Tie at (800) 999-5099.

Strong-Rod™ ATS System Details

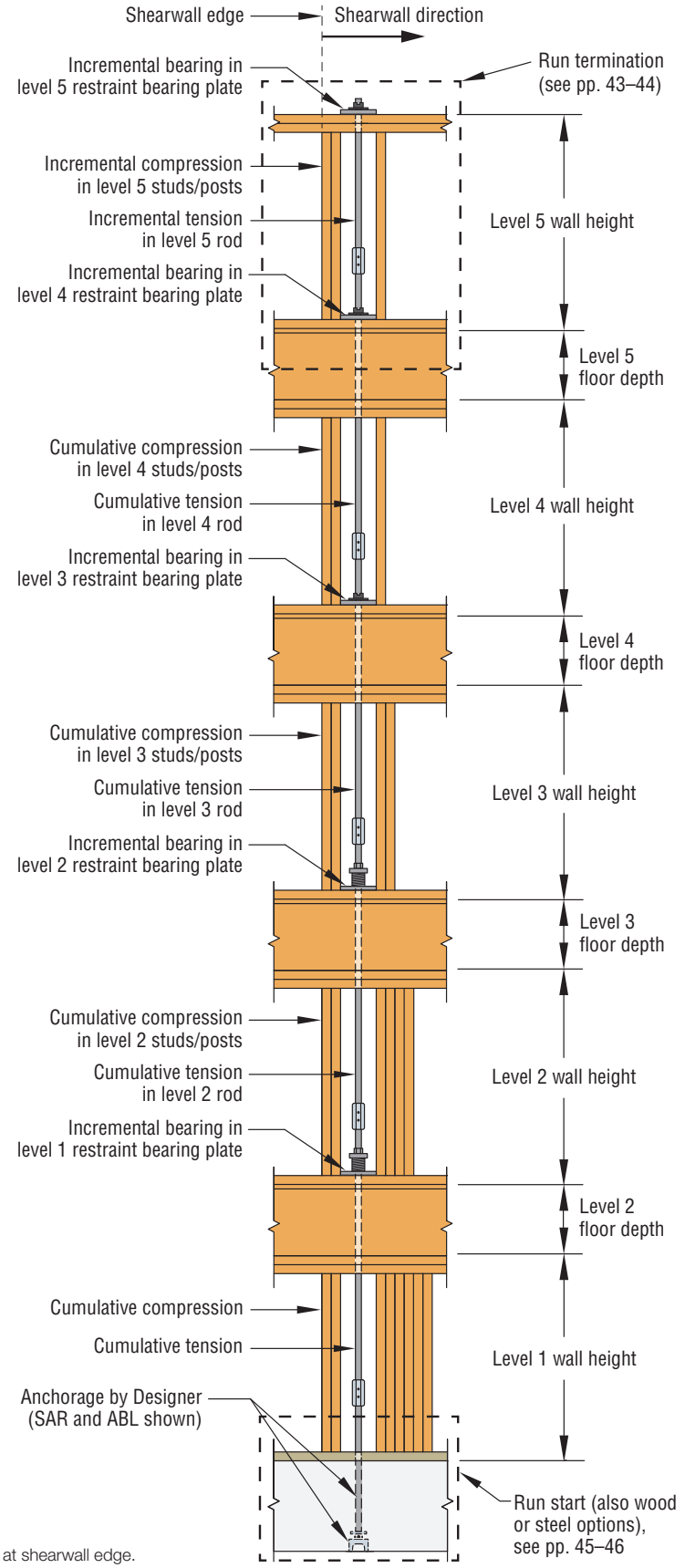

Note: Third stud may be required at shearwall edge.

Top-Story Termination Types

Three top-story run termination options are provided to tailor the solution to the project's specific needs. The option chosen will depend on construction preference or structure conditions, such as sloped top plates, truss/rafter locations that may conflict with top-plate termination and available space above top plates for the take-up device assembly. The bridge block or strap termination are often necessary or preferred when the run stops below the top plate.

With the design support services we offer, Simpson Strong-Tie will also verify each specified run application and recommend the best termination method for the given project. Consider these variables when specifying run terminations.

Bridge Block Connection

The bridge block connection is an alternative to terminating the rod-run on the uppermost floor top plate. The bridge block detail accommodates high loads with installation from the inside of the structure. The bridge block allows the installer to tie off the rod run without working from a ladder. There is no need to worry about having enough room in the roof space to allow for accumulated shrinkage. The bridge block should not be nailed to the full-height studs or the sheathing. One 16d toe nail to each jack stud is all that is required. Check the structural plans for the required fasteners from the jack to the full-height stud below the bridge block.

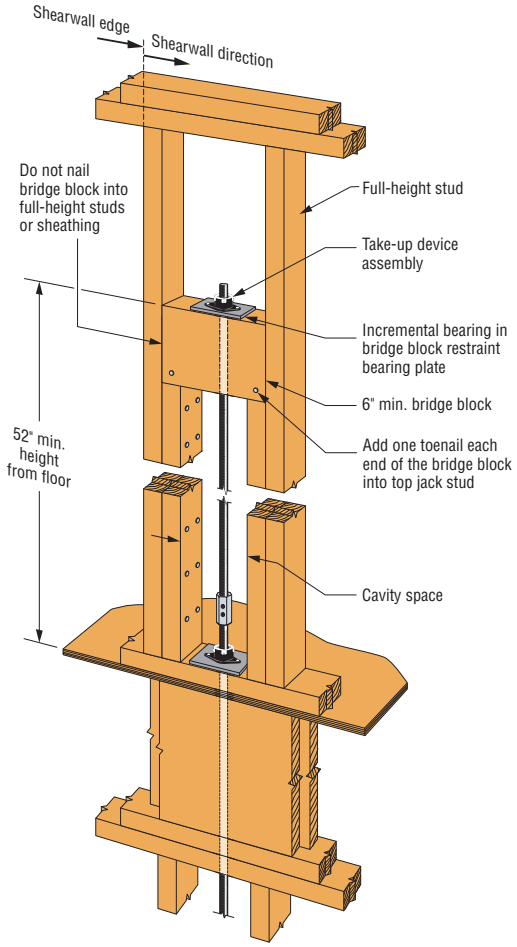

Bridge Block Detail Example

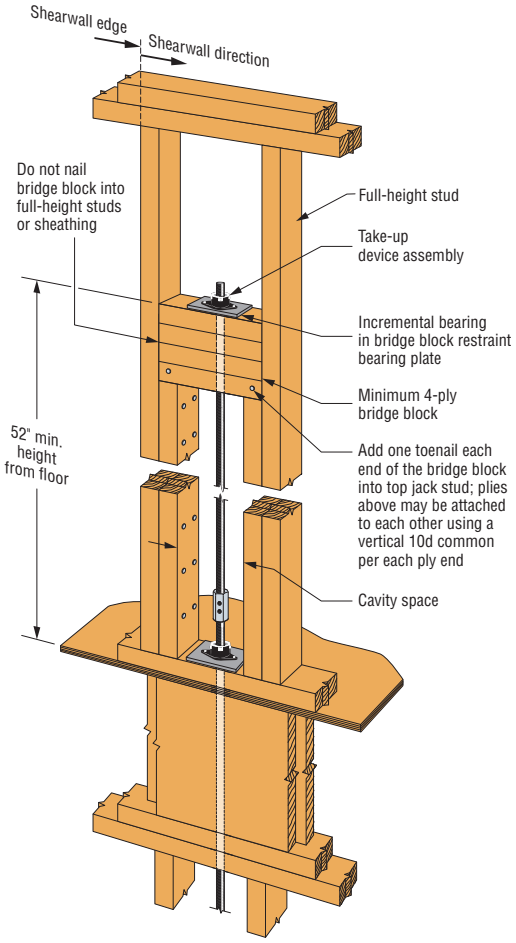

Multi-Ply Bridge Block Detail Example

Top-Story Termination Types (cont.)

Top-Plate Termination

The traditional termination is at the top plate where there is enough roof space and the loads are not high enough to require a bridge block termination.

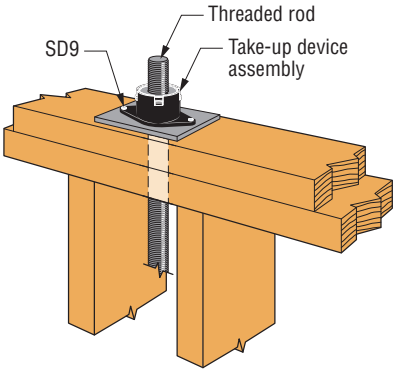

Top Plate Detail Example

Strap Detail Termination

Straps can be used where loads are lower and framing conditions don't require a bridge block or top-plate termination.

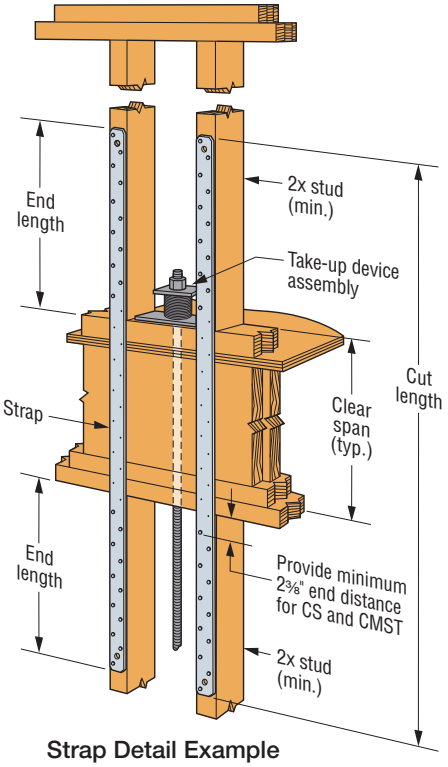

Strap Detail Example

Rod-to-Steel-Beam Connector (ATS-SBC)

The new rod-to-steel-beam connector (ATS-SBC) features a preattached high-strength steel threaded rod and weldable plate for use on projects where the run is to be anchored to steel beams. The new connector reduces the number of components from seven to two, saving contractors installation time and cost. The design of the steel beam and the stiffeners are the responsibility of the Designer.

Material: Plate — ASTM A572 Grade 50

Threaded Rod: High-Strength (ATS-HSR):
Up to 1" diameter — ASTM A449
Greater than 1" diameter — ASTM A193 B7 or F1554 Grade 105

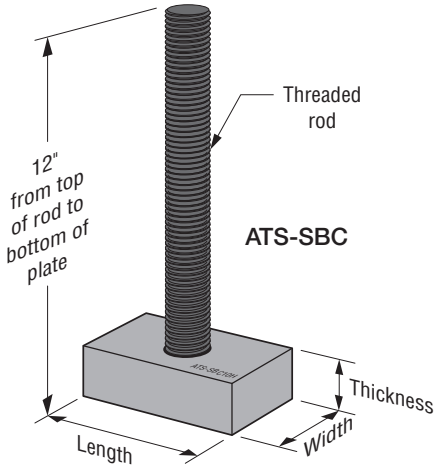

Rod-to-Steel-Beam Connector (SBC)

Model No.	Rod Diameter (in.)[3, 4]	Rod Height (in.)	Rod-to-Beam Plate Size (in.)			Fillet Weld Size (in.)	Total Weld Length (in.)[2]	Allowable Tension Load (lb.)[1, 5]
			Width	Length	Thickness			
ATS-SBC5H	⅝	12 (top of rod to bottom of plate)	3	3	¾	¼	5	13,805
ATS-SBC6H	¾			3	1	5/16	5	19,880
ATS-SBC8H	1			3	1¼	5/16	10	35,345
ATS-SBC10H	1¼			5	1½	5/16	14	57,525
ATS-SBC11H	1⅜			6	1½	5/16	16	69,605
ATS-SBC12H	1½			7	1¾	5/16	18	82,835

1. Allowable loads are for ATS-SBC only. No further increase in allowable load is permitted.
2. The weld length for the ATS-SBC5H and ATS-SBC6H requires only two opposing sides of the plate to be fillet welded full length less a ¼" holdback from each of the edges. For the ATS-SBC8H up to the ATS-SBC12H, all four sides must be fillet welded full length less a ¼" holdback from each of the edges. All fillet welds, F_{EXX}, to be greater than or equal to 70 ksi and to follow geometry and standards per AISC and AWS. Prepare base materials in accordance with AWS D1.1.
3. For purposes of coupling on to the rod above, the ATS-SBC threaded rod specification is UNC Class 2A, in accordance with ANSE/ASME B1.1.
4. The minimum tensile strength, F_u, of the threaded rod for the ATS-SBC5H, ATS-SBC6H and ATS-SBC8H is 120 ksi, and for the ATS-SBC10H, ATS-SBC11H and ATS-SBC12H it is 125 ksi. For rod steel ASTM specifications, see reference above.
5. A minimum flange thickness of 0.258" is required for the structural steel beam.

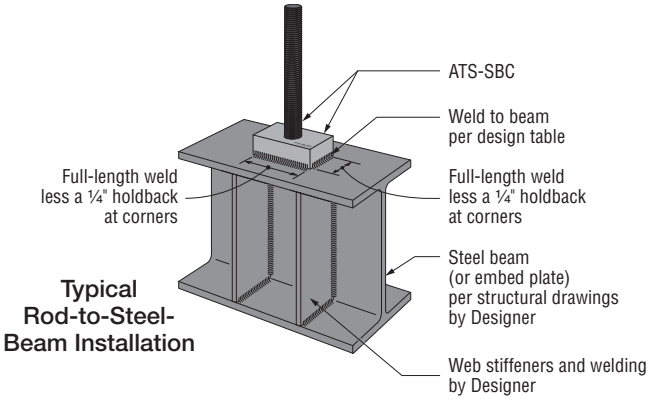

Typical Rod-to-Steel-Beam Installation

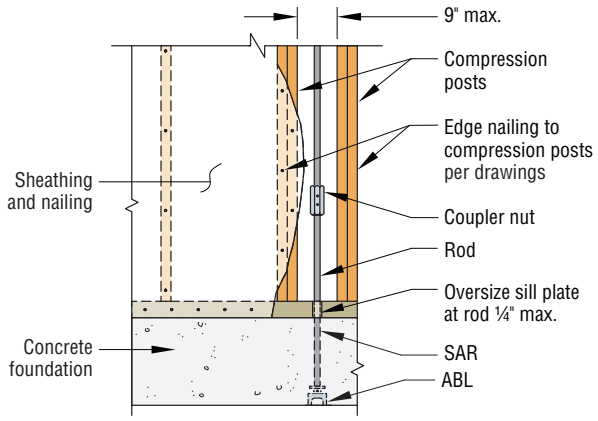

Concrete Detail

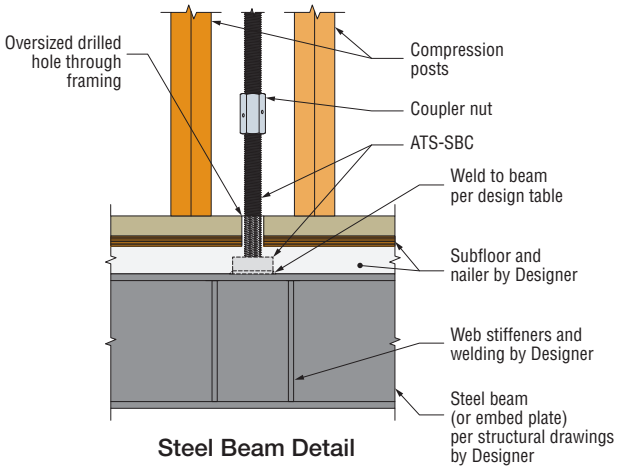

Steel Beam Detail

Wood-Beam Plate (WBP)

The WBP wood-beam plate is for projects where the rod run attaches to wood beams. The center hole of the bearing plate has internal threads to receive the threaded rod from above, and the plate spreads the load across the underside of the wood beam. Two SDS Heavy-Duty Connector screws (provided with the kit) are to be installed through the WBP fastener holes and into the wood beam to support the weight of the bearing plate and rod above. This eliminates the need for an additional smaller bearing plate and nut on the top side of the beam. This unique connection also provides a fixed point at the very bottom of the rod run, allowing the take-up devices above to address shrinkage of all the wood framing including any from the wood beam itself. The heavy hex nut provided with the WBP is required to fully engage the tensile capacity of the rod above.

Material: ASTM A36

Finish: Gray primer

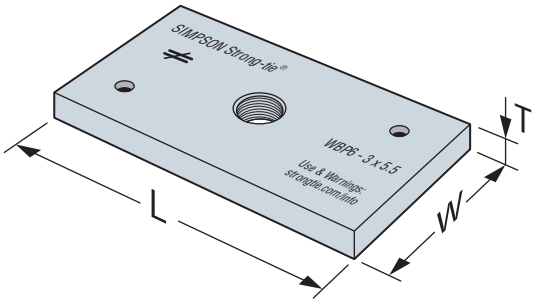

Wood-Beam Plate

Wood-Beam Plate (WBP)

Model No.	Plate Dimensions			Compatible Rod Diameter (in.)[2,4]	SDS Screw Length (in.)[3]	Allowable Bearing Loads (lb.)[1,4,5]				
	W	L	T			DF	SP	HF	SPF	SCL[6]
	(in.)	(in.)	(in.)							
WBP4-3X3.5	3	3½	½	½	3	6,885	6,225	4,460	4,680	8,260
WBP5-3X3.5	3	3½	½	⅝	3	6,775	6,125	4,390	4,605	8,130
WBP6-3X5.5	3	5½	½	¾	3	9,955	9,375	6,750	7,085	11,100
WBP7-3X8.5	3	8½	⅞	⅞	4½	15,245	13,785	9,880	10,370	17,335
WBP8-3X12	3	12	1¼	1	4½	21,665	19,585	14,040	14,730	23,975
WPB8-3X15	3	15	1⅝	1	4½	27,290	24,670	17,685	18,555	30,375
WBP8-5X5.5	5	5½	½	1	4½	17,465	15,790	11,320	11,875	20,130
WBP9-5X8.5	5	8½	⅞	1⅛	4½	25,565	23,110	16,565	17,385	30,480
WBP9-5X12	5	12	1¼	1⅛	4½	36,505	33,000	23,655	24,820	41,140
WBP10-5X12	5	12	1¼	1¼	4½	36,325	32,840	23,540	24,700	41,630

1. No further increase in allowable load is permitted. For installation, thread rod through WBP plate, then thread the provided heavy hex nut to the threaded rod. Table loads are based on the rod threading through the plate and attaching to the heavy hex nut with a recommended one thread showing past the heavy hex nut. Heavy hex nut to be snug tight.
2. SDS screws are needed to fasten the rod and WBP assembly to the wood beam (SDS screws provided).
3. Center hole is a UNC-2B tapped hole.
4. The following design value adjustment factors ($F_{c\perp}$) were used for compression perpendicular to grain in accordance with the 2015 NDS for dimensional lumber: DF = 625 psi, SP = 565 psi, HF = 405 psi and SPF = 425 psi.
5. For structural composite lumber (SCL), manufacturers' specifications were referenced and a minimum design value adjustment factor ($F_{c\perp}$) of 750 psi was used. For $F_{c\perp}$ values when specifiying SCL other than this, a linear adjustment may be applied. Designer to account for drilled hole in beam where occurs.

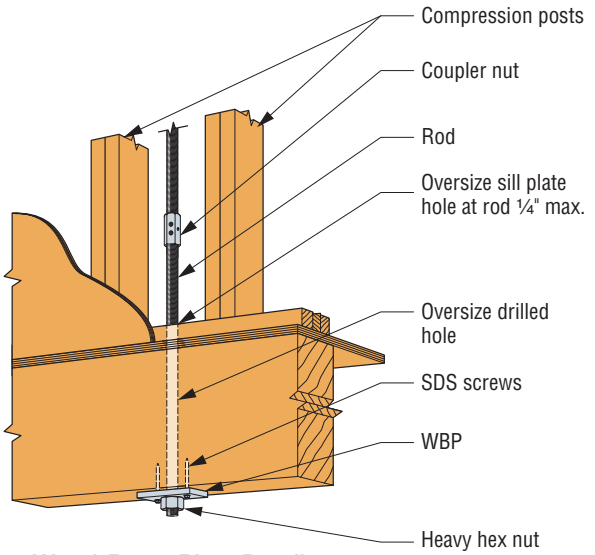

Wood-Beam Plate Detail

Strong-Rod™ ATS Run Details

Our Anchor Tiedown System (ATS) for shearwall overturning restraint addresses many of the design challenges specifically associated with multi-story buildings that must withstand seismic and high wind activity. For your project, you will want to implement drawing details that will assist you during design and construction. In addition to the run start and run termination details shown on pp. 42–46, Simpson Strong-Tie offers general details that can be found at **strongtie.com/srs** as well as our general detail sheets that are provided with our complete ATS design package. Below are two common run details; the rod offset detail and the mid-floor blocking detail.

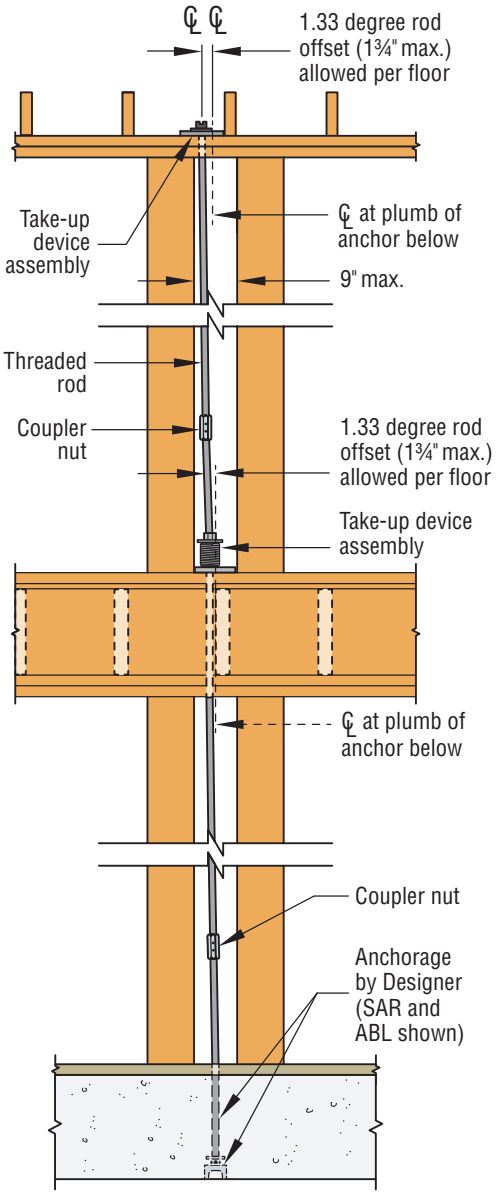

Rod Offset Detail

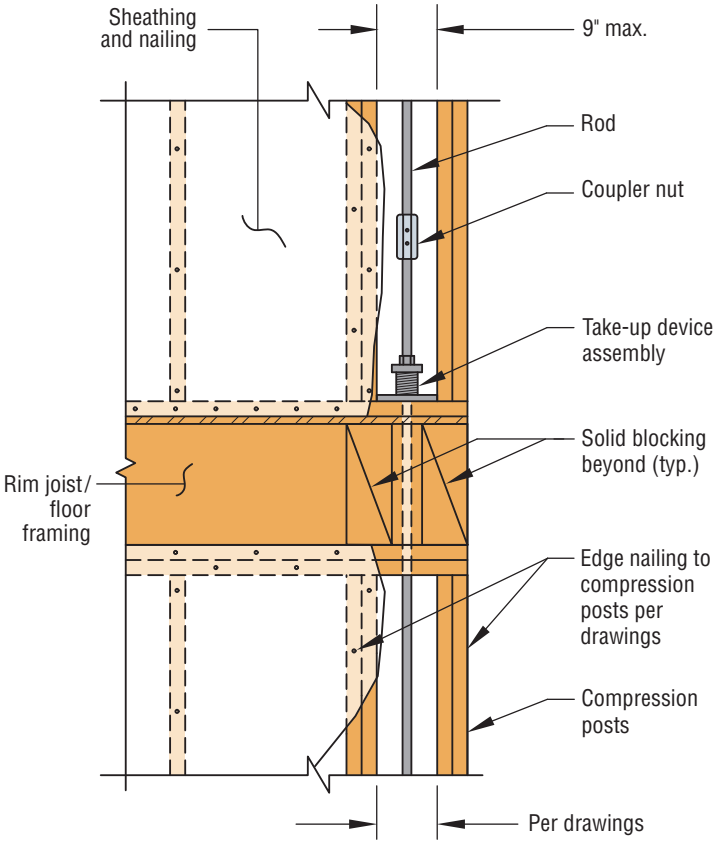

Mid Floor Detail

Strong-Rod™ URS
Uplift Restraint System for Roofs

The Simpson Strong-Tie® Strong-Rod uplift restraint systems for roofs (Strong-Rod URS) is a continuous rod tiedown solution designed to provide a complete load path to resist uplift (suction) pressure on the roof by transferring these forces through the structure to the resisting elements (typically the foundation).

Strong-Rod™ Uplift Restraint System for Roofs

The Simpson Strong-Tie® Strong-Rod uplift restraint systems for roofs (Strong-Rod URS) is a continuous rod tiedown solution designed to provide a complete load path to resist uplift (suction) pressure on the roof by transferring these forces through the structure to the resisting elements (typically the foundation).

Designing rod systems to resist wind uplift (URS) is very different from designing rod systems used to resist shearwall overturning caused by lateral wind pressure or seismic forces (ATS) (see pp. 12–47). This is due to where each type of force originates in a building. For wind uplift, this is only at the roof and can be reduced by dead load at each level of the building. Lateral forces are applied at each level (each horizontal diaphragm, both roof and floor) of the building, and increase at each lower level as load from the level above is added to the level below.

Forces Resisted by URS

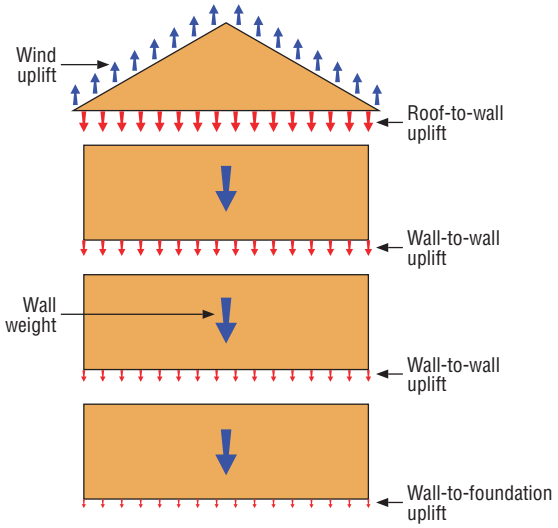

- Uniform load applied to roof
- Load reduces when transferred down to foundation due to self weight of structure
- Connections uniformly spaced

Forces Resisted by ATS

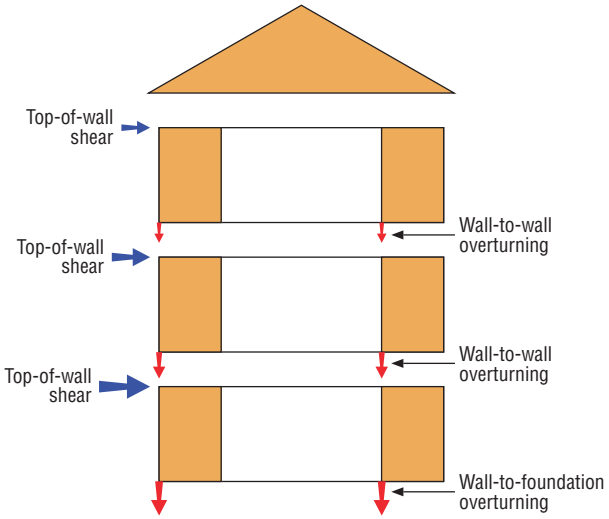

- Shear load applied at each level
- Load increases when transferred down to foundation
- Connections must be at both ends of shear walls to resist point loads

This section of the guide will illustrate the design methods for creating the load path using a rod system to resist wind uplift (URS), explain the key design considerations for both the wood structural elements and rod-run components, provide load capacities for components, suggest methods of specification and show typical details to assist in your design.

A Quick History of Wind Uplift Rod Systems

Rod tiedown systems have been used by the light-framed wood construction industry to resist wind uplift forces. Yet codes and standards have not provided detailed guidance for design of these systems. Designers, consequently, have been forced to rely entirely on engineering judgment and/or trust a rod manufacturer's literature or substitution submittals to create this load path.

This lack of guidance sometimes led to rod-restraint spacing based on rod tension and bearing plate capacities alone. This design neglects the wood components of the system and may lead to rods spaced too far apart, compromising the continuous load path, causing building damage and creating life-safety issues.

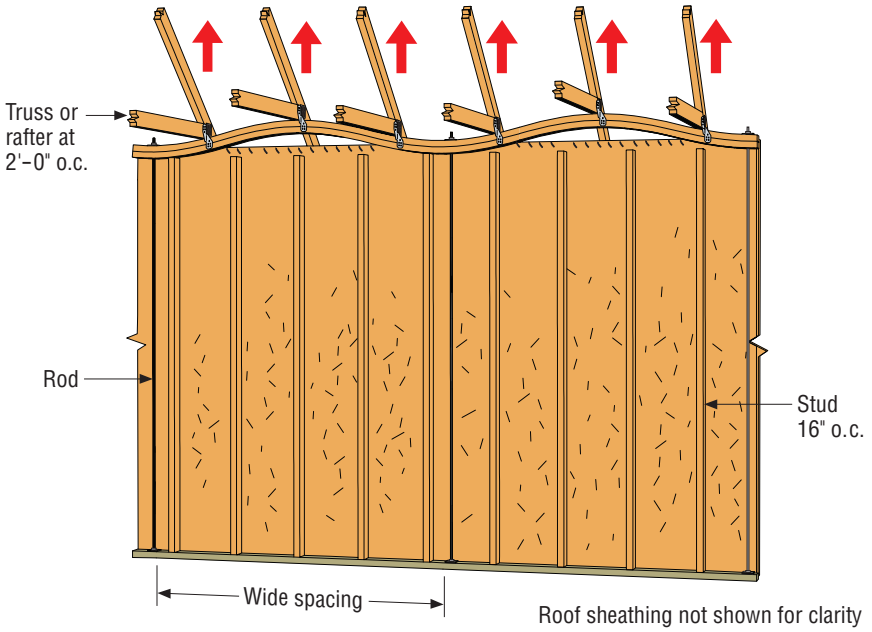

Figure 1 — Excessive Spacing of Rod Restraints to Resist Uplift Forces Causing Top Plate Failure

Industry Guidance

In June 2010, ICC-ES passed and made effective Acceptance Criteria 391 after multiple public hearings that garnered engineer, manufacturer, building official and other third-party input. AC391 established guidelines for the evaluation of either:

- The steel components making up continuous rod tiedown runs (CRTR) only. If a manufacturer has a CRTR report, the Designer of Record must take the time to evaluate how the light-framed wood members will transfer forces to the CRTR.
- The entire continuous rod tiedown system (CRTS), which includes CRTR and the light-framed wood structure used to resist wind uplift. If a manufacturer has a CRTS report, this saves the Designer of Record time.

These same guidelines in AC391 can be used by project designers themselves to lay out continuous rod tie-down systems to resist wind uplift.

Following the key design considerations, an effective uplift rod system is designed and detailed to:

- Efficiently transfer wind uplift loads from wood components to steel components of the rod runs
- Keep wood top plate bending within acceptable limits
- Control wood top plate rotation
- Limit steel rod elongation
- Restrict crushing of wood top plate under bearing plates
- Address deflection caused by wood shrinkage

From the Roof to the Foundation

Strong-Rod Uplift Restraint System Components

Key Design Considerations from ICC-ES Acceptance Criteria AC391 are included through each load path connection on the following pages.

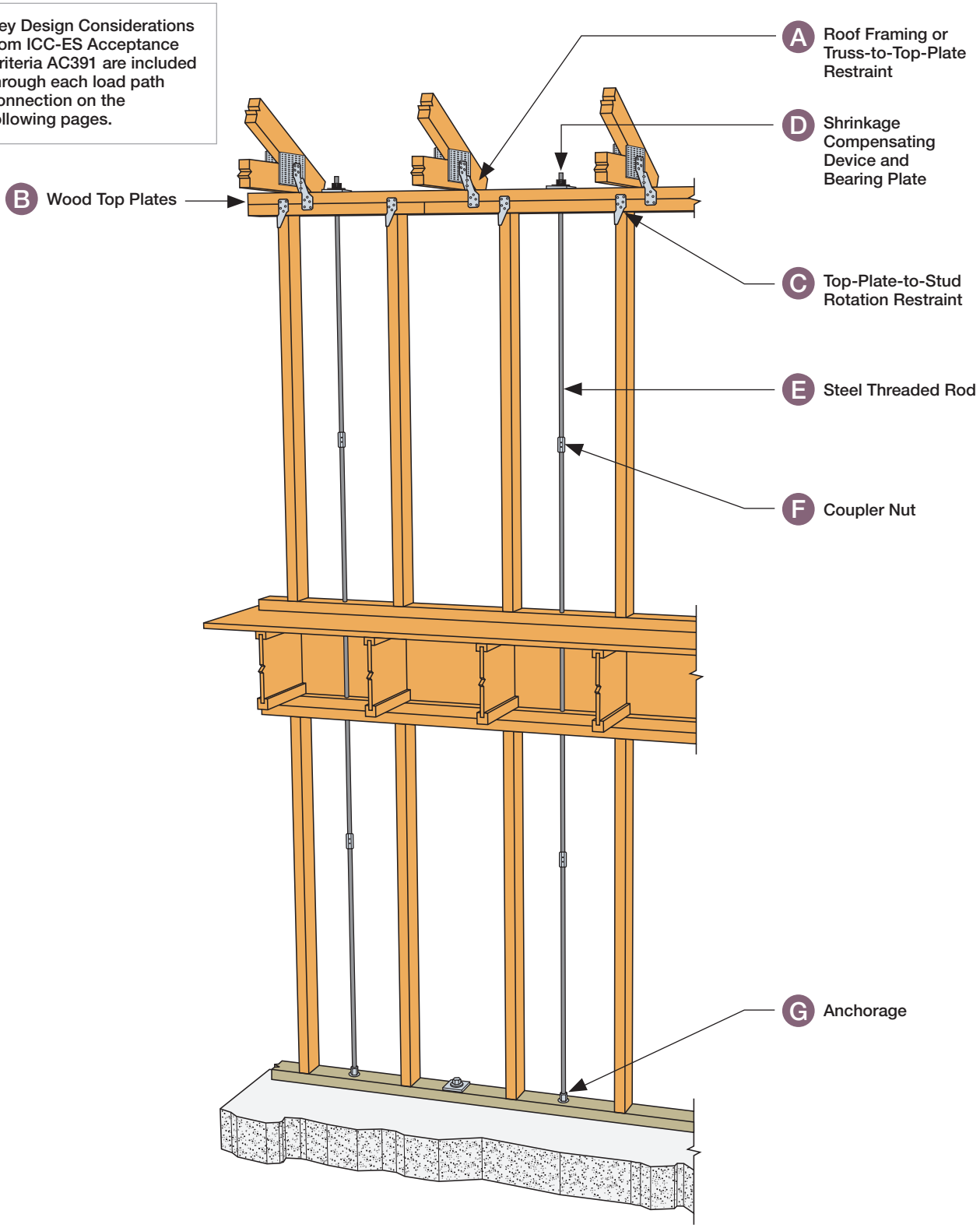

A Roof Framing or Truss-to-Top-Plate Restraint

Uplift refers to the forces that can lift a structure. The forces are generated when high winds blow over the top of the structure, creating suction that can lift the roof. These uplift forces must be transferred down to the foundation to prevent damage. Several connections are required to create a continuous load path, starting with a hurricane tie or structural fastener connecting the roof framing to the top plates.

For additional information, the Simpson Strong-Tie® *High Wind–Resistant Construction Application Guide* (F-C-HWRCAG) offers a variety of options to resist roof uplift forces.

High Wind–Resistant Construction Application Guide (F-C-HWRCAG)

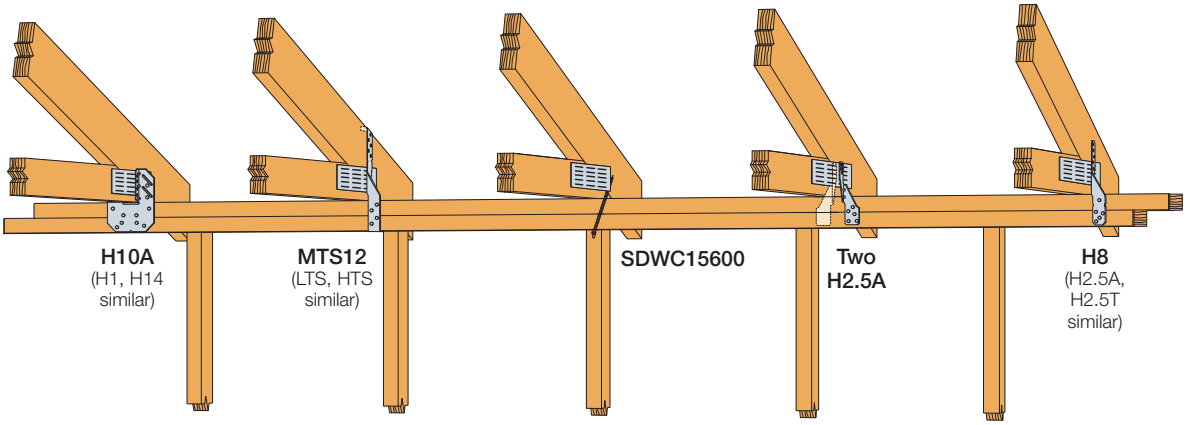

Blocking and stud to plate connector not shown for clarity

AC391 Criteria Section	AC391 Requirement
1.2.1.1	• Use of continuous rod tiedown runs (CRTR) and continuous rod tiedown systems (CRTS) is limited to resisting roof wind uplift in light-frame wood construction. • Specifically excluded from AC391 is the use of CRTR to resist shearwall overturning forces or use in cold-formed steel framing.

B Wood Top Plates

In addition to distributing the gravity loads from the roof to the studs below, the top plates in a light-frame wood structure are also the drag struts between shearwalls and the chords of the diaphragms. This means that these elements are already stressed in shear perpendicular to grain as well as tension parallel to grain. After hurricane ties transfer roof uplift forces into the top plates, the load path dictates that these wood top plates transfer uplift forces by bending along the weak axis to each rod run restraint. The Designer needs to specify the on-center spacing of the rod runs with multiple design considerations in mind.

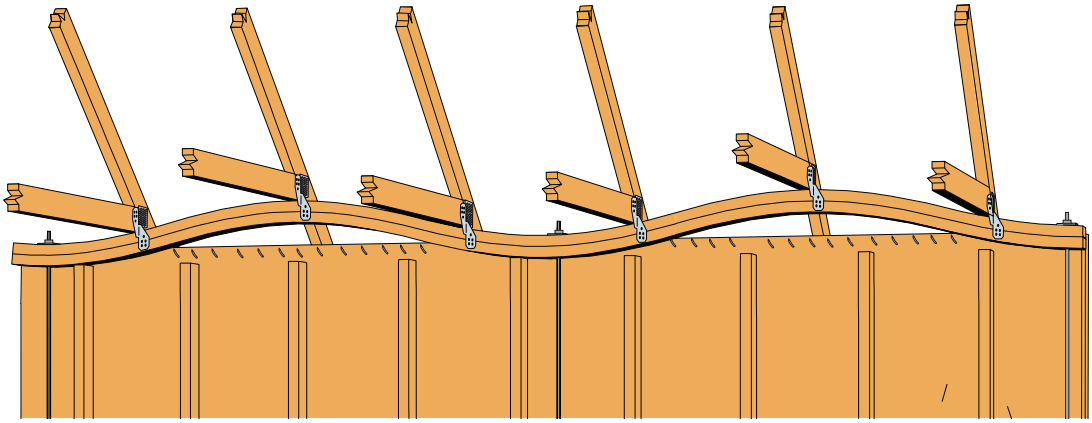

Top-Plate Bending Due to Uplift

AC391 Criteria Section	AC391 Requirement
3.2.2	CRTS allowable loads shall be evaluated and be limited by • Wood deflection limitations per 3.2.2.2, or • Flexural (bending) stress per 3.2.2.1, or • Shear stress perpendicular to grain per 3.2.2.4, or • Combined axial (chord/drag force) and flexural (bending) stresses per 3.2.2.5
3.2.2.2	The deflection of the top plates in bending occurring between CRTR is limited to L/240, where L is the length of the top plates between tiedown runs. Additionally, the sum of the rod elongation, top plate crushing under bearing plates, deflection of any take-up devices and the deflection of the top plates between tiedown runs shall not exceed 0.25 inches at the applied (ASD) load.

Top-Plate Bending Due to Uplift

Failure at Top-Plate Splice

B Wood Top Plates (cont.)

Top-Plate Splice Bending Reinforcement

When wind uplift restraint systems are installed in accordance with ICC-ES ESR-1161 and the Designer wants to use the bending capacity of both top plates and not just one, top-plate splice reinforcement must be installed at all locations in which there is a discontinuity in one of the top plate members, such as the top plate splice. This is to reinforce the top plate in bending. The splice reinforcement must be attached using Simpson Strong-Tie® ¼" x 4½" Strong-Drive® SDS Heavy-Duty Connector screws. For top-plate splices that are approximately centered between two adjacent studs in the wall below, reinforcement must be installed as depicted in Figure 1 below. For top-plate splices that are not centered between two adjacent studs in the wall below, reinforcement must be installed as shown in Figure 2 below as well.

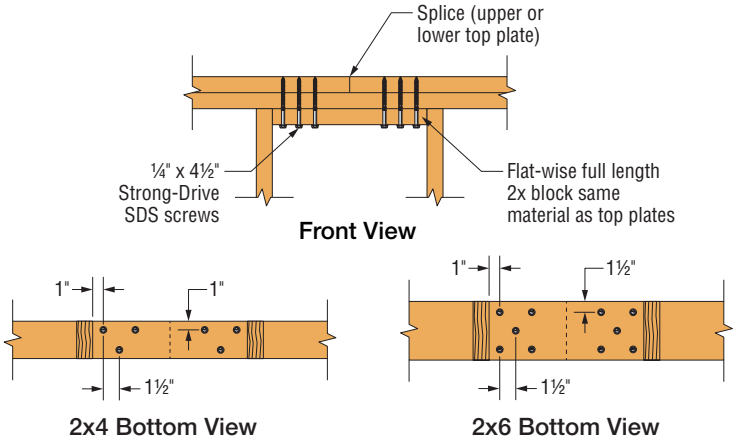

Figure 1 — Top-Plate Splice: Reinforcement (Splice Between Studs)

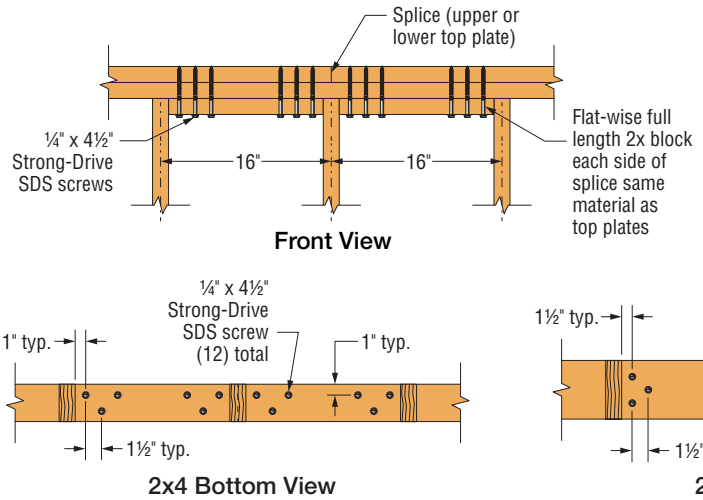

Figure 2 — Top-Plate Splice: Bending Reinforcement (Splice Centered Over Studs)

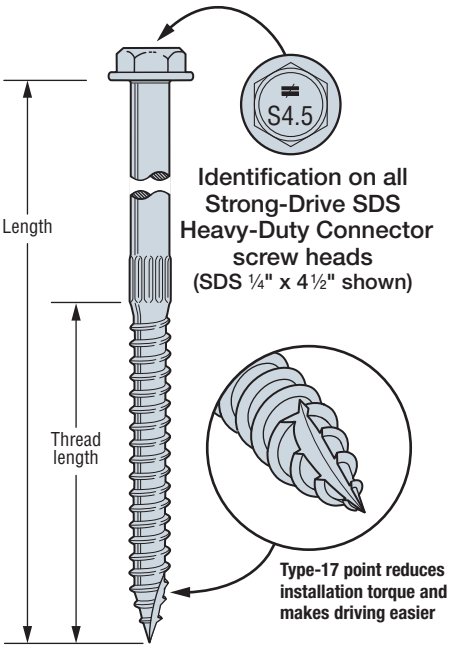

Strong-Drive ¼" x 4½" SDS Heavy-Duty Connector Screw
U.S. Patent 9,523,383

AC391 Criteria Section	AC391 Requirement
3.2.2.1	Approved top plate splice details must be provided for the CRTS to utilize both top plates in bending, otherwise only the capacity of a single top plate may be used.

C Top-Plate-to-Stud Rotation Restraint

The roof-structure-to-top-plate connection induces eccentric loads to the top plate. This will require a top-plate-to-stud connection to continue the load path and prevent torsional rotation of the top plates. Simpson Strong-Tie offers a variety of product options to resist the rotational forces from the roof structure.

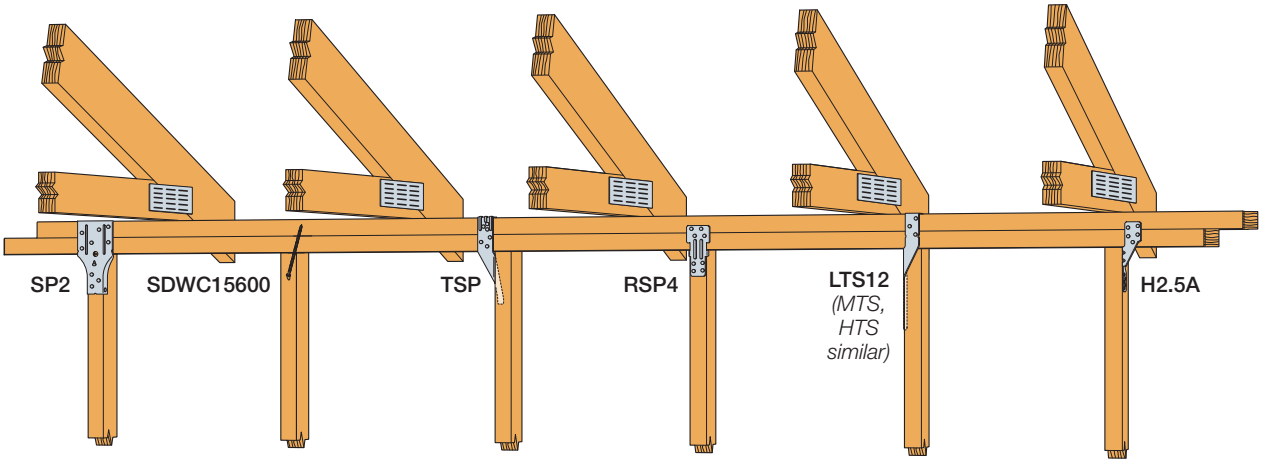

Truss-to-plate connections not shown for clarity. However, they need to be installed on the same side of the wall as plate-to-stud connectors.

AC391 Criteria Section	AC391 Requirement
3.2.2.3	Top-plate torsion (rotation) must be prevented due to offsets between the point of load application, such as hurricane ties at the sides of the top plates and load resistance (rods at the center of the top plate for example). This can be accomplished by providing a positive connection from the top plate to stud on the same side of the wall as the roof framing to wall connection.

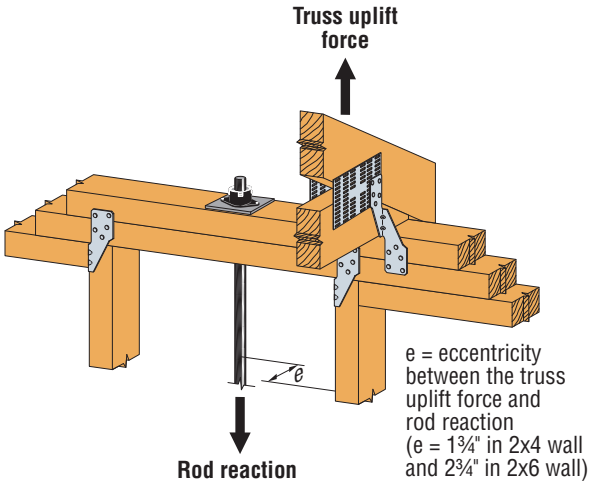

Stud-to-Plate Tie Reaction

Top-Plate Rotation Failure Due to Uplift

Ultimate Failure of Top Plate in Pure Bending Due to Rotation Restraint

C Top-Plate-to-Stud Rotation Restraint (cont.)

When connection hardware between the roof framing members and the wall top plate induces eccentric loading about the centerline of the top plate, Simpson Strong-Tie® top-plate-to-stud connectors are the optimum installation solution to prevent top-plate rotation as shown in illustration below. The top-plate-to-stud connectors must be installed on the same side of the top plate as the roof-to-wall connectors. Connector models must be selected and installed in a manner that does not induce significant tension stresses perpendicular to the grain of the wood top-plate members.

Required Top Plate Rotation Restraint Connection Force[1]

Roof Uplift (plf)	Required Connector Capacity (lb.)		
	Connection Spacing		
	16"	24"	32"
100	67	100	133
150	100	150	200
200	133	200	267
300	200	300	400
400	267	400	533
500	333	500	667
600	400	600	800

For SI:1 inch = 25.4mm

1. The top plate-to-stud connection used to restrain top plate rotation must be installed on the same side of the wall as the roof-to-top plate connection.

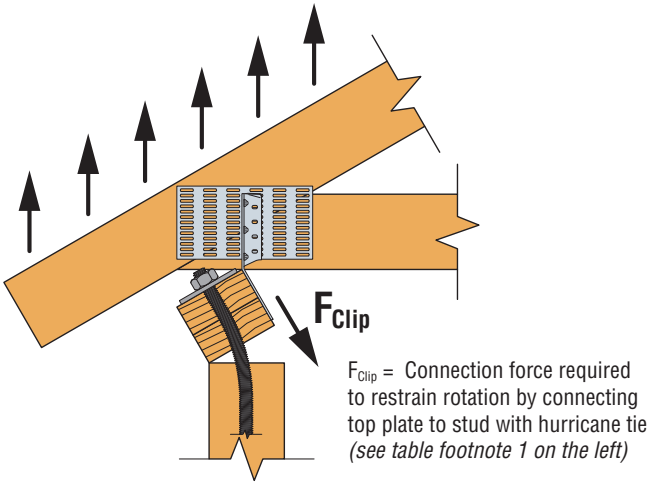

Top-Plate Rotation Restraint Connection Force

For hurricane tie components that can connect top plates to studs to resist rotation refer to the *High Wind–Resistant Construction Application Guide* (F-C-HWRCAG) or pp. 324–325 of the *Wood Construction Connectors* catalog.

High Wind–Resistant Construction Application Guide (F-C-HWRCAG)

D Shrinkage Compensating Device and Bearing Plate

RTUD Ratcheting Take-Up Device

The RTUD ratcheting take-up device is a cost-effective shrinkage compensation solution for continuous rod systems. The RTUD is threaded rod diameter specific and allows for unlimited shrinkage. The RTUD should be hand installed until the base of the device fully bears on top of the BPRTUD. Once the fastener holes are aligned and the RTUD is flush, install the Strong-Drive® fasteners. Once the RTUD is installed, a series of internal threaded wedges enable the device to ratchet down the rod as the wood structure shrinks, but engage the rod in the reverse direction when under tensile loading. Continuous engagement is maintained on the rod at all times by the take-up device, enabling the rod system to perform as designed from the time of installation.

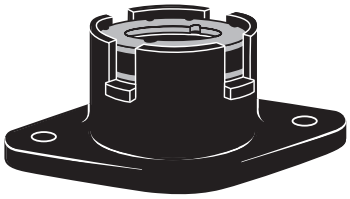

RTUD4B
(RTUD3B, RTUD5 and RTUD6 similar)
U.S. Patent 8,881,478 and Patent Pending

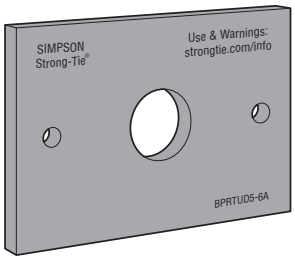

BPRTUD5-6
(BPRTUD3B–4B similar)

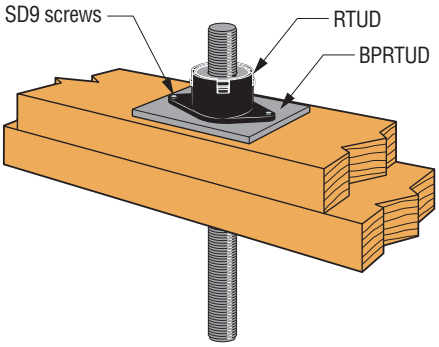

Typical Ratcheting Take-Up Device Assembly Installation

RTUD

Model No.	Threaded Rod Diameter (in.)	Dimensions (in.)			Allowable Load (lb.)	Seating Increment, Δ_R (in.)	Deflection at Allowable Load, Δ_A (in.)	Compatible Bearing Plates
		Length	Width	Height				
RTUD3B	⅜	2¾	1½	1	5,180	0.044	0.010	BPRTUD3-4B
RTUD4B	½	2¾	1½	1	9,210	0.040	0.003	BPRTUD3-4B
RTUD5	⅝	3⅞	2	1⅜	14,495	0.056	0.007	BPRTUD5-6*
RTUD6	¾	3⅞	2	1⅜	20,830	0.057	0.010	BPRTUD5-6*

1. Allowable loads are for RTUD only. The attached components must be designed to resist design loads in accordance with the applicable code.
2. Thread specification for threaded rod used with the RTUD must be UNC Class 2A or Class 1A in accordance with ANSE/ASME B1.1.
3. No further increase in allowable load is permitted.
4. RTUD3B and RTUD4B fasten to the wood plate with the BPRTUD bearing plate and (2) #9 x 1½" or 2½" Strong-Drive SD Connector screws. RTUD5-6 fastens to the wood plate with the BPRTUD bearing plate and (2) #9 x 2½" Strong-Drive SD Connector screws.
5. The specified minimum tensile strength, F_u, of the threaded rod must not exceed 125 ksi for the RTUD3B, RTUD4B, RTUD5 and RTUD6.

** Indicate the compatible BPRTUD5-6 on design plan. Refer to the BPRTUD table on p. 59.*

D Shrinkage Compensating Device and Bearing Plate (cont.)

ATUD Take-Up Device

The ATUD take-up devices are not specific to a single rod diameter but allow up to a maximum rod diameter clearance and then require a diameter-specific nut on top. Once activated, the spring allows the ATUD to expand to keep the bearing plate tight against the wood members as shrinkage occurs.

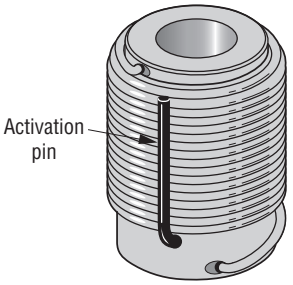

ATUD9

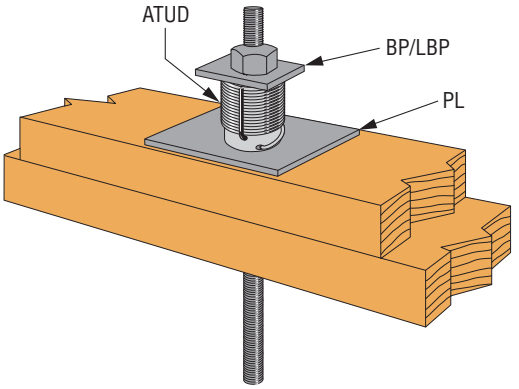

Typical Take-Up Device Assembly Installation

Naming Legend

ATUD6-2

- ATUD: Aluminum Take-Up Device
- 6: Maximum Rod Clearance in ⅛" Increments (Ex: 6 = ⅝" or ¾")
- 2: Rated Shrinkage Compensation Capacity

ATUD

Model No.	Threaded Rod Diameter (in.)	Dimensions (in.)		Rated Compensation Capacity (in.)	Allowable Load (lb.)[1,2]	Seating Increment, Δ_R (in.)[3]	Deflection at Allowable Load, Δ_A (in.)[3]	Bearing Plate Above ATUD	Bearing Plate Below ATUD
		Width	Length						
ATUD6-2	¾	1¾	3⅛	2	11,430	0.004	0.022	BP	PL5/PL6
ATUD9	1⅛	2⅛	2¼	1	15,560	0.002	0.013	BP	PL9

1. Allowable compression capacities are for ATUD only and are based on ICC-ES ESR-2320.
2. No further increase in allowable load is permitted.
3. Total device deflection = $\Delta_T = \Delta_R + \Delta_A(P_D/P_C)$, where P_D = Demand Load; P_C = Allowable Load.

D Shrinkage Compensating Device and Bearing Plate (cont.)

Bearing Plates

Bearing plates must be used to transfer tension load from the building structure to the rods and installed on the top of the wood double top plates.

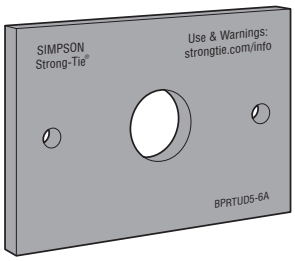

BPRTUD

AC391 Criteria Section	AC391 Requirement
3.1.1, 6.2.1.3, and 6.3.1.3	The effects of wood shrinkage on the overall deflection of the CRTS shall be analyzed by a registered design professional, and a method of addressing wood shrinkage in the system shall be provided. If shrinkage compensating devices are used, they shall meet AC316 requirements. Visit **strongtie.com/software** for more information on the Simpson Strong-Tie® Wood Shrinkage Calculator.
3.2.1.2 and Figure 1	Steel bearing plates shall be sized for proper length, width and thickness based on steel cantilever bending action and wood bearing. Deflection from bearing compression (up to 0.04") must be included in overall deflection calculations.

Separation Between Nut and Bearing Plate Due to Wood Shrinkage

Properly Installed RTUD over BPRTUD Bearing Plate

See pp. 57–58 for take-up device models and capacities.

BPRTUD

Model No.	Length (in.)	Width (in.)	Thickness	Hole Diameter (in.)	Allowable Load (lb.) (160)			
					DF	SP	HF	SPF
BPRTUD3-4B	3½	3	3 ga.	⅝	6,415	5,975	4,475	4,700
BPRTUD5-6A	4½	3	3 ga.	1	7,080	6,575	5,175	5,355
BPRTUD5-6B	5½	3	½ in.	1	10,295	9,305	6,670	7,000
BPRTUD5-6C	7½	3	¾ in.	1	13,385	12,100	8,675	9,105

1. No further increase in allowable load permitted.
2. Bearing plate loads based on the hole below the bearing plate to have a diameter equal to the rod diameter plus ¼". Reduce allowable load per code for larger holes.
3. For bearing plate models associated with ATUD/TUDs, see p. 27.

SIMPSON Strong-Tie®

E Steel Threaded Rod

Strong-Rod threaded rods are the tension transfer element within the Uplift Restraint System.

Fully threaded rod (all-thread rod) is standard-strength material (F_y = 36 ksi, F_u = 58 ksi) and is available in multiple lengths to suit your structure's wall height(s).

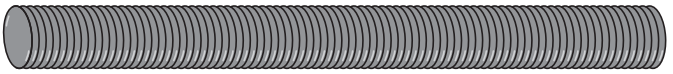

Fully Threaded Rod

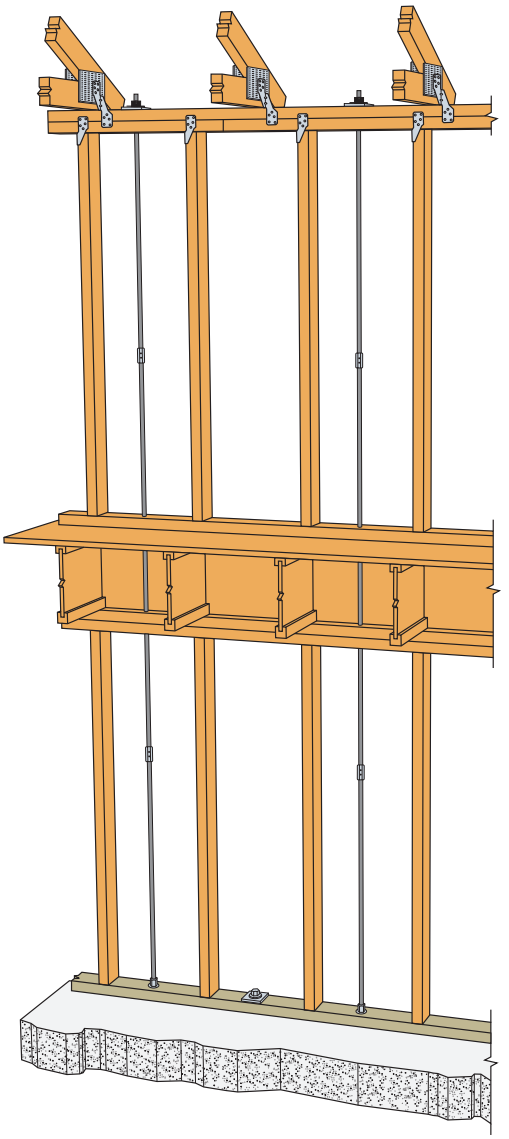

AC391 Criteria Section	AC391 Requirement
3.1.1	CRTS allowable loads shall be evaluated and be limited by • Tiedown run steel component capacities per 3.1.1
3.2.1.1	Rod elongation is limited to 0.18 inches for total rod length at the applied (ASD) load. Visit **strongtie.com/software** to access our Rod Elongation Calculator.

Steel Threaded Rod

URS Fully Threaded Rod Model No.	Rod Dia. (in.)	Gross Area A_{gross} (in.²)	Threads per Inch, n	Net Area A_n (in.²)	F_u (ksi)	Allowable Tension Capacity (lb.)						
						Based on Steel Stresses	Based on 0.18" Elongation Limit for Maximum Rod Length of:					
							15'	25'	35'	45'	55'	65'
ATS-R3	⅜	0.110	16	0.077	58	2,400	2,250	1,350	960	750	610	520
ATS-R4	½	0.196	13	0.142	58	4,270	4,120	2,470	1,760	1,370	1,120	950
ATS-R5	⅝	0.307	11	0.226	58	6,675	6,550	3,930	2,810	2,180	1,790	1,510
ATS-R6	¾	0.442	10	0.334	58	9,610	9,610	5,820	4,160	3,230	2,650	2,240

1. Allowable tension capacities are based on AISC 360-10.
2. No further steel stress increase allowed.
3. Available in 1', 1½', 2', 3' and 6' lengths. Other sizes available as special order items.

F Coupler Nut

CNW coupler nuts are used to connect one threaded rod to another, and to connect to anchor bolts within the Strong-Rod URS. CNW coupler nuts exceed 100% of the tensile capacity and 125% of the yield capacity of the corresponding standard-strength threaded rod. All coupler nuts are lot tested to ensure quality.

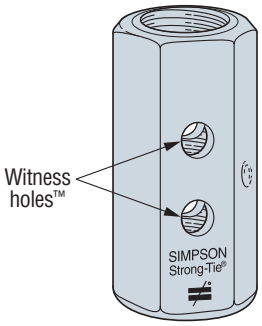

CNW

AC391 Criteria Section	AC391 Requirement
1.4.6 and 3.4.1.1	• Proof of the positive connection between threaded rod and threaded rod couplers shall be provided, such as Witness Holes™ or other method. • Rod couplers must also be tested to prove they can develop at least 100% of the rod's tensile strength and 125% of the rod's yield strength.

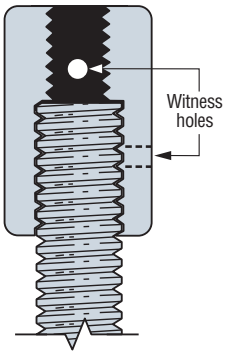

Transition Coupler Nut

Allowable Loads for Coupler Nuts Used in the URS

Model No.	Nominal Rod Diameter (in.)	Height, H Min. (in.)	Allowable Tension (lb.)
CNW⅜	0.375	1.125	2,400
CNW½	0.500	1.500	4,270
CNW⅝	0.625	1.875	6,675
CNW¾	0.750	2.250	9,610
CNW⅝-½	0.625 and 0.500	1.500	4,270
CNW¾-⅝	0.750 and 0.625	1.750	6,675

For **SI:** 1 in. = 25.4 mm; 1 lb. = 4.45 N

G Anchorage

Typically rod runs will terminate at the foundation, using the dead load of the concrete to ultimately resist the uplift demands. The building code does, however, allow the Designer of Record to use a percentage of the dead load expected to exist during a wind event (with the percentage based on load combinations for either Strength or Allowable Stress Design). Consequently, if the uplift loads are low enough and dead loads are high enough, it is possible to terminate the rod runs under upper wood floors.

AC391 Criteria Section	AC391 Requirement
6.2.4.5 and 6.3.3.5	Design of the anchorage is the responsibility of the design professional and must be performed in accordance with the applicable code.

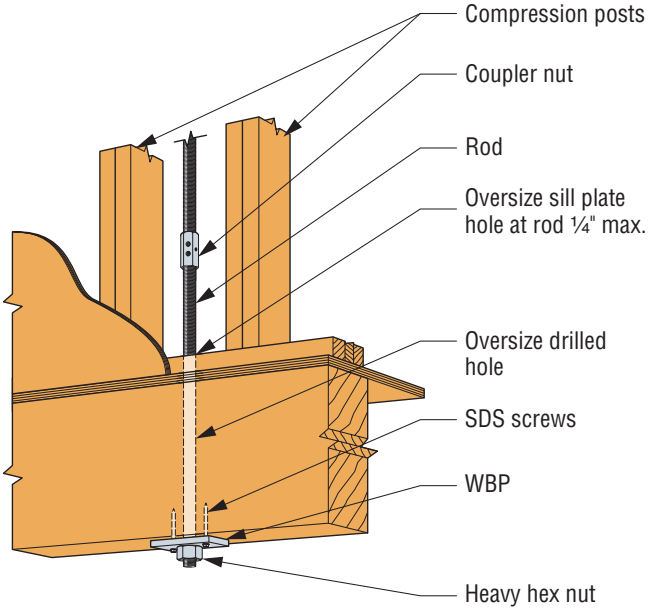

Wood-Beam Plate Detail

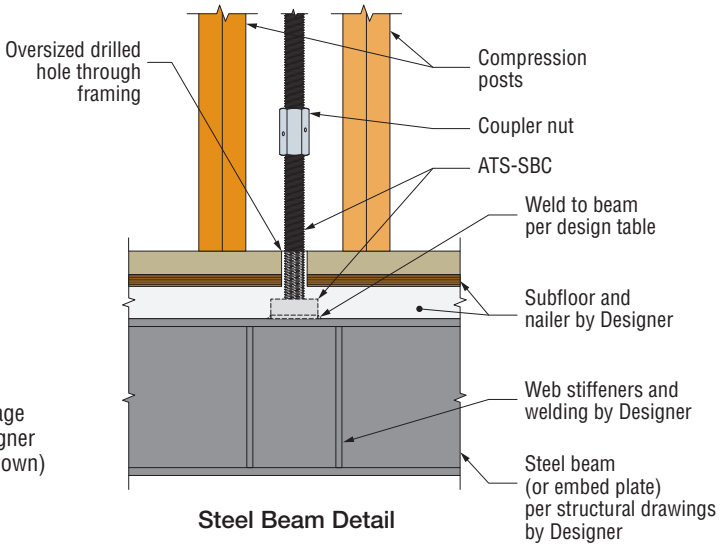

Steel Beam Detail

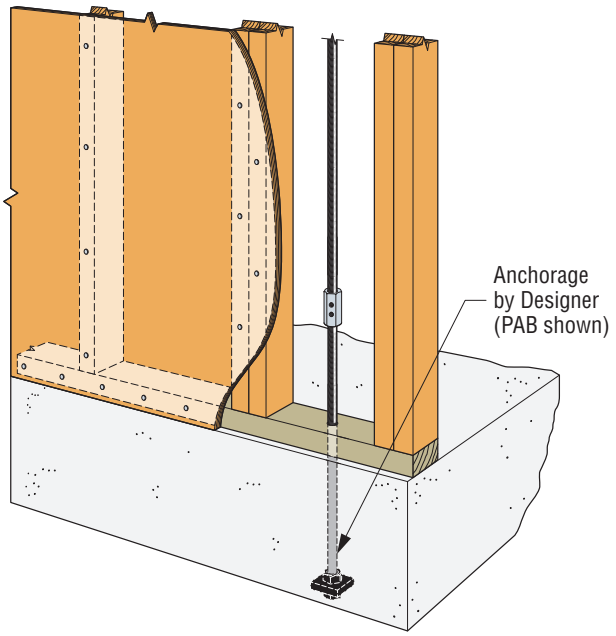

Concrete Anchorage Detail

G Anchorage (cont.)

SET-3G™
High-Strength Epoxy Adhesive

SET-3G is the latest innovation in epoxy anchoring adhesives from Simpson Strong-Tie. Formulated to provide superior performance in cracked and uncracked concrete at elevated temperatures, SET-3G installs and performs in a variety of environmental conditions and temperature extremes. The exceptional bond strength of SET-3G results in high design strengths at shallow embedment depths.

SET-3G Adhesive

AT-XP Adhesive

AT-XP®
Fast-Curing Anchoring Adhesives

AT-XP anchoring adhesive from Simpson Strong-Tie has been formulated for high-strength anchorage of threaded rod and rebar into concrete under a wide range of conditions, such as cold weather installations. Code listed per IAPMO UES ER-263 in accordance with ICC-ES AC308, ACC355.4 and IBC 2012 requirements for cracked and uncracked concrete in static or seismic conditions, AT-XP anchoring adhesive has demonstrated superior performance in reduced-temperature testing (14°F (–10°C)).

Titen HD®
Rod Coupler Threaded-Rod Anchor for Concrete Foundations

The Titen HD rod coupler screw anchor is designed to be used in conjunction with a single or multi-story continuous rod tie-down system. This anchor provides a fast and simple way to attach threaded rod to a concrete stem wall or thickened slab footing. Unlike adhesive anchors, the installation requires no special tool, cure time or secondary setting process; just drill a hole and drive the anchor.

See p. 64 for load tables with possible solutions using Titen HD rod coupler anchors or adhesives.

Titen HD Rod Coupler Screw Anchor
U.S. Patent 5,674,035 and 6,623,228

SIMPSON Strong-Tie®

Allowable (ASD) Tension Loads for Post-Installed Anchors into Uncracked Concrete for Wind Loads

Anchorage		Interior Thickened Slab					Stem Wall or Turned-Down Slab						Elevated Slab				
Product	Size	Geometry (in.)				Allowable Tension (lb.)	Geometry (in.)				Allowable Tension (lb.)		Geometry (in.)			Allowable Tension (lb.)	
		Embed.	Edge	End	Thick.		Embed.	End	Thick.	Width	1¾" Edge Distance	2¾" Edge Distance	Embed.	End	Thick.	1¾" Edge Distance	2¾" Edge Distance
Titen HD® rod coupler	⅜" x 6¾"	5	6	1.75	10	1,740	5	6	10	8	1,740	1,740	5	5.5	10	1,740	1,740
	½" x 9¾"	8	6	10	14	2,420	8	10	14	8	2,375	2,420	8	5	14	2,420	2,420
SET-3G™ adhesive with threaded rod	⅜"-diameter rod	3	4	4	8	1,570	3	4	8	8	1,165	1,450	2½	6	8	1,055	1,365
		4	4	6	10	1,775	5	6	12	8	1,385	1,595	3¼	6	8	1,325	1,640
		4½	6	6	10	2,265	6	8	16	10	1,670	2,040	3½	6	10	1,385	1,695
	½"-diameter rod	3	4	5	8	1,425	3	6	8	8	1,370	1,450	3	6	8	1,380	1,730
		4	6	6	10	3,395	5	8	12	8	1,945	2,045	5	8	8	1,585	1,865
		4½	8	8	12	4,115	7	8	18	10	2,065	2,430	4¼	8	10	1,870	2,225
	⅝"-diameter rod	4	4	6	8	1,940	4	6	10	8	1,905	2,025	3¼	6	8	1,505	1,865
		4	6	8	10	3,745	6	10	16	8	2,210	2,310	6½	10	8	2,055	2,325
		6	10	10	12	6,090	8	12	20	10	2,955	3,055	8½	12	10	2,445	2,800
	¾"-diameter rod	4	4	6	8	1,910	4	8	10	8	1,905	2,050	4	6	8	1,770	2,125
		5	6	8	10	3,495	6	10	14	8	2,305	2,405	6¼	10	8	2,150	2,445
		7	10	10	18	8,015	10	16	24	10	3,360	3,450	8¼	12	10	2,810	3,105
AT-XP® adhesive with threaded rod	⅜"-diameter rod	3	6	8	5	1,265	3	6	8	8	870	1,105	3	6	8	870	1,105
		4	6	8	8	1,775	7	12	9	8	1,725	1,820	6	8	10	1,475	1,875
		4½	7	8	10	2,265	7½	12	10	10	1,845	2,265	7	12	12	1,725	2,185
	½"-diameter rod	3	6	6	6	2,430	4	6	10	8	1,585	1,740	3	6	8	1,255	1,505
		5	6	8	7½	2,675	8½	12	11	8	1,860	1,920	6	8	10	1,635	1,965
		7	8	10	16	3,875	10	16	14	10	2,570	2,640	7	12	12	1,910	2,290
	⅝"-diameter rod	3½	6	6	8	2,460	5	8	10	8	1,775	1,870	4	6	8	1,645	1,975
		6	6	8	10	2,725	9½	12	14	8	1,860	1,920	6	8	10	1,790	2,075
		8	8	10	20	5,355	12	18	16	10	2,790	2,855	8	12	12	2,385	2,770
	¾"-diameter rod	6	6	8	10	2,290	6	8	10	8	1,665	1,745	4	6	8	1,770	2,125
		8	6	8	12	2,835	10½	12	15	8	1,860	1,920	6	8	10	2,215	2,530
		10	8	16	24	6,290	14	22	18	10	3,000	3,055	8	12	12	2,640	2,995

1. Allowable tension loads are based on the Strength Design provisions of ACI 318-14 and have been converted to Allowable Stress Design (ASD) levels by applying a 0.6 factor for Wind loads.
2. Tabluated values are applicable to the conditions listed below. Refer to the Simpson Strong-Tie Anchor Design Software for other conditons.
   a. Minimum concrete compressive strength = 2,500 psi
   b. Uncracked concrete
   c. Dry concrete
   d. Periodic special inspection
   e. Maximum short-term temperature = 150°F
   f. Maximum long-term temperature = 110°F
3. Tabulated values apply to design tension loads consisting of 100% wind loads.

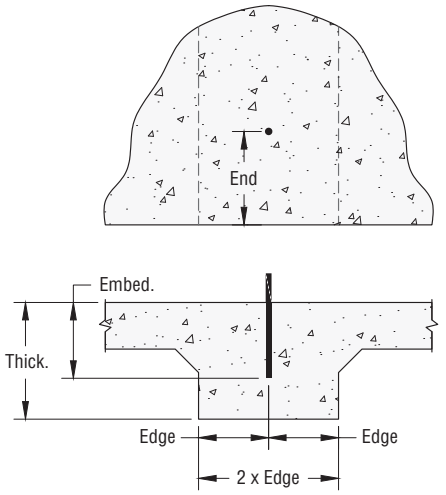

Interior Thickened Slab

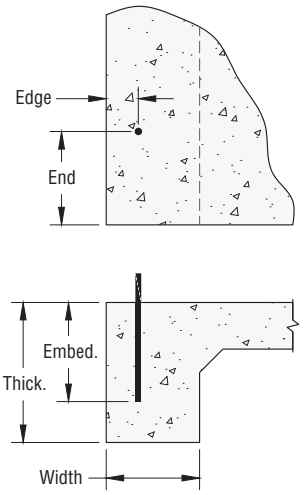

Turned-Down Slab (shown) or Stem Wall

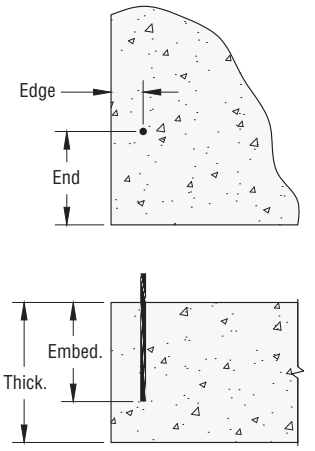

Elevated Slab Edge

Specification of Uplift Restraint Systems

In the previous section of this guide, we shared wind uplift rod run component model numbers and capacities along with the design requirements published by ICC-ES in Acceptance Criteria 391. While some of these design considerations are for the rod run components, others are for the wall-framing elements that transfer load to the rod runs. Simpson Strong-Tie used these requirements to earn the only system evaluation report (ICC-ES ESR-1161) in the industry. However, AC391 also allows for reports that consider only rod run components and not the wall-framing elements. This allows the Designer of Record to specify a rod run based on the allowable load deflection values for the rod run itself, and determine for themselves an appropriate spacing of the rod runs to ensure the wall-framing elements satisfy load and deflection limits for their structure. To assist Designers in the specification, we offer guidance below for two methods of specifying our Strong-Rod URS.

Designer Selects System and Specifies on Building Plans

Once Designers knows their wood framing species, net uplift at roof-bearing walls, length of rod run, then they can specify the following information on the plans:

- Hurricane ties to transfer uplift from roof truss/rafter to top plates
- Method (possibly hurricane ties) of restraining top-plate rotation
- URS model which includes:
  i. Rod diameter, shrinkage compensation device, length and spacing
  ii. Specification format:
  URS {3, 4, 5, 6} – {RTUD, ATUD} x {length in ft.-in.} @ {on-center spacing in inches}
  (Example: URS4-RTUD x 30'-8" @ 36")
- URS rod run termination details (anchorage at foundation or at a raised floor)

To assist in this specification, reference p. 67. Table 1 provides the allowable tension load (P_A) of each URS rod run based on model number (rod diameter and take-up device). Table 2 provides the equations to calculate the deflection of each URS model based on demand tension load, length and wood species. For simplicity, Tables 3 and 4 provide tabulated deflection values for various combinations of tension load and length.

Handling Deferred Submittals

Designers may choose to provide performance specification as part of their construction documents and require the contractor to submit deferred design calculations and shop drawings. To do so, the following performance criteria should be on the plans.

- URS rod run allowable demand tension load
- URS rod run on-center spacing
- URS rod run deflection limits
- URS rod run shrinkage compensation amount required
- URS rod run termination details (anchorage at foundation or at a floor)
- Hurricane ties to transfer uplift from roof truss/rafter to top plates
- Method (possibly hurricane ties) of restraining top plate rotation
- Any additional requirements as determined by the Designer of Record

Specification of Uplift Restraint Systems (cont.)

Design Example:

Given: The exterior bearing walls of a project have a uniform roof uplift load of 250 plf, a roof bearing height of 40' above the top of the foundation, and use wall plates made of southern pine. The Designer has determined that the dead load of the floors above requires anchorage to the foundation and would like to space the URS at 4' on center and limit the URS to a maximum deflection of 0.20" based on project-specific parameters.

Step 1 — Determine the demand load on each URS run.

(250 lb./ft.) (4 ft.) = 1,000 lb. per URS rod run

Step 2 — Choose a shrinkage take-up device and determine the deflection for the URS rod run.

From Table 3, the URS4-RTUD has a deflection of 0.164" < 0.20"

Note: For demand loads (P_D) or rod run lengths (L) not listed in Table 3, Table 2 can be used to calculate URS deflection for any load and run length.

Step 3 — Specify the rod run: rod diameter, shrinkage compensation device, length and spacing.

URS4-RTUD — 40'–0" @ 48"

Step 4 — Specify the URS rod run anchorage.

See Allowable Tension Anchorage Loads on p. 64. Also, you may download the free Anchor Designer Software from **strongtie.com** or use the *Anchoring and Fastening Systems for Concrete and Masonry* catalog.

Step 5 — Specify the appropriate hurricane tie connector to resist the roof member uplift.

The H2.5A hurricane tie capacity is greater than 500 lb. (assumes trusses @ 2 ft. o.c.).

Note: For reference, see the *Wood Construction Connector* catalog or *High Wind–Resistant Construction Application Guide* (F-C-HWRCAG) for multiple hurricane tie options.

Step 6 — Specify a connection to prevent top plate rotation.

See p. 56 to determine the required top-plate rotation restraint connection force. If a tie is specified at every other stud (32" o.c.), then this force is 333 lb. An H2.5A is a good choice since these are already being used for roof-to-top-plate connections.

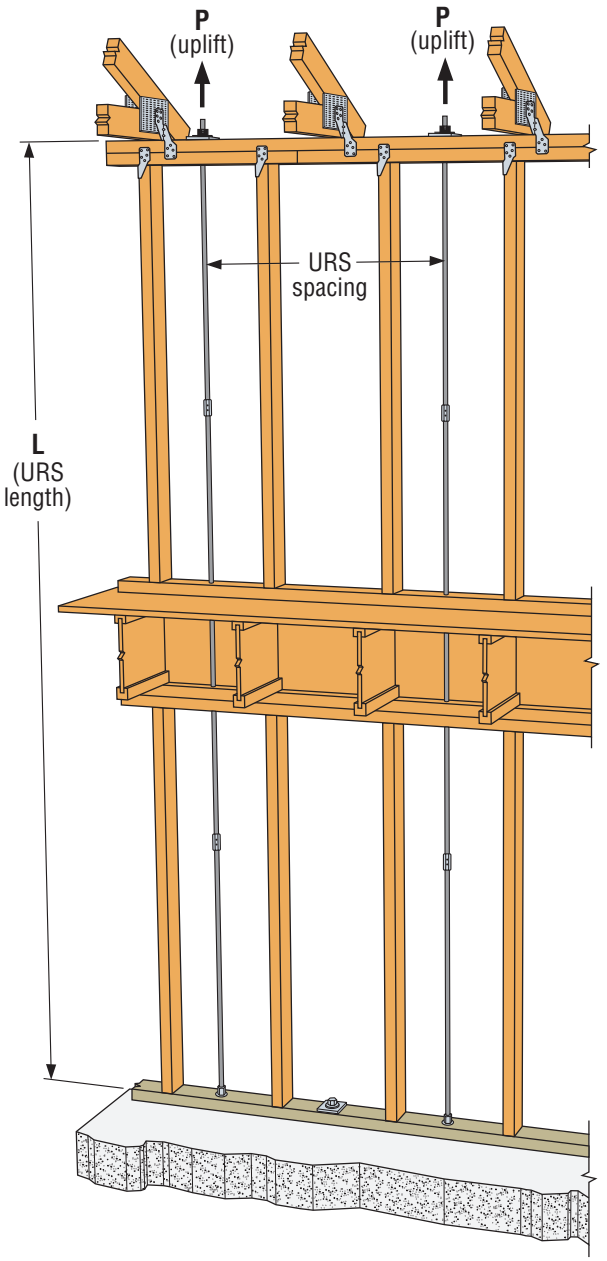

Specification of Uplift Restraint Systems (cont.)

URS Run Tables:

Table 1 — Allowable Loads for URS Runs

URS Model	Allowable Load, P_A (lb.)		
	DF	SP	SPF
URS3-RTUD	2,400		
URS4-RTUD	4,270		
URS5-RTUD	6,675	6,575	5,355
URS6-RTUD	7,080	6,575	5,355
URS3-ATUD	2,310	2,085	1,570
URS4-ATUD	4,270	4,270	3,635
URS5-ATUD	5,250	4,745	3,570
URS6-ATUD	5,135	4,641	3,490

1. Tabulated allowable load is the lowest allowable load of the threaded rod, coupler nut, take-up device, and bearing plate components for each URS model.

Table 2 — Deflection Equations

Shrinkage Take-Up Device	URS Model	Deflection, Δ (in.)		
		DF	SP	SPF
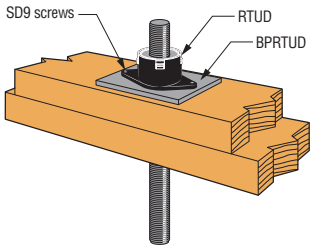 Typical Ratcheting Take-Up Device Assembly Installation	URS3-RTUD	$\frac{P_D(5.3L + 10.9)}{1{,}000{,}000} + 0.053$	$\frac{P_D(5.3L + 11.5)}{1{,}000{,}000} + 0.053$	$\frac{P_D(5.3L + 13.9)}{1{,}000{,}000} + 0.053$
	URS4-RTUD	$\frac{P_D(2.9L + 6.7)}{1{,}000{,}000} + 0.040$	$\frac{P_D(2.9L + 7.4)}{1{,}000{,}000} + 0.040$	$\frac{P_D(2.9L + 9.7)}{1{,}000{,}000} + 0.040$
	URS5-RTUD	$\frac{P_D(1.8L + 5.5)}{1{,}000{,}000} + 0.056$	$\frac{P_D(1.8L + 6.1)}{1{,}000{,}000} + 0.056$	$\frac{P_D(1.8L + 7.9)}{1{,}000{,}000} + 0.056$
	URS6-RTUD	$\frac{P_D(1.2L + 5.5)}{1{,}000{,}000} + 0.057$	$\frac{P_D(1.2L + 6.0)}{1{,}000{,}000} + 0.057$	$\frac{P_D(1.2L + 7.9)}{1{,}000{,}000} + 0.057$
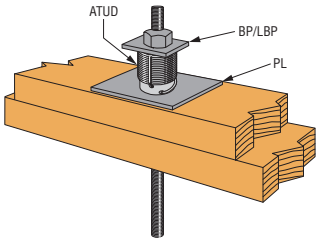 Typical Take-Up Device Assembly Installation	URS3-ATUD	$\frac{P_D(5.3L + 18.7)}{1{,}000{,}000} + 0.001$	$\frac{P_D(5.3L + 20.5)}{1{,}000{,}000} + 0.001$	$\frac{P_D(5.3L + 26.9)}{1{,}000{,}000} + 0.001$
	URS4-ATUD	$\frac{P_D(2.9L + 8.8)}{1{,}000{,}000} + 0.001$	$\frac{P_D(2.9L + 9.6)}{1{,}000{,}000} + 0.001$	$\frac{P_D(2.9L + 12.4)}{1{,}000{,}000} + 0.001$
	URS5-ATUD	$\frac{P_D(1.8L + 9.0)}{1{,}000{,}000} + 0.001$	$\frac{P_D(1.8L + 9.8)}{1{,}000{,}000} + 0.001$	$\frac{P_D(1.8L + 12.6)}{1{,}000{,}000} + 0.001$
	URS6-ATUD	$\frac{P_D(1.2L + 8.6)}{1{,}000{,}000} + 0.002$	$\frac{P_D(1.2L + 9.5)}{1{,}000{,}000} + 0.002$	$\frac{P_D(1.2L + 12.3)}{1{,}000{,}000} + 0.002$

1. Tabulated deflection formulas account for rod elongation, wood bearing deformation, and deflection of shrinkage compensating device. See pp. 68–69 for tabulated deflection values for various length and tension values.

Specification of Uplift Restraint Systems (cont.)

Table 3 — Tabulated Deflection Tables Using RTUD

L (ft.)	P_D (lb.)	DF Top Plates (in.)				SP Top Plates (in.)				SPF Top Plates (in.)			
		URS3-RTUD	URS4-RTUD	URS5-RTUD	URS6-RTUD	URS3-RTUD	URS4-RTUD	URS5-RTUD	URS6-RTUD	URS3-RTUD	URS4-RTUD	URS5-RTUD	URS6-RTUD
60	2,000	—[3]	—[3]	—[3]	0.216	—[3]	—[3]	—[3]	0.218	—[3]	—[3]	—[3]	0.221
	1,500	—[3]	—[3]	0.229	0.177	—[3]	—[3]	0.230	0.177	—[3]	—[3]	0.233	0.180
	1,000	—[3]	0.222	0.171	0.137	—[3]	0.222	0.172	0.137	—[3]	0.225	0.174	0.139
	750	—[3]	0.176	0.143	0.117	—[3]	0.177	0.143	0.117	—[3]	0.178	0.144	0.119
	500	0.219	0.131	0.114	0.097	0.219	0.131	0.114	0.097	0.220	0.132	0.115	0.098
	250	0.136	0.085	0.085	0.077	0.136	0.086	0.085	0.077	0.137	0.086	0.085	0.078
50	2,500	—[2]	—[3]	—[3]	0.225	—[2]	—[3]	—[3]	0.227	—[2]	—[3]	—[3]	0.231
	2,000	—[3]	—[3]	—[3]	0.192	—[3]	—[3]	—[3]	0.193	—[3]	—[3]	—[3]	0.196
	1,500	—[3]	—[3]	0.202	0.158	—[3]	—[3]	0.202	0.159	—[3]	—[3]	0.205	0.162
	1,000	—[3]	0.192	0.153	0.124	—[3]	0.193	0.154	0.125	—[3]	0.195	0.155	0.127
	750	—[3]	0.154	0.129	0.108	—[3]	0.155	0.129	0.108	—[3]	0.157	0.131	0.109
	500	0.192	0.116	0.105	0.091	0.192	0.117	0.105	0.091	0.193	0.118	0.106	0.092
40	3,000	—[2]	—[3]	—[3]	0.222	—[2]	—[3]	—[3]	0.224	—[2]	—[3]	—[3]	0.229
	2,000	—[3]	—[3]	0.214	0.167	—[3]	—[3]	0.215	0.168	—[3]	—[3]	0.218	0.172
	1,500	—[3]	0.225	0.174	0.140	—[3]	0.226	0.175	0.140	—[3]	0.229	0.178	0.143
	1,000	—[3]	0.163	0.135	0.112	—[3]	0.164	0.135	0.113	—[3]	0.166	0.137	0.114
	750	0.221	0.133	0.115	0.098	0.222	0.133	0.115	0.099	0.224	0.135	0.117	0.100
	500	0.165	0.102	0.095	0.085	0.166	0.102	0.096	0.085	0.167	0.103	0.097	0.086
30	4,000	—[2]	—[3]	—[3]	0.228	—[2]	—[3]	—[3]	0.230	—[2]	—[3]	—[3]	0.237
	3,000	—[2]	—[3]	0.237	0.185	—[2]	—[3]	0.239	0.186	—[2]	—[3]	0.244	0.192
	2,000	—[3]	0.228	0.177	0.142	—[3]	0.230	0.178	0.143	—[3]	0.234	0.182	0.147
	1,000	0.224	0.134	0.116	0.100	0.225	0.135	0.117	0.100	0.227	0.137	0.119	0.102
	500	0.139	0.087	0.086	0.078	0.139	0.087	0.086	0.079	0.140	0.089	0.087	0.079
20	5,000	—[2]	—[2]	—[3]	0.208	—[2]	—[2]	—[3]	0.211	—[2]	—[2]	—[3]	0.220
	4,000	—[2]	—[3]	0.225	0.178	—[2]	—[3]	0.227	0.180	—[2]	—[3]	0.234	0.188
	3,000	—[2]	0.235	0.182	0.148	—[2]	0.237	0.184	0.149	—[2]	0.244	0.190	0.155
	2,000	—[3]	0.170	0.140	0.118	—[3]	0.171	0.141	0.119	—[3]	0.176	0.145	0.122
	1,000	0.171	0.105	0.098	0.087	0.171	0.106	0.099	0.088	0.174	0.108	0.101	0.090
	500	0.112	0.073	0.077	0.072	0.112	0.073	0.077	0.072	0.113	0.074	0.078	0.073
10	5,000	—[2]	—[2]	0.175	0.146	—[2]	—[2]	0.178	0.149	—[2]	—[2]	0.187	0.158
	4,000	—[2]	0.183	0.151	0.129	—[2]	0.186	0.153	0.131	—[2]	0.195	0.161	0.138
	3,000	—[2]	0.148	0.127	0.111	—[2]	0.150	0.129	0.112	—[2]	0.157	0.135	0.118
	2,000	0.182	0.112	0.104	0.093	0.183	0.113	0.105	0.094	0.188	0.118	0.108	0.098
	1,000	0.117	0.076	0.080	0.075	0.118	0.077	0.080	0.075	0.120	0.079	0.082	0.077
	500	0.085	0.058	0.068	0.066	0.085	0.058	0.068	0.066	0.087	0.059	0.069	0.067

1. Tabulated deflection values include rod elongation, wood bearing deformation and deflection of shrinkage compensating device. For design loads and lengths not listed, use the deflection calculations tabulated on p. 67.
2. Noted values exceed the maximum allowable load for the URS run.
3. Noted values exceed the maximum rod elongation of 0.18" specified in Section 3.2.1.1 of ICC-ES AC391.

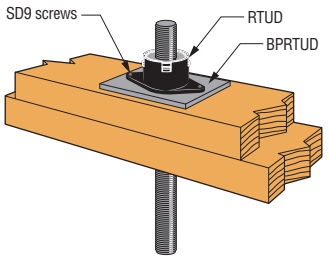

Typical Ratcheting Take-Up Device Assembly Installation

Specification of Uplift Restraint Systems (cont.)

Table 4 — Tabulated Deflection Tables Using ATUD

L (ft.)	P_D (lb.)	DF Top Plates (in.)				SP Top Plates (in.)				SPF Top Plates (in.)			
		URS3-ATUD	URS4-ATUD	URS5-ATUD	URS6-ATUD	URS3-ATUD	URS4-ATUD	URS5-ATUD	URS6-ATUD	URS3-ATUD	URS4-ATUD	URS5-ATUD	URS6-ATUD
60	2,000	—[3]	—[3]	—[3]	0.168	—[3]	—[3]	—[3]	0.169	—[2]	—[3]	—[3]	0.175
	1,500	—[3]	—[3]	0.179	0.126	—[3]	—[3]	0.180	0.128	—[3]	—[3]	0.185	0.132
	1,000	—[3]	0.185	0.120	0.085	—[3]	0.186	0.121	0.086	—[3]	0.188	0.123	0.089
	750	—[3]	0.139	0.090	0.064	—[3]	0.139	0.091	0.065	—[3]	0.142	0.093	0.067
	500	0.171	0.093	0.060	0.043	0.171	0.093	0.061	0.044	0.175	0.095	0.062	0.045
	250	0.086	0.047	0.031	0.023	0.086	0.047	0.031	0.023	0.088	0.048	0.032	0.024
50	2,500	—[2]	—[3]	—[3]	0.178	—[2]	—[3]	—[3]	0.180	—[2]	—[3]	—[3]	0.187
	2,000	—[3]	—[3]	—[3]	0.143	—[3]	—[3]	—[3]	0.145	—[2]	—[3]	—[3]	0.150
	1,500	—[3]	—[3]	0.152	0.108	—[3]	—[3]	0.153	0.109	—[3]	—[3]	0.157	0.113
	1,000	—[3]	0.156	0.102	0.072	—[3]	0.156	0.102	0.073	—[3]	0.159	0.105	0.076
	750	—[3]	0.117	0.076	0.055	—[3]	0.118	0.077	0.055	—[3]	0.120	0.079	0.058
	500	0.144	0.078	0.051	0.037	0.145	0.079	0.052	0.038	0.148	0.080	0.053	0.039
40	3,000	—[2]	—[3]	—[3]	0.176	—[2]	—[3]	—[3]	0.179	—[2]	—[3]	—[3]	0.187
	2,000	—[3]	—[3]	0.165	0.118	—[3]	—[3]	0.167	0.120	—[2]	—[3]	0.173	0.126
	1,500	—[3]	0.189	0.124	0.089	—[3]	0.190	0.126	0.090	—[3]	0.195	0.130	0.095
	1,000	—[3]	0.126	0.083	0.060	—[3]	0.127	0.084	0.061	—[3]	0.130	0.087	0.064
	750	0.175	0.095	0.063	0.046	0.177	0.096	0.063	0.046	0.181	0.098	0.065	0.048
	500	0.117	0.064	0.042	0.031	0.118	0.064	0.043	0.031	0.121	0.066	0.044	0.033
30	4,000	—[2]	—[3]	—[3]	0.185	—[2]	—[3]	—[3]	0.188	—[2]	—[2]	—[2]	—[2]
	3,000	—[2]	—[3]	0.193	0.139	—[2]	—[3]	0.195	0.142	—[2]	—[3]	0.204	0.150
	2,000	—[3]	0.194	0.129	0.093	—[3]	0.195	0.130	0.095	—[2]	0.201	0.136	0.101
	1,000	0.180	0.097	0.065	0.048	0.182	0.098	0.066	0.049	0.188	0.101	0.069	0.051
	500	0.090	0.049	0.033	0.025	0.091	0.050	0.033	0.025	0.095	0.051	0.035	0.027
20	5,000	—[2]	—[2]	—[3]	0.169	—[2]	—[2]	—[2]	—[2]	—[2]	—[2]	—[2]	—[2]
	4,000	—[2]	—[3]	0.183	0.135	—[2]	—[3]	0.187	0.139	—[2]	—[2]	—[2]	—[2]
	3,000	—[2]	0.203	0.138	0.102	—[2]	0.205	0.140	0.105	—[2]	0.213	0.149	0.113
	2,000	—[3]	0.135	0.092	0.069	—[3]	0.137	0.094	0.070	—[2]	0.142	0.099	0.076
	1,000	0.126	0.068	0.047	0.035	0.128	0.069	0.047	0.036	0.135	0.072	0.050	0.039
	500	0.064	0.035	0.024	0.019	0.065	0.035	0.024	0.019	0.068	0.036	0.026	0.021
10	5,000	—[2]	—[2]	0.138	0.107	—[2]	—[2]	—[2]	—[2]	—[2]	—[2]	—[2]	—[2]
	4,000	—[2]	0.153	0.110	0.086	—[2]	0.156	0.113	0.089	—[2]	—[2]	—[2]	—[2]
	3,000	—[2]	0.115	0.083	0.065	—[2]	0.117	0.085	0.067	—[2]	0.126	0.094	0.076
	2,000	0.145	0.077	0.056	0.044	0.149	0.079	0.057	0.046	—[2]	0.084	0.063	0.051
	1,000	0.073	0.039	0.028	0.023	0.075	0.040	0.029	0.024	0.081	0.043	0.032	0.027
	500	0.037	0.020	0.015	0.012	0.038	0.020	0.015	0.013	0.041	0.022	0.016	0.014

1. Tabulated deflection values include rod elongation, wood bearing deformation and deflection of shrinkage compensating device. For design loads and lengths not listed, use the deflection calculations tabulated on p. 67.
2. Noted values exceed the maximum allowable load for the URS run.
3. Noted values exceed the maximum rod elongation of 0.18" specified in Section 3.2.1.1 of ICC-ES AC391.

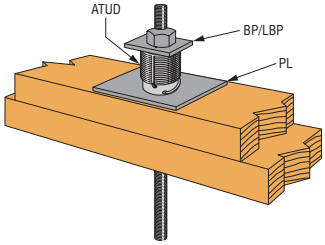

Typical Take-Up Device Assembly Installation

Reliable, Safe and Economical Roof Uplift Solutions

Simpson Strong-Tie understands that Designers need economical solutions to establish a continuous load path from the roof to the foundation. In addition to our Strong-Rod™ Uplift Restraint System for roofs, Simpson Strong-Tie has long been the industry leader in providing connector and fastening solutions to meet these specific requirements.

Simpson Strong-Tie® Connectors for Roof Uplift

Simpson Strong-Tie offers a wealth of top-plate-to-stud, top-plate-to-truss and hurricane tie connectors that can be installed to resist wind uplift forces that affect roofs. Depending on the particular connection and the loads required, you can be confident that Simpson Strong-Tie has the connector you need.

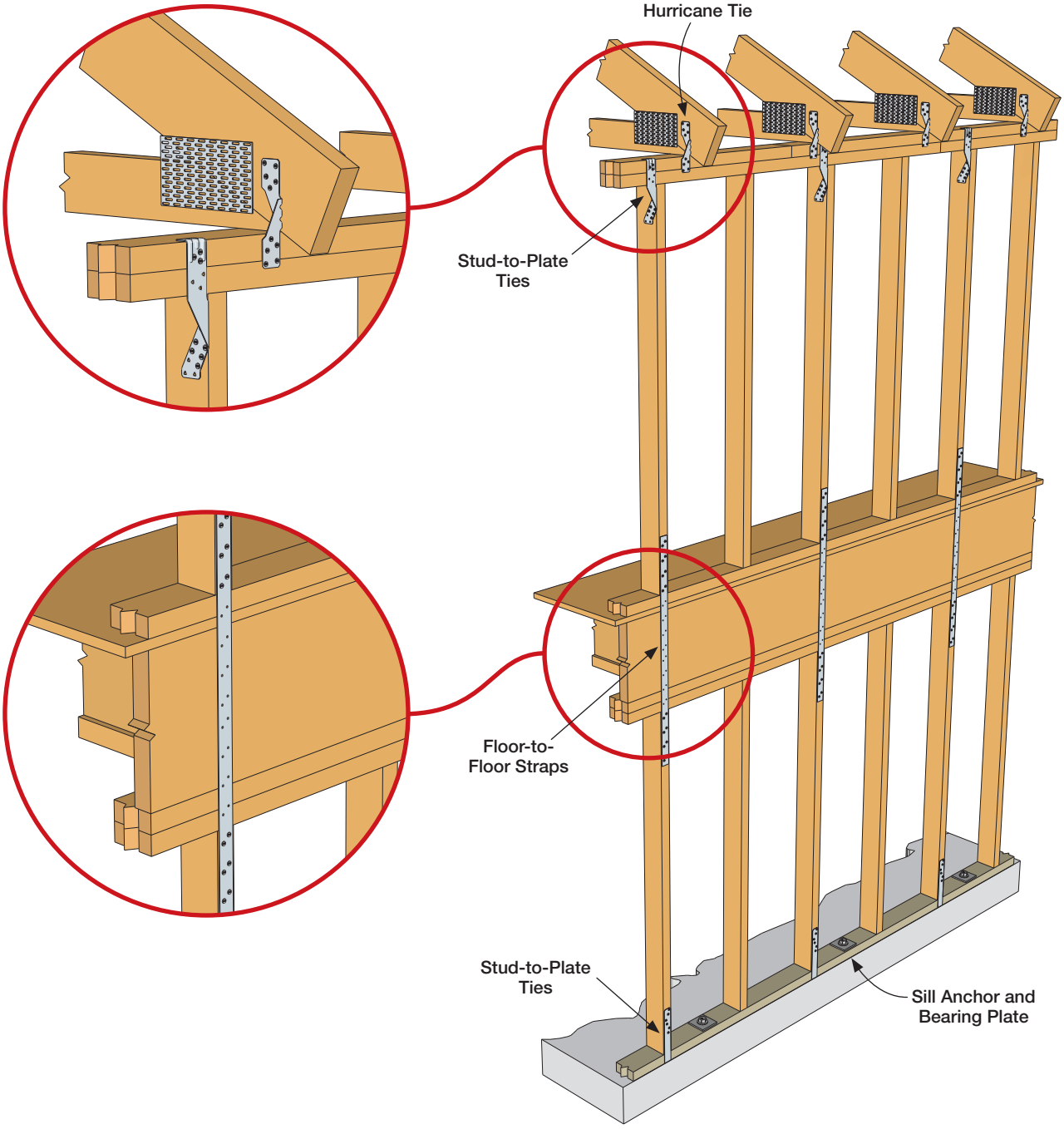

Fastening Systems Designed for Floor-to-Floor, Stud-to-Plate and Truss-to-Top-Plate Connections

Simpson Strong-Tie provides two Strong-Drive® fastener models designed to create a continuous load path from the roof down to the foundation. The Strong-Drive SDWF Floor-to-Floor screw, when used with TUW take-up washer, is designed to simplify floor-to-floor wind-uplift restraint while providing shrinkage compensation and superior performance over the life of the structure. The Strong-Drive SDWF Floor-to-Floor screw is code listed in ICC-ES ESR-3046, and the TUW take-up washer is in ESR-2320. The unique design of the Strong-Drive SDWF Floor-to-Floor screw enables it to attach upper and lower walls together from the top, spanning the floor system and providing an easy-to-install connection within the continuous uplift load path of the structure. The Strong-Drive SDWC Truss screw is tested in accordance with ICC-ES AC233 (screw) and AC13 (wall assembly and roof-to-wall assembly) for uplift and lateral loads between wall plates and vertical wall framing and between the top plate and the roof rafters or trusses.

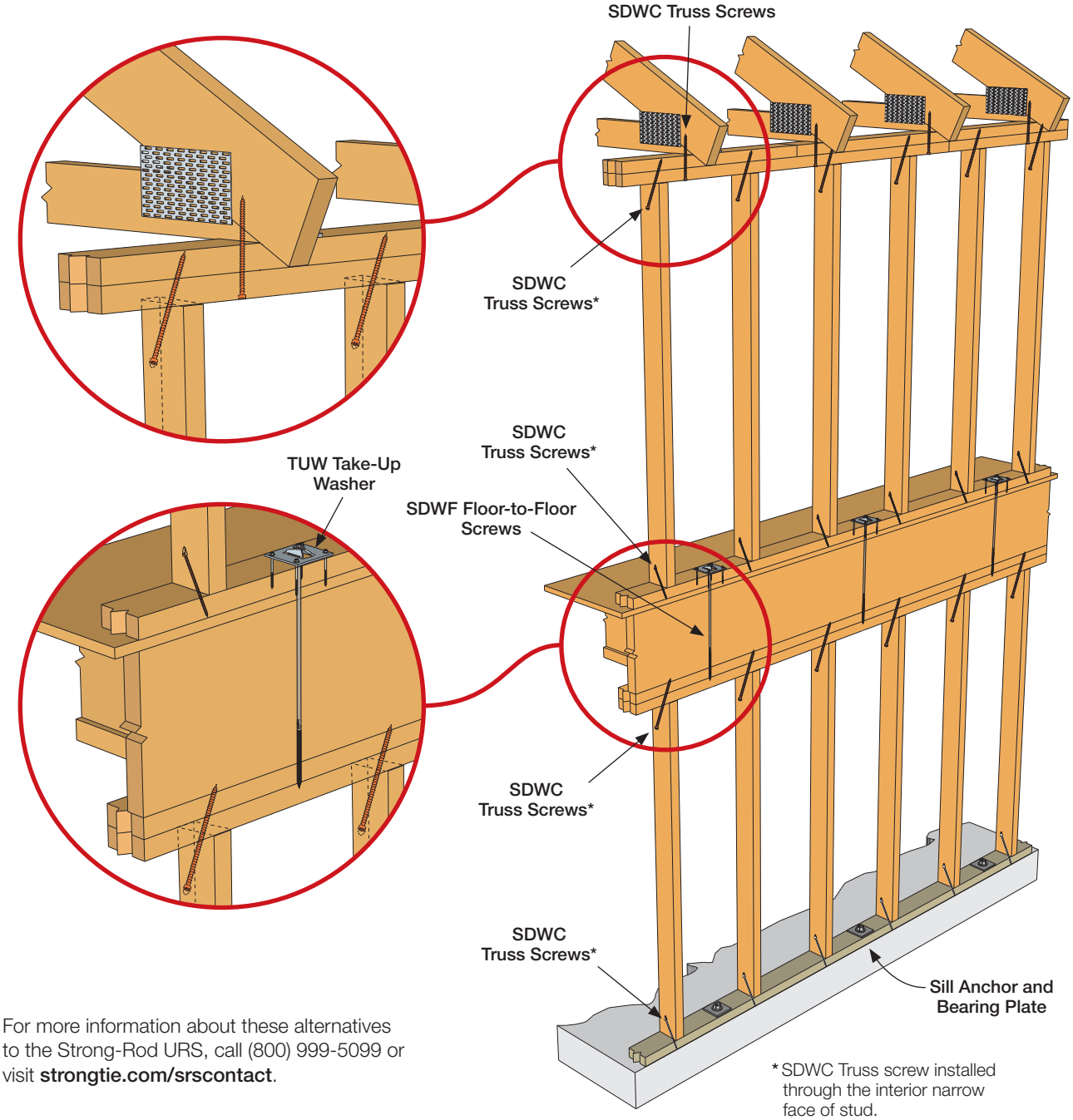

For more information about these alternatives to the Strong-Rod URS, call (800) 999-5099 or visit **strongtie.com/srscontact**.

* SDWC Truss screw installed through the interior narrow face of stud.

Notes

Notes

Notes

Notes

On site for your success

Ensuring the integrity of mid-rise structures against seismic and wind forces requires many complex design considerations unique to each project. Our onsite knowledge is the perfect complement to our Strong-Rod systems. With Simpson Strong-Tie field support, you'll have highly skilled experts on the jobsite to help you manage project changes, answer product questions and supply engineering advice. We offer training, conduct pre-construction meetings and provide a project overview so that your team can build the safest structure possible while keeping material costs low and installation easy. When it comes to onsite support, we're there every step of the way.

F-L-SRS18 Effective 5/1/2018 Expires 12/31/2020