SIMPSON Strong-Tie®

High Wind Guide

A GUIDE TO SELECT CONNECTIONS IN HIGH WIND AREAS

(800) 999-5099 | strongtie.com

High-Performance Solutions for High-Wind Forces.

Time and again, we see the havoc that high winds in the form of tornadoes or hurricanes can wreak upon structures. Some forces can be too great for human engineering to counter. Fortunately, however, there are precautions we can take to limit the damage caused by high-wind events.

Through over 60 years of field experience and countless hours of research, Simpson Strong-Tie has developed the industry's most comprehensive line of wood construction connectors and fasteners specifically designed to resist uplift and lateral forces caused by high winds. Our state-of-the-art manufacturing facilities and processes help ensure that Simpson Strong-Tie connectors and fasteners are consistently the most reliable in the industry.

This guide is designed to help you easily locate the specific connector you need for building in high-wind areas. Whether you search by product or application, Simpson Strong-Tie has the right connector to help you build safe, strong structures. To learn more, visit **strongtie.com** or call (800) 999-5099.

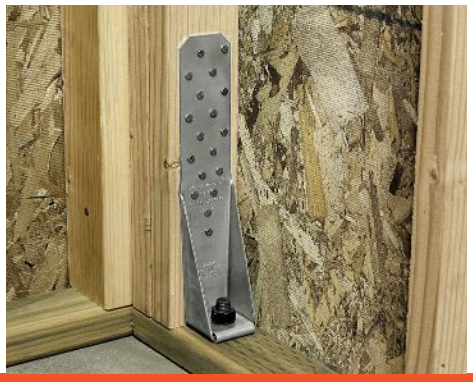

Subject Index

Company Profile

For over 60 years, Simpson Strong-Tie has focused on creating structural products that help people build safer and stronger homes and buildings. A leader in structural systems research and technology, Simpson Strong-Tie is one of the largest suppliers of structural building products in the world. The Simpson Strong-Tie commitment to product development, engineering, testing and training is evident in the consistent quality and delivery of its products and services.

For more information, visit the company's website at **strongtie.com/hw**.

The Simpson Strong-Tie Company Inc. "No Equal" pledge includes:

- Quality products value-engineered for the lowest installed cost at the highest-rated performance levels
- Most thoroughly tested and evaluated products in the industry
- Strategically located manufacturing and warehouse facilities
- National code agency listings
- Largest number of patented connectors in the industry
- Global locations with an international sales team
- In-house R&D and tool and die professionals
- In-house product testing and quality control engineers
- Support of industry groups including ACI, AISC, AISI, AITC, ASCE, ASTM, AWC, AWPA, CFSEI, CSI, ICFA, NBMDA, NFBA, NLBMDA, SDI, SETMA, SFA, SFIA, SREA, STAFDA, TPI, WDSC, WIJMA, WTCA and local engineering groups.

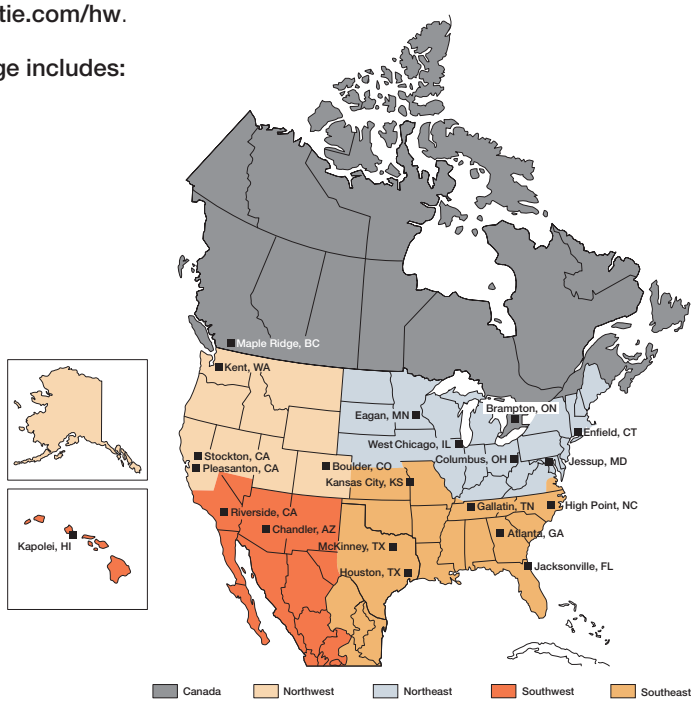

The Simpson Strong-Tie Quality Policy

We help people build safer structures economically. We do this by designing, engineering and manufacturing "No Equal" structural connectors and other related products that meet or exceed our customers' needs and expectations. Everyone is responsible for product quality and is committed to ensuring the effectiveness of the Quality Management System.

Karen Colonias
Chief Executive Officer

Getting Fast Technical Support

When you call for engineering technical support, we can help you quickly if you have the following information at hand. This will help us to serve you promptly and efficiently.

- Which Simpson Strong-Tie® catalog are you using? (See the back cover for the catalog number.)
- Which Simpson Strong-Tie product are you using?
- What is your load requirement?
- What are the carried member's width and height?
- What are the supporting member's width and height?
- What are the carried and supporting members' material and application?

We Are ISO 9001:2015 Registered

Simpson Strong-Tie is an ISO 9001:2015 registered company. ISO 9001:2015 is an internationally-recognized quality assurance system which lets our domestic and international customers know that they can count on the consistent quality of Simpson Strong-Tie® products and services.

(800) 999-5099 • strongtie.com/hw

Warning

Simpson Strong-Tie Company Inc. structural connectors, anchors, and other products are designed and tested to provide specified design loads. To obtain optimal performance from Simpson Strong-Tie Company Inc. products and achieve maximal allowable design load, the products must be properly installed and used in accordance with the installation instructions and design limits provided by Simpson Strong-Tie Company Inc. To ensure proper installation and use, designers and installers must carefully read the following General Notes, General Instructions for the Installer and General Instructions for the designer, as well as consult the applicable catalog pages for specific product installation instructions and notes.

Proper product installation requires careful attention to all notes and instructions, including these basic rules:

1. Be familiar with the application and correct use of the connector.
2. Follow all installation instructions provided in the applicable catalog, website, *Installer's Pocket Guide* or any other Simpson Strong-Tie publications.
3. Install all required fasteners per installation instructions provided by Simpson Strong-Tie Company Inc.: (a) use proper fastener type; (b) use proper fastener quantity; (c) fill all fastener holes; (d) do not overdrive or underdrive nails, including when using powder nailers; and (e) ensure screws are completely driven.
4. Only bend products that are specifically designed to be bent. For those products that require bending (such as strap-type holdowns, straight-end twist straps, etc.), do not bend more than one full cycle.
5. Cut joists to the correct length, do not "short-cut." The gap between the end of the joist and the header material should be no greater than ⅛" unless otherwise noted.

Failure to follow all of the notes and instructions provided by Simpson Strong-Tie Company Inc. may result in improper installation of products. Improperly installed products may not perform to the specifications set forth in this catalog and may reduce a structure's ability to resist the movement, stress and loading that occurs from gravity loads as well as impact events such as earthquakes and high-velocity winds.

Simpson Strong-Tie Company Inc. does not guarantee the performance or safety of products that are modified, improperly installed or not used in accordance with the design and load limits set forth in this catalog.

Important Information

In addition to following the basic rules provided above as well as all notes, warnings and instructions provided in the catalog, installers, designers, engineers and consumers should consult the Simpson Strong-Tie Company Inc. website at **strongtie.com** to obtain additional design and installation information.

Limited Warranty

Simpson Strong-Tie Company Inc. warrants catalog products to be free from defects in material or manufacturing. Simpson Strong-Tie Company Inc. products are further warranted for adequacy of design when used in accordance with design limits in this catalog and when properly specified, installed and maintained. This warranty does not apply to uses not in compliance with specific applications and installations set forth in this catalog, or to non-catalog or modified products, or to deterioration due to environmental conditions.

Simpson Strong-Tie® connectors are designed to enable structures to resist the movement, stress and loading that results from impact events such as earthquakes and high-velocity winds. Other Simpson Strong-Tie products are designed to the load capacities and uses listed in this catalog. Properly-installed Simpson Strong-Tie products will perform in accordance with the specifications set forth in the applicable Simpson Strong-Tie catalog. Additional performance limitations for specific products may be listed on the applicable catalog pages.

Due to the particular characteristics of potential impact events, the specific design and location of the structure, the building materials used, the quality of construction, and the condition of the soils involved, damage may nonetheless result to a structure and its contents even if the loads resulting from the impact event do not exceed Simpson Strong-Tie catalog specifications and Simpson Strong-Tie connectors are properly installed in accordance with applicable building codes.

All warranty obligations of Simpson Strong-Tie Company Inc. shall be limited, at the discretion of Simpson Strong-Tie Company Inc., to repair or replacement of the defective part. These remedies shall constitute Simpson Strong-Tie Company Inc.'s sole obligation and sole remedy of purchaser under this warranty. In no event will Simpson Strong-Tie Company Inc. be responsible for incidental, consequential, or special loss or damage, however caused.

This warranty is expressly in lieu of all other warranties, expressed or implied, including warranties of merchantability or fitness for a particular purpose, all such other warranties being hereby expressly excluded. This warranty may change periodically — consult our website strongtie.com for current information.

Terms and Conditions of Sale

Product Use

Products in this catalog are designed and manufactured for the specific purposes shown, and should not be used with other connectors not approved by a qualified designer. Modifications to products or changes in installations should only be made by a qualified designer. The performance of such modified products or altered installations is the sole responsibility of the designer.

Indemnity

Customers or designers modifying products or installations, or designing non-catalog products for fabrication by Simpson Strong-Tie Company Inc. shall, regardless of specific instructions to the user, indemnify, defend and hold harmless Simpson Strong-Tie Company Inc. for any and all claimed loss or damage occasioned in whole or in part by non-catalog or modified products.

Non-Catalog and Modified Products

Consult Simpson Strong-Tie Company Inc. for applications for which there is no catalog product, or for connectors for use in hostile environments, with excessive wood shrinkage, or with abnormal loading or erection requirements.

Non-catalog products must be designed by the customer and will be fabricated by Simpson Strong-Tie in accordance with customer specifications.

Simpson Strong-Tie cannot and does not make any representations regarding the suitability of use or load-carrying capacities of non-catalog products. Simpson Strong-Tie provides no warranty, express or implied, on non-catalog products. F.O.B. Shipping Point unless otherwise specified.

General Notes

1. Refer to the current Simpson Strong-Tie® *Wood Construction Connectors* catalog for connector load values, installation, fastener schedules and other important information including Terms and Conditions of Sale and Building Code Evaluation listings.
2. The term "designer" used throughout this catalog is intended to mean a licensed/certified building design professional, a licensed professional engineer, or a licensed architect.
3. Throughout the guide there are installation drawings showing the load transfer from one element in the structure to another. Additional connections may be required to safely transfer the loads through the structure. It is the designer's responsibility to specify and detail all necessary connections to ensure that a continuous load path is provided as required by the building code.
4. Unless otherwise noted, allowable connector loads are provided with a 160% load duration increase (for wind) on the calculated capacity of the nails. No further load duration increase is allowed by the building code.
5. Generally, connector allowable loads published in this guide are limited to the lowest of the following: average recorded test load at ⅛" deflection; lowest ultimate recorded test load of 3 test specimens divided by 3 (or the average of 6 specimens divided by 3); or the calculated value based on steel, wood bearing, and/or fastener capacity. Contact Simpson Strong-Tie for information on allowable loads for other product types.
6. When multiple connectors are used, they must be installed so fastener locations do not overlap.
7. When a connector is loaded simultaneously in more than one direction, the allowable load must be evaluated as shown here.

   For all connectors use the following equation:
   Design Uplift/Allowable Uplift + Design Lateral Parallel to Plate / Allowable Lateral Parallel to Plate + Design Lateral Perpendicular to Plate / Allowable Lateral Perpendicular to Plate < 1.0

   The three terms in the unity equation are due to the possible directions that exist to generate force on a connector. The number of terms that must be considered for simultaneous loading is at the sole discretion of the designers and is dependent on their method of calculating wind forces and the utilization of the connector within the structural system.

   As an alternative, certain roof-to-wall connectors (embedded truss anchors, seismic and hurricane ties and twist straps, p. 14 — excluding HGA10KT, pp.16-18) can be evaluated using the following: the design load in each direction shall not exceed the published allowable load in that direction multiplied by 0.75.
8. Unless otherwise noted, loads are in pounds; dimensions are in inches.
9. All references to bolts are for structural-quality through bolts (not lag screws or carriage bolts) equal to or better than ASTM Standard A307, Grade A.
10. Refer to the Connector-Anchor Selector at **www.strongtie.com** for anchorage to concrete design.
11. Illustrations showing hurricane ties installed on the outside of the wall are for clarity and assume a minimum overhang of 3½". Installation on the inside of the wall is acceptable (see General Note 13 below). For uplift continuous load path, connections in the same area (e.g., truss-to-plate connector and plate-to-stud connector) must be on same side of the wall.
12. When using wood structural panel sheathing for wind uplift continuous load path, refer to the American Wood Council's SDPWS for further information.
13. When installing hurricane ties on the inside of the wall, special care must be taken to prevent condensation on the inside of the completed structure in cold climates.
14. Truss plates shown may not be manufactured by Simpson Strong-Tie.
15. Built-up lumber (multiple members) must be fastened together to act as one unit to resist the applied load (excluding the connector fasteners). This must be determined by the designer.
16. When connecting DF/SP members to SPF lumber, use SPF allowable loads.
17. Concrete anchorage solutions provided in this catalog are based on applications in uncracked concrete resisting wind and low seismic loads (any structure in Seismic Design Categories A and B and detached one- and two-family dwellings in Seismic Design Category C).
18. Some hurricane ties can be used for bearing enhancement, see T-C-HTIEBEAR.
19. Twist straps do not have to be wrapped over the truss to achieve the load.
20. Many of the products in this guide are patented or patent pending. Please see **strongtie.com/patent** for more information.

Changes in Allowable Loads

Due to changes in the 2015 International Building Code, this guide has more changes in allowable loads than usual. The 2015 IBC Section 2303.5 specifies that joist hangers shall be tested per ASTM D7147 Testing and Establishing Loads of Joist Hangers. Previous versions of the IBC required testing to comply with ASTM D1761 Test Method for Mechanical Fasteners in Wood. Both standards determine a connector's allowable load as the lowest of the following:

1. Lowest ultimate load of three tests (or average of 6) with a safety factor of 3
2. Average load at ⅛-inch deflection
3. Calculations per American Wood Council National Design Specification for Wood Construction (NDS)

The primary changes in ASTM D7147 are requirements to measure properties of the tested materials, such as steel strength, fastener strength and wood specific gravity. When tested material properties exceed the specified properties, report holders are required to adjust the tested ultimate loads to account for the material over-strength.

These requirements have also been added to ICC-ES AC13 Acceptance Criteria for Joist Hangers and Similar Devices. We have indicated allowable load changes greater than 5% in **RED** in the product load tables.

For more information, visit strongtie.com/loadchanges.

Understanding the Corrosion Issue

Metal connectors, fasteners and anchors can corrode and lose carrying capacity when installed in corrosive environments or when installed in contact with corrosive materials. The many variables present in a building environment make it impossible to predict accurately whether, or when, corrosion will begin to reach a critical level. This relative uncertainty makes it crucial that specifiers and users be knowledgeable about the potential risks and select a product suitable for the intended use. When there is any uncertainty about the possible corrosion risks of any installation, a qualified professional should be consulted. Because of the risks posed by corrosion, periodic inspections should be performed by a qualified engineer or qualified inspector and maintenance performed accordingly.

It's common to see some corrosion in outdoor applications. Even stainless steel can corrode. The presence of some corrosion does not mean that load capacity has been affected or that failure is imminent. If significant corrosion is apparent or suspected, then the wood, fasteners, anchors, and connectors should be inspected by a qualified engineer or qualified inspector. Replacement of affected components may be appropriate.

Because of the many variables involved, Simpson Strong-Tie cannot provide estimates of the service life of connectors, anchors, and fasteners. We suggest that all users and specifiers obtain recommendations on corrosion from the suppliers of the materials that will be used with Simpson Strong-Tie products, in particular, treated wood or concrete. We have attempted to provide basic knowledge on the subject here, and have additional information in our technical bulletins on the topic (**strongtie.com/info**). The Simpson Strong-Tie website should always be consulted for the latest information.

Corrosion Conditions

Corrosion can result from many combinations of environmental conditions, materials, construction design, and other factors, and no single guideline addresses all corrosion possibilities. Nevertheless, important corrosion information can be obtained from the American Wood Protection Association (AWPA), the International Building Code (IBC), International Residential Code (IRC), and local building codes. The following discussion provides general guidelines and approaches for the selection of Simpson Strong-Tie products for various construction conditions, but is not intended to supersede the guidelines of the AWPA, IBC, IRC, or local building codes.

Corrosion issues for Simpson Strong-Tie products generally fall into four categories:

1. Environmental and Construction Factors

Many environments and materials can cause corrosion, including ocean salt air, condensation, duration of wetness, fire retardants, fumes, fertilizers, chlorides, sulfates, preservative-treated wood, de-icing salts, dissimilar metals, soils, and more. Designers must take all of these factors into account when deciding which Simpson Strong-Tie products to use with which corrosion-resistant coatings or materials.

The design, quality of construction, and misinstallation can directly affect the corrosion resistance of products. A product intended and installed for use in dry-service environment may corrode if the structure design or building materials allow moisture intrusion, or expose the product to corrosive conditions, such as moisture or chemicals contained in the construction materials, soils, or atmospheres.

2. Chemically Treated Lumber

Some wood-preservative or fire-retardant chemicals or chemical retention levels create increased risk of corrosion and are corrosive to steel connectors and fasteners. For example, testing by Simpson Strong-Tie has shown that ACQ-Type D is more corrosive than Copper Azole, Micronized Copper Azole, or CCA-C. At the same time, other tests have shown that inorganic boron treatment chemicals, specifically SBX-DOT, are less corrosive than CCA-C.

Because different chemical treatments of wood have different corrosion effects, it's important to understand the relationship between the wood treatment chemicals and the coatings and base metals of Simpson Strong-Tie products.

The preservative-treated wood supplier should provide all of the pertinent information about the treated wood product. The information should include the AWPA Use Category Designation, wood species group, wood treatment chemical, and chemical retention. See building code requirements and appropriate evaluation reports for corrosion effects of wood treatment chemicals and for fastener corrosion resistance recommendations.

With Fire-Retardant-Treated (FRT) Wood, the 2015 and 2018 IBC Section 2304.10.5.4 and 2015 and 2018 IRC Section R317.3.4 refer to the manufacturers' recommendations for fastener corrosion requirements. In the absence of recommendations from the FRT manufacturer, the building codes require fasteners to be hot-dip galvanized, stainless steel, silicon bronze or copper. Simpson Strong-Tie further requires that the fastener is compatible with the metal connector hardware. Fastener shear and withdrawal allowable loads may be reduced in FRT lumber. Refer to the FRT manufacturer's evaluation report for potential reduction factors.

3. Dissimilar Metals and Galvanic Corrosion

Galvanic corrosion occurs when two electrochemically dissimilar metals contact each other in the presence of an electrolyte (such as water) that acts as a conductive path for metal ions to move from the more anodic to the more cathodic metal. Good detailing practice, including the following, can help reduce the possibility of galvanic corrosion of fasteners and connectors:

- Use fasteners or anchors and connectors with similar electrochemical properties
- Use insulating materials to separate dissimilar metals
- Ensure that the fastener or anchor is the cathode when dissimilar connector metals are present
- Prevent exposure to and pooling of electrolytes

Galvanic Series of Metals

Corroded End (Anode)
Magnesium, Magnesium alloys, Zinc
Aluminum 1100, Cadmium, Aluminum 2024-T4, Iron and Steel
Lead, Tin, Nickel (active), Inconel Ni-Cr alloy (active), Hastelloy alloy C (active)
Brasses, Copper, Cu-Ni alloys, Monel
Nickel (passive)
304 stainless steel (passive), 316 stainless steel (passive), Hasteloy alloy C (passive)
Silver, Titanium, Graphite, Gold, Platinum
Protected End (Cathode)

If you are uncertain about the galvanic corrosion potential of any installation, always consult with a corrosion expert. See the product pages for particular parts for more information regarding what coating systems are recommended or required for use with the parts in question.

4. Hydrogen-Assisted Stress Corrosion Cracking

Some hardened fasteners may experience premature failure from hydrogen-assisted stress-corrosion cracking if exposed to moisture. These fasteners are recommended for use only in dry-service conditions.

Guidelines for Selecting Materials and Coatings

In the discussion and charts of this section, Simpson Strong-Tie presents a system to determine which product coatings and base metals to use in a range of corrosion conditions. These are general guidelines that may not consider all relevant application criteria. Refer to product-specific information for additional guidance.

Simpson Strong-Tie evaluated the AWPA Use Categories (See AWPA U1-16) and ICC-ES AC257 Exposure Conditions and developed a set of corrosion resistance recommendations. These recommendations address the coating systems and materials used by Simpson Strong-Tie for fastener, connector, and anchor products. Although the AWPA Use Categories and ICC-ES AC257 Exposure Conditions specifically address treated-wood applications and some common corrosion agents, Simpson Strong-Tie believes that its recommendations may be applied more generally to other application conditions, insofar as the service environments discussed are similar. You should consult with a corrosion engineer concerning the application where advisable.

Step 1 — Evaluate The Corrosion Conditions

- **Dry Service:** Generally INTERIOR applications including wall and ceiling cavities, raised floor applications in enclosed buildings that have been designed to prevent condensation and exposure to other sources of moisture. Prolonged periods of wetness during construction should also be considered, as this may constitute a Wet Service or Elevated Service condition. Dry Service is typical of AWPA UC1 and UC2 for wood treatment and AC257 Exposure Condition 1. Keep in mind that dry-service environment may contain airborne salts. AC257 Exposure Condition 2 reflects the presence of airborne salt in a dry-service environment and corrosion hazard to exposed metal surfaces. It does not include effects of treatment chemicals. This condition is generally considered in Elevated and Uncertain assessments.
- **Wet Service:** Generally EXTERIOR construction in conditions other than elevated service. These include Exterior Protected and Exposed and General Use Ground Contact as described by AWPA UC4A. The AWPA U1 standard classifies exterior above-ground treatments as Use Categories UC3 (A and B) depending on moisture run-off; and for exterior ground-contact levels of protection, it has Use Categories UC4 (A-C). ICC-ES AC257 considers the exterior exposure to be limited by the presence of treatment chemicals, and corrosion accelerators. In general, the AC257 Exposure Condition 1 includes AWPA Use Categories UC1 (interior/dry) and UC2 (interior/damp), while Exposure Condition 3 is a surrogate to UC3A, 3B, and 4A (exterior, above-ground and ground-contact, general use). The ICC-ES AC257 Exposure Conditions 2 and 4 are exposures that are salt environments.
- **Elevated Service:** Includes fumes, fertilizers, soil, some preservative-treated wood (AWPA UC4B and UC4C), industrial-zone atmospheres, acid rain, salt air, and other corrosive elements.
- **Uncertain:** Unknown exposure, materials, or treatment chemicals.
- **Ocean/Water Front Service:** Marine environments that include airborne chlorides, salt air, and some salt splash. Environments with de-icing salts are included.

Step 2 — Determine Your Corrosion Resistance Classification

Corrosion Resistance Classifications

Environment	Material to Be Fastened						
	Untreated Wood or Other Material	Preservative-Treated Wood					FRT Wood
		SBX-DOT Zinc Borate	Chemical Retention ≤ AWPA, UC4A	Chemical Retention > AWPA, UC4A	ACZA	Other or Uncertain	
Dry Service	Low	Low	Low	High	Medium	High	Medium
Wet Service	Medium	N/A	Medium	High	High	High	High
Elevated Service	High	N/A	Severe	Severe	High	Severe	N/A
Uncertain	High	High	High	Severe	High	Severe	Severe
Ocean/Water Front	Severe	N/A	Severe	Severe	Severe	Severe	N/A

Additional Considerations

1. Always consider the importance of the connection as well as the cost of maintenance and replacement.
2. If the information about treatment chemicals in an application is incomplete, or if there is any uncertainty as to the service environment of any application, Simpson Strong-Tie recommends the use of a Type 300 Series stainless steel. Simpson Strong-Tie has evaluated the corrosion effects of various formulations of wood treatment chemicals ACZA, ACQ, CCA, MCA, CA, and salt as corrosion accelerators. Simpson Strong-Tie has not evaluated all formulations and retentions of the named wood treatment chemicals other than to use coatings and materials in the severe category. Manufacturers may independently provide test results or other product information. Simpson Strong-Tie expresses no opinion regarding such information.
3. Type 316/305/304 stainless-steel products are recommended where preservative-treated wood used in ground contact has a chemical retention level greater than those for AWPA UC4A; CA-C, 0.15 pcf; CA-B, 0.21 pcf; micronized CA-C, 0.14 pcf; micronized CA-B, 0.15 pcf; ACQ-Type D (or C), 0.40 pcf. When wood treated with micronized CA-C and micronized CA-B with treatment retentions up to UC4B is in dry service, hot-dip galvanized fasteners and connectors may be suitable.
4. Mechanical galvanizations C3 and N2000 should not be used in conditions that would be more corrosive than AWPA UC3A (exterior, above ground, rapid water run off).
5. Some chemically treated wood may have chemical retentions greater than specification, particularly near the surface, making it potentially more corrosive than chemically treated wood with lower retentions. If this condition is suspected, use Type 316/305/304 stainless-steel, silicon bronze, or copper fasteners.
6. Some woods, such as cedars, redwood, and oak, contain water-soluble tannins and are susceptible to staining when in contact with metal connectors and fasteners. According to the California Redwood Association (**calredwood.org**), applying a quality finish to all surfaces of the wood prior to installation can help reduce staining.
7. Anchors, fasteners and connectors in contact with FRT lumber shall be hot-dip galvanized or stainless steel, unless recommended otherwise by the FRT manufacturer. Many FRT manufacturers permit low-corrosion-resistant connector and fastener coatings for dry-service conditions.
8. Simpson Strong-Tie does not recommend painting stainless-steel anchors, fasteners or connectors. Imperfections or damage to the paint can facilitate collection of dirt and water that can degrade or block the passive formation of the protective chromium oxide film. When this happens, crevice corrosion can initiate and eventually become visible as a brown stain or red rust. Painting usually does not improve the corrosion resistance of stainless steel.

SIMPSON Strong-Tie®

Step 3 — Match Your Corrosion Resistance Classification to the Coatings and Materials Available

Not all products are available in all finishes. Contact Simpson Strong-Tie for product availability, ordering information and lead times.

Coatings and Materials Available

Level of Corrosion Resistance	Coating or Material	Description	
		Connectors	**Fastener Material or Finish**
Low	**Gray Paint**	Organic paint intended to protect the product while it is warehoused and in transit to the jobsite.	Bright, Hot-Dip Galvanized, Mechanically Galvanized, or Double-Barrier Coating
	Powder Coating	Baked-on paint finish that is more durable than standard paint.	
	Galvanized	Standard (G90) zinc-galvanized coating containing 0.90 oz. of zinc per square foot of surface area (total both sides).	
Medium	ZMAX G185	Galvanized (G185) 1.85 oz. of zinc per square foot of surface area (hot-dip galvanized per ASTM A653) total for both sides. Products with a powder-coat finish over a ZMAX® base have the same level of corrosion resistance.	Hot-Dip Galvanized, Mechanically Galvanized, or Double-Barrier Coating ** Bright fasteners may be used with ZMAX or HDG connectors where low corrosion resistance is allowed.*
	HDG HOT DIP GALVANIZED®	Products are hot-dip galvanized after fabrication (14 ga. and thicker). The coating weight increases with material thickness. The minimum average coating weight is 2.0 oz./ft.^{2} (per ASTM A123) total for both sides. Anchor bolts are hot-dip galvanized per ASTM F2329.	
High/ Severe	316 Stainless Steel **Type 316 Stainless Steel**	Type 316 stainless steel is a nickel-chromium austenitic grade of stainless steel with 2-3% molybdenum. Type 316 stainless steel is not hardened by heat treatment and is inherently nonmagnetic. It provides a level of corrosion protection suitable for severe environments, especially environments with chlorides.	Type 316 Stainless Steel
		Fasteners	**Applicable Products**
Low	**Bright**	No surface coating.	Nails
	Electrocoating (E-Coat™)	Electrocoating utilizes electrical current to deposit the coating material on the fastener. After application, the coating is cured in an oven. Electrocoating provides a minimum amount of corrosion protection and is recommended for dry, low-corrosive applications.	Strong-Drive® SDWF, SDW and SDWV screws
	Clear and Bright Zinc, ASTM F1941	Zinc coatings applied by electrogalvanizing processes to fasteners that are used in dry service and with no environmental or material corrosion hazard.	SD8 Wafer Head Screw, Strong-Drive SDWC TRUSS Screw
Medium	**Zinc Plating with Baked-On Ceramic Coating**	A baked ceramic barrier coating applied over top of electroplated zinc provides increased protection in mildly corrosive environments.	Titen Turbo™ Concrete and Masonry Screw Anchor
	HDG HOT DIP GALVANIZED® **ASTM A153, Class D**	Hot-dip galvanized fasteners ⅜" and smaller in diameter in accordance with ASTM A153, Class D. Hot-dip galvanized fasteners are compliant with the 2015 and 2018 IRC and IBC.	Strong-Drive SCN SMOOTH-SHANK CONNECTOR Nail
	Type 410 Stainless Steel with Protective Top Coat	Carbon martensitic grade of stainless steel that is inherently magnetic, with an added protective top coat. This material can be used in mild atmospheres and many mild chemical environments.	Titen® Stainless-Steel Concrete and Masonry Screw Anchor
	Mechanically Galvanized Coating, ASTM B695, Class 55	Simpson Strong-Tie® Strong-Drive SD Connector screws are manufactured with a mechanically applied zinc coating in accordance with ASTM B695, Class 55, with a supplemental overcoat. These fasteners are compatible with painted and zinc-coated (G90 and ZMAX) connectors and are recognized in evaluation reports that can be found on **strongtie.com**.	Strong-Drive SD CONNECTOR Screw
	Double-Barrier Coating	Simpson Strong-Tie SDS Strong Drive Heavy-Duty Connector screws, Outdoor Accent® structural wood screws, and Outdoor Accent Connector screws are manufactured with a double-barrier coating that provides a level of corrosion protection equaling that provided by HDG coating (ASTM A153, Class D) in most non-marine environments and as described in ICC-ES AC257 Exposures 1 and 3, and are recognized in evaluation reports that can be found on **strongtie.com**.	Strong-Drive SDS HEAVY-DUTY CONNECTOR Screw, Strong-Drive SDWS TIMBER Screw, Outdoor Accents Connector Screw and Structural Wood Screw
High/ Severe	HDG HOT DIP GALVANIZED® **ASTM A153, Class C**	Simpson Strong-Tie Strong-Drive Timber-Hex screws are hot-dip galvanized in accordance with ASTM A153, Class C. These hot-dip galvanized fasteners have a minimum average of 1.25 oz./ft.^{2} of zinc coating and are compliant with the 2015 and 2018 IRC (R317.3) and IBC.	Strong-Drive SDWH TIMBER-HEX HDG Screw
	316 Stainless Steel **Type 316 Stainless Steel**	Type 316 stainless steel is a nickel-chromium austenitic grade of stainless steel with 2-3% molybdenum. It provides a level of corrosion protection suitable for severe environments, especially environments with chlorides. Type 316 stainless-steel fasteners are compliant with the 2015 and 2018 IBC and IRC.	SCNR RING-SHANK CONNECTOR Nail, Strong-Drive SDS CONNECTOR Screw SDWS TIMBER SS Screw

Using This Guide

The High Wind Guide was created to assist designers with selecting the most appropriate connectors for challenging, high wind regions. This guide uses technical data from the *Wood Construction Connectors* catalog to offer design solutions as well as installation details that create a load path resistant to increased uplift and lateral forces common to high wind regions. For ease of use in high wind design, this guide features:

- Organization by framing condition rather than by metal connector group
- Tables feature products listed in order of increasing allowable uplift loads for DF/SP lumber species
- Condition specific installations
- Connections featuring one, two, or even four connectors in some cases
- Connection options specific to high wind regions and not shown in other publications
- Options for additional corrosion resistance indicated in tables
- Details labeled and presented in numerical order to help you more quickly locate the optimal connection for your application

Using the Tables

D
1

Detail illustrations are placed in numerical order for easy identification when referencing connections, and are available to download in DWG, DXF and PDF format from **strongtie.com/hw**.

Model No.: This is the Simpson Strong-Tie product name.

Fasteners: This shows the fastener quantity and type required to achieve the table loads.

Allowable Design Loads: The maximum load that a connection is designed to provide. There may be multiple design loads acting in different directions (uplift and lateral, F_1 or F_2) imposed on a connection.

Uplift

	Model No.	Qty. Req.	No. of Plies (Min.)	Fasteners		Allowable Loads	
				To Girder/Truss	To Wall Framing	DF/SP Uplift (160)	SPF Uplift (160)
	H16	1	1	(2) 0.148" x 1½"	(10) 0.148" x 1½"	1,370	1,180
	LTT20B[2,3,9]	1	2	(10) 0.148" x 3"	(1) ½", ⅝" or ¾" ATR	1,500	1,290
SS	H2.5A	4	2	(20) 0.131" x 1½"	(20) 0.131" x 1½"	1,725[13]	1,410
SS	DTT2Z[2,3,11]	1	1	(8) ¼" x1½" SDS	(1) ½" ATR	1,825	1,800
	LGT2	1	2	(16) 0.148" x 3¼"	(14) 0.148" x 3¼"	2,040	1,755

Qty. Req.: Many tables include quantity of connectors of one, two or even four connectors in some cases.

No. of Plies (Min.): Where applicable, for truss/girder connections, multiple plies will be indicated if required.

Nails: See p. 52 for other fastener sizes and information.

All installations should be designed only in accordance with the allowable load values set forth in this guide.

Products are listed in order of increasing allowable uplift. Allowable load changes greater than 5% from the previous guide are shown in red.

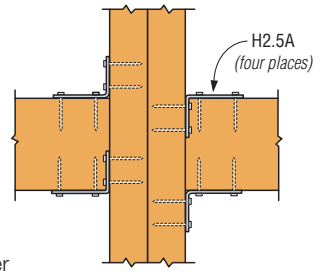

Plan View

Icon Legend

Extra Corrosion Protection

SS

The teal arrow icon identifies products that are available with additional corrosion protection (ZMAX®, hot-dip galvanized or double-barrier coating). The SS teal arrow icon identifies products also available in stainless steel. Other products may also be available with additional protection; contact Simpson Strong-Tie for options. The end of the product name will indicate what type of extra corrosion protection is provided (Z = ZMAX, HDG = hot-dip galvanized or SS = stainless steel). Stainless products may need to be manufactured upon ordering. See pp. 8–10 for information on corrosion, and visit our website **strongtie.com/info** for more technical information on this topic. See p. 52 for more information in stainless steel nail requirements.

Strong-Drive® SD Connector Screw Compatible

SD

This icon identifies products approved for installation with Simpson Strong-Tie® Strong-Drive® SD Connector screw. See **strongtie.com/sd** for more information.

Uplift Load Path

Uplift refers to the forces which can lift a structure. The forces are generated when high winds blow over the top of the structure, creating suction that can lift the roof. These uplift forces must be transferred down to the foundation to prevent damage. Several connections are required to create a continuous load path.

Although homes are built from the bottom up, they are designed from the top down. Product and load selection for the roof, for example, will affect the products and loads for the rest of the house. The tables in this application guide also begin at the top of the structure and continue to the foundation. A series of connectors in this guide must be used to complete the uplift and lateral load paths.

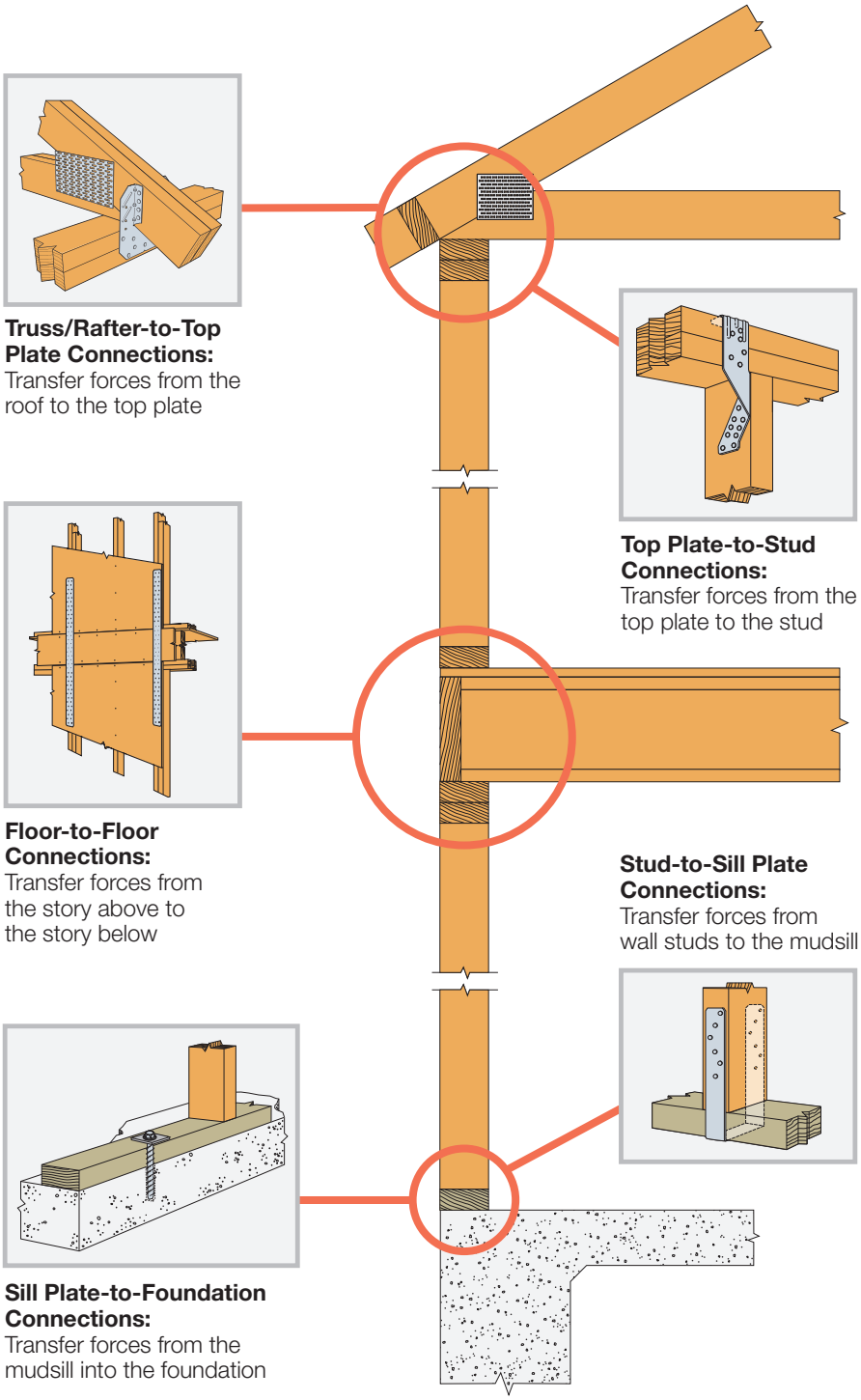

Truss/Rafter-to-Top Plate Connections:
Transfer forces from the roof to the top plate

Top Plate-to-Stud Connections:
Transfer forces from the top plate to the stud

Floor-to-Floor Connections:
Transfer forces from the story above to the story below

Stud-to-Sill Plate Connections:
Transfer forces from wall studs to the mudsill

Sill Plate-to-Foundation Connections:
Transfer forces from the mudsill into the foundation

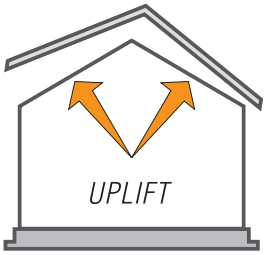

When wind flows over the roof of the structure, creating a strong lifting force on the roof that can cause it to break away.

Lateral Load Path

Wind not only affects a structure with uplift forces, it also imposes shear forces that can make a structure slide, overturn or rack. Additional steps must be taken to resist these loads and ensure that the structure will remain strong. This is done by adding bracing, connectors and shearwalls.

Large openings along wall lines (such as windows and doors) create structural challenges in resisting these lateral loads. This is especially true at garage fronts. Such openings often do not leave a large enough wall section to provide sufficient strength. These applications will require the use of prefabricated panels to meet the load requirements.

Uplift/Lateral Connectors:
Resist overturning and shear forces

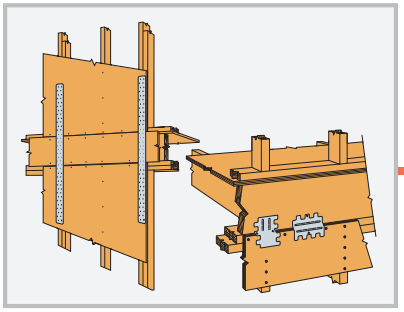

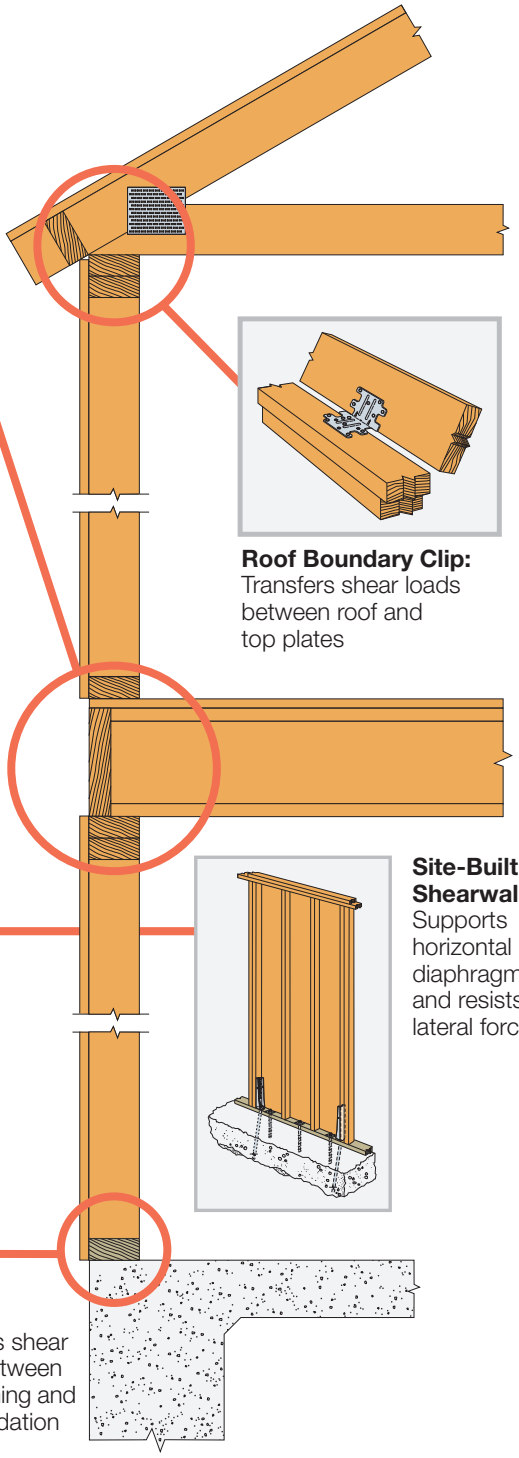

Roof Boundary Clip:
Transfers shear loads between roof and top plates

Prefabricated Shearwall:
An alternative to site-built shearwalls when wall space is limited

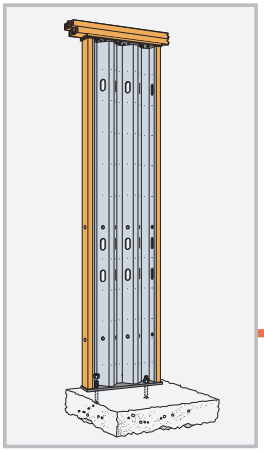

Site-Built Shearwall:
Supports horizontal diaphragms and resists lateral forces

Holdown Anchor:
Anchors shearwall ends to framing or foundation below

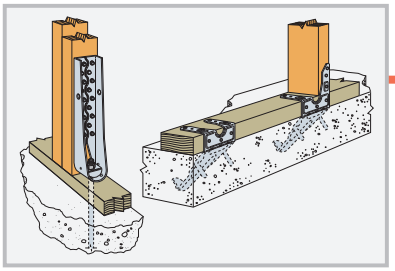

Mudsill Anchor:
Transfers shear loads between wall framing and the foundation

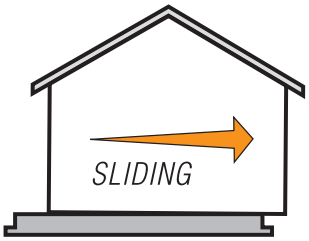

When wind blows against the side of the structure, exerting a lateral force that causes the structure to slide off its foundation.

When the structure is anchored in place to limit racking or sliding, the lateral force of the wind causes the structure to rotate or overturn.

When wind blows against the side of the structure, exerting a lateral force that causes it to lean over (rack) to one side.

Truss/Rafter to Wood Double Top Plates

SS SD For details about these icons, see p. 11.

	Model No.	Qty. Req.[10]	Fasteners (Total)		DF/SP Allowable Loads			SPF Allowable Loads		
			To Truss/Rafter	To Plates	Uplift (160)	Parallel to Plate (F_1) (160)	Perp. to Plate (F_2) (160)	Uplift (160)	Parallel to Plate (F_1) (160)	Perp. to Plate (F_2) (160)
	H2.5T	1	(5) 0.131" x 1½"	(5) 0.131" x 1½"	420	135	145	420	135	145
SS	H2.5ASS[11]	1	(5) 0.131" x 2½"	(5) 0.131" x 2½"	440	75	70	380	75	70
	H1	1	(6) 0.131" x 1½"	(4) 0.131" x 2½"	480	510	190	425	440	165
	H2.5T	1	(5) 0.131" x 2½"	(5) 0.131" x 2½"	590	135	145	565	135	145
	H2.5A	1	(5) 0.131" x 1½"	(5) 0.131" x 1½"	635[2]	110	110	540	110	110
	HGA10KT	1	(4) ¼" x 1½" SDS	(4) ¼" x 3" SDS	650	1,165	940	500	840	675
	LTS12[13]	1	(6) 0.148" x 1½"	(6) 0.148" x 1½"	660[2]	75[5]	125[5]	555	75[5]	125[5]
	H2.5A	1	(5) 0.131" x 2½"	(5) 0.131" x 2½"	730[2]	110	110	615	110	110
	TSP[9]	1	(9) 0.148" x 1½"	(6) 0.148" x 1½"	755	310	190	650	265	160
SS	H8	1	(5) 0.148" x 1½"	(5) 0.148" x 1½"	780	95	90	710	95	90
	SDWC15600[12]	1	—	—	805[2]	380[2]	225	505	265	190
	H11Z	1	(6) 0.162" x 2½"	(6) 0.162" x 2½"	830	525	760	715	450	655
	H10A Sloped	1	(9) 0.148" x 1½"	(9) 0.148" x 1½"	855	590	285	760	505	285
	H1	2	(12) 0.131" x 1½"	(8) 0.131" x 2½"	960	1,020	380	850	880	330
	H10ASS[11]	1	(9) 0.148" x 1½"	(9) 0.148" x 1½"	970	565	170	835	485	170
SS	MTS12[13]	1	(7) 0.148" x 1½"	(7) 0.148" x 1½"	990	75[5]	125[5]	850	75[5]	125[5]
	H2.5T	2	(10) 0.131" x 2½"	(10) 0.131" x 2½"	990	270	290	990	270	290
	TSP[9]	1	(9) 0.148" x 1½"	(6) 0.148" x 3"	1,015	310	190	875	265	160
	H10AR	1	(9) 0.148" x 1½"	(9) 0.148" x 1½"	1,050	490	285	905	420	285
	H10A-2	1	(9) 0.148" x 1½"	(9) 0.148" x 1½"	1,080	680	260	930	585	225
	H10A	1	(9) 0.148" x 1½"	(9) 0.148" x 1½"	1,105[2]	565	285	1,015	485	285
	H2.5T	2	(10) 0.131" x 2½"	(10) 0.131" x 2½"	1,180	270	290	1,130	270	290
	SDWC15600[12]	2	—	—	1,200	685	995	1,045	495	670
	H2.5A	2	(10) 0.131" x 1½"	(10) 0.131" x 1½"	1,270[2]	220	220	1,080	220	220
	H14	1	(12) 0.131" x 1½"	(13) 0.131" x 2½"	1,275	725	285	1,050	480	245
	HTS16[13]	1	(12) 0.148" x 1½"	(12) 0.148" x 1½"	1,310	75[5]	125[5]	1,125	75[5]	125[5]
SS	LTS12[13]	2	(12) 0.148" x 1½"	(12) 0.148" x 1½"	1,320[2]	150[5]	250[5]	1,110	150[5]	250[5]
	H16	1	(2) 0.148" x 1½"	(10) 0.148" x 1½"	1,370	—	—	1,180	—	—
	H2.5A	2	(10) 0.131" x 2½"	(10) 0.131" x 2½"	1,460[2]	220	220	1,230	220	220
SS	MTS12[13]	2	(14) 0.148" x 1½"	(14) 0.148" x 1½"	1,980	150[5]	250[5]	1,700	150[5]	250[5]

1. For connections to single top plates, see p. 25.
2. Where noted, allowable uplift loads in table are for SP. For DF, H10A = 1,040 lb. (160), SDWC15600 = 715 lb. (160), LTS12 = 645 lb. (160), LTS12 (qty. 2) = 1,290 lb. (160), H2.5A with 0.131" x 1½" nails = 625 lb. (160) and H2.5A (qty. 2) = 1,250 lb. (160), H2.5A with 0.131" x 2½" nails = 700 lb. (160) and H2.5A (qty.2) = 1,400 lb. (160). For DF, SDWC15600 lateral F_1 is 270 lb. (160).
3. H16 factory sloped to 5:12, but 3:12–7:12 roof slope 5:12, but 3:12–7:12 roof slope is acceptable.
4. Hurricane ties are shown installed on the outside of the wall for clarity and assume a minimum overhang of 3½". Installation on the inside of the wall is acceptable. For uplift Continuous Load Path, connections in the same area (i.e., truss-to-plate connector and plate-to-stud connector) must be on same side of the wall.
5. When installing LTS, MTS and HTS connectors, the following installation instructions are required for the lateral loads to apply: the first 7 nail holes after the bend area must be filled with 0.148" x 1½" nails. This applies to straps on either side of bend area. All additional fasteners may be installed in any remaining strap holes. Twist straps do not have to be wrapped over the truss to achieve the load.
6. Refer to p. 49 for installation details of two connectors on a single truss.
7. Allowable loads in the F_1 direction are not intended to replace diaphragm boundary members or prevent cross-grain bending of the truss or rafter members.
8. For simultaneous loads in more than one direction, the connector must be evaluated as described in Note 7, p. 7 under General Notes.
9. If installed on outside of wall, TSP must be installed to either a min. 2x6 top chord/rafter, or 2x4 at 9:12 pitch.
10. Installations using multiple connectors are limited to specific table references.
11. The load capacities of stainless-steel connectors match those of carbon-steel connectors when installed with Simpson Strong-Tie® stainless-steel, ring-shank nails.
12. Allowable load for one- or two-screw installations is dependent upon installation configuration. See pp. 56–58 for required installation angles, spacing requirements and other installation information.
13. Longer twist straps may be used to achieve same loads where framing dictates it is necessary.

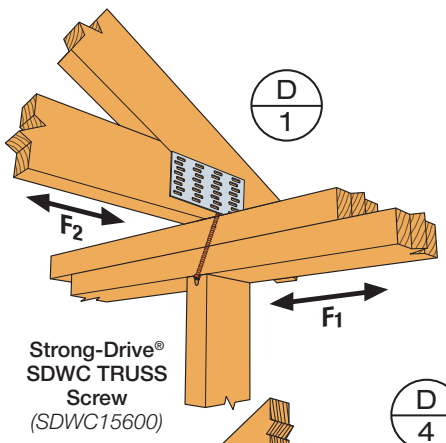

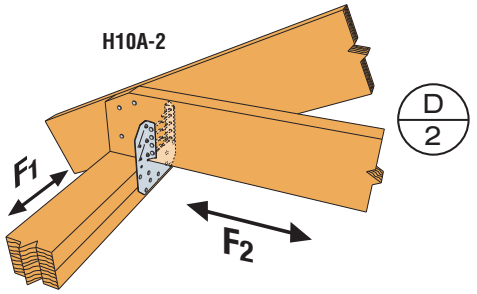

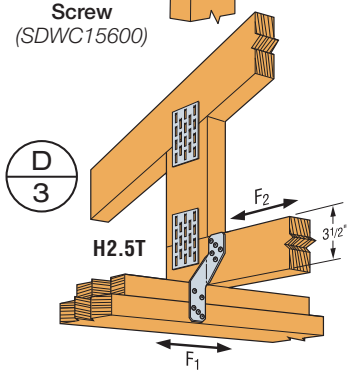

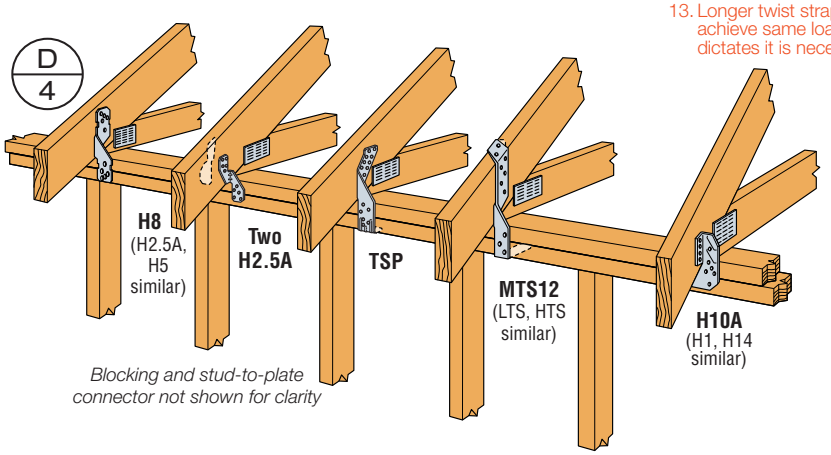

Girder/Truss to Wood Wall Framing

SS SD For details about these icons, see p. 11.

Model No.	Qty. Req.	No. of Plies (Min.)	Fasteners		Allowable Loads	
			To Girder/Truss	To Wall Framing	DF/SP Uplift (160)	SPF Uplift (160)
H16-2[6]	1	2	(2) 0.148" x 1½"	(10) 0.148" x 1½"	1,370	1,180
LTT20B[2,9]	1	2	(10) 0.148" x 3"	(1) ½", ⅝" or ¾" ATR	1,500	1,290
SS H2.5A	4	2	(20) 0.131" x 1½"	(20) 0.131" x 1½"	1,725[13]	1,410
SS DTT2Z[2,11]	1	1	(8) ¼" x 1½" SDS	(1) ½" ATR	1,825	1,800
LGT2	1	2	(16) 0.148" x 3¼"	(14) 0.148" x 3¼"	2,040	1,755
THA222-2[1]	1	2	(6) 0.148" x 1½"	(20) 0.148" x 3"	2,485	2,410
HTT4[2]	1	2	(12) 0.162" x 2½"	(1) ⅝" ATR	2,695	2,315
HDU2-SDS2.5[2]	1	2	(6) ¼" x 2½" SDS	(1) ⅝" ATR	3,075	2,215
MGT[2]	1	1	(22) 0.148" x 1½"	(1) ⅝" ATR	3,275[13]	2,720
LGT3-SDS2.5	1	3	(12) ¼" x 3" SDS	(26) 0.148" x 3¼"	3,480	2,505
HTT4[2]	1	2	(18) 0.148" x 1½"	(1) ⅝" ATR	3,610	3,105
MGT[2]	1	2	(22) 0.148" x 3"	(1) ⅝" ATR	3,965	3,330
LGT4-SDS3	1	4	(16) ¼" x 3" SDS	(30) 0.148" x 3¼"	4,060	2,920
HTT4[2]	1	1[8], 2	(18) #10 x 1½" SD	(1) ⅝" ATR	4,455	3,830
HTT5[2]	1	2	(20) 0.162" x 2½"	(1) ⅝" ATR	4,545	3,910
HDU4-SDS2.5[2]	1	2	(10) ¼" x 2½" SDS	(1) ⅝" ATR	4,565	3,285
VGT[2]	1	2	(16) ¼" x 3" SDS	(1) ⅝" ATR	4,940	3,555
HTT5[2]	1	2	(26) 0.162" x 2½"	(1) ⅝" ATR	5,090	4,375
CS16	3	3	(36) 0.148" x 2½"	(36) 0.148" x 2½"	5,115	5,115
HTT5KT[2]	1	2	(26) #10 x 2½" SD	(1) ⅝" ATR	5,445	5,360
HDU5-SDS2.5[2]	1	2	(14) ¼" x 2½" SDS	(1) ⅝" ATR	5,645	4,340
HDU2-SDS2.5[2]	2	2	(12) ¼" x 2½" SDS	(1) ⅝" ATR	6,150	4,430
VGT[2]	2	2	(32) ¼" x 3" SDS	(2) ⅝" ATR	7,185	5,170
HTT5[2]	2	2	(52) 0.148" x 1½"	(1) ⅝" ATR	8,700	7,480
VGT[2]	2	3	(32) ¼" x 3" SDS	(2) ⅝" ATR	8,890	6,400
HGT-2[2]	1	2	(16) 0.148" x 3"	(2) ⅝" ATR	10,345	6,485
HGT-3[2]	1	3	(16) 0.148" x 3"	(2) ⅝" ATR	10,440	9,035
HGT-4[2]	1	4	(16) 0.148" x 3"	(2) ⅝" ATR	11,395	9,250

1. Parallel to Plate — THA222-2 is 350 lb. Perpendicular to Plate — THA222-2 is 280 lb.
2. Rod must connect directly to foundation or to adequately sized connectors to framing below as determined by the designer.
3. ATR — All-Thread Rod.
4. For multiple holdowns, verify the allowable tension capacity of the wood member.
5. Where noted, 0.148" x 1½" nails may be substituted for same load.
6. H16-2/H16-2S factory sloped to 5:12, but 3:12–7:12 roof slope is acceptable.
7. LGT4 — Uplift for DF/SP girder and SPF studs is 3,860 lb.
8. HTT4 — Tabulated loads are based on a min. nominal 2x6 framing member.
9. A standard cut washer is required under anchor nut for LTT20B when using ½" or ⅝" anchor bolts. No additional washer is required when using a ¾" anchor bolt.
10. LGT2 — F_1: 700 lb.; F_2: 170 lb.
    LGT3 — F_1: 795 lb.; F_2: 385 lb.
    LGT4 — F_1: 2,000 lb.; F_2: 675 lb.
    MGT — F_1: 775 lb.; F_2: 525 lb.
    VGT — F_1: 1,185 lb.; F_2: 590 lb.
    LGT2 and LGT4 require 4- and 7-0.162" x 3½" sinkers, respectively, in optional nail holes.
11. For stainless steel, order DTT2SS.
12. Installations using multiple connectors are limited to specific table references.
13. Where noted, allowable uplift loads in table are for SP. For DF, MGT = 3,165 lb. (160) and for (4) H2.5A =1,635 lb. (160).

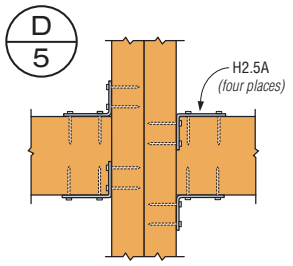

Plan View

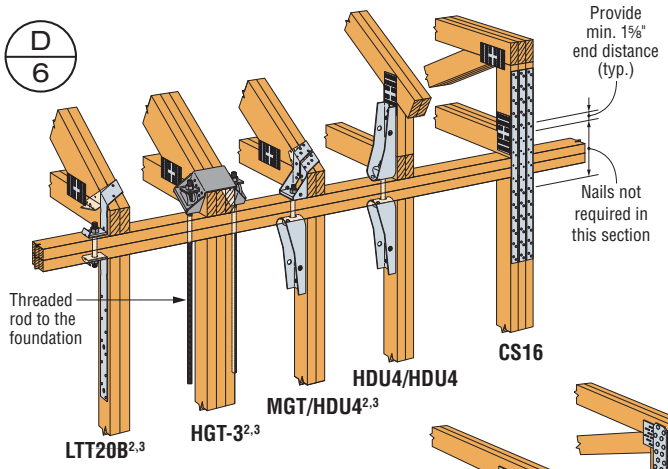

HGT Installed on Wood
Use ⅝" threaded rod, and two Simpson Strong-Tie® LBP ⅝" washers (not included) on top of each crescent washer (total of four LBP ⅝" washers)

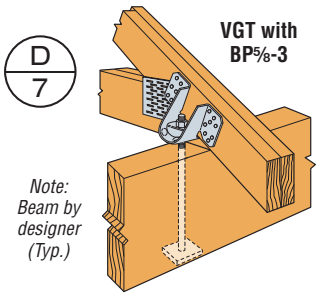

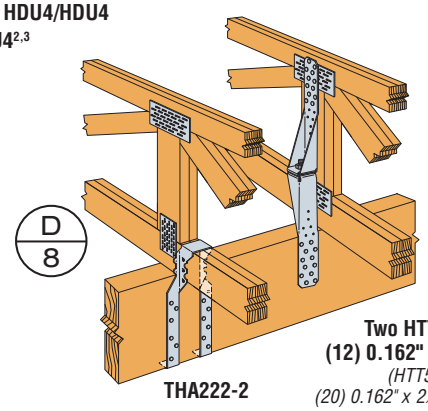

Two HTT4 with (12) 0.162" x 2½" Nails
(HTT5 with (20) 0.162" x 2½" nails similar)

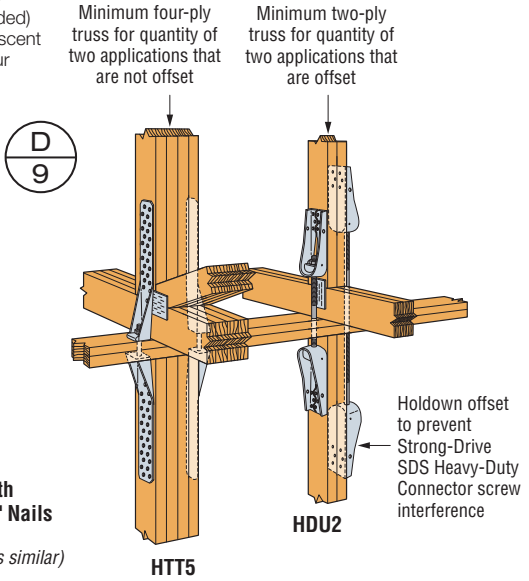

I-Joists to Wall Framing

SS SD For details about these icons, see p. 11.

Model No.	Fasteners		DF/SP Allowable Loads			SPF Allowable Loads		
	To Rafters	To Plates	Uplift (160)	Lateral (160) Parallel to Plate (F_1)	Lateral (160) Perpendicular to Plate (F_2)	Uplift (160)	Lateral (160) Parallel to Plate (F_1)	Lateral (160) Perpendicular to Plate (F_2)
SS H8	(5) 0.148" x 1½"	(5) 0.148" x 1½"	780	95	90	710	95	90
SS MTS20[1]	(7) 0.148" x 1½"	(7) 0.148" x 1½"	990	75	125	850	75	125
MTS30[1]	(7) 0.148" x 1½"	(7) 0.148" x 1½"	990	75	125	850	75	125
SS HTSQ16ZKT[9]	(4) ¼" x 1½" SDS	(4) ¼" x 1½" SDS	1,145	75	125	800	75	125
HTS20[1]	(8) 0.148" x 1½"	(8) 0.148" x 1½"	1,445[10]	75	125	1,215	75	125
HTS30[1]	(8) 0.148" x 1½"	(8) 0.148" x 1½"	1,445[10]	75	125	1,215	75	125

1. Additional fastener holes are provided on these products. Not all holes are required to be filled to achieve listed loads.
2. Consult I-joist manufacturer for blocking details and uplift limits on joist end application.
3. Connectors may be reversed as long as the required fasteners are installed on either side of the connection.
4. Web stiffener required on both sides to achieve published uplift loads.
5. When installing MTS and HTS connectors, the following installation instructions are required for the lateral loads to apply. The first seven nail holes after the bend area must be filled with 0.148" x 1½" nails. This applies to straps on either side of bend area. All additional fasteners may be installed in any remaining strap holes.
6. Allowable loads in the F_1 direction are not intended to replace diaphragm boundary members or prevent cross grain bending of the truss or rafter members.
7. For simultaneous loads in more than one direction, the connector must be evaluated as described in Note 7, p. 7 under General Notes.
8. MTS and HTS may be ordered with a reversed bend configuration; add (-REV) suffix to model number(s).
9. HTSQ16ZKT comes with (8) ¼" x 1½" Strong-Drive® SDS Heavy-Duty Connector screws. May be ordered in stainless steel: HTSQ16SS-SDS. 20" length also available.
10. Where noted, allowable uplift loads in table are for SP. For DF, HTS20 and HTS30 = 1,415 lb. (160).

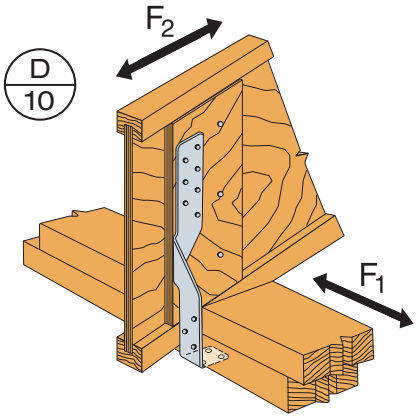

MTS Installation As an I-Joist to Top Plate Tie

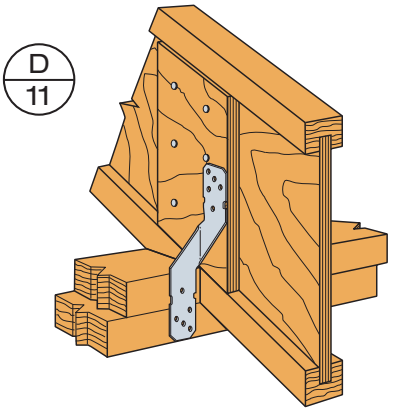

Typical H8 Installation
(I-Joist to Top Plate)

Note:
Web stiffeners required on both sides of I-joist

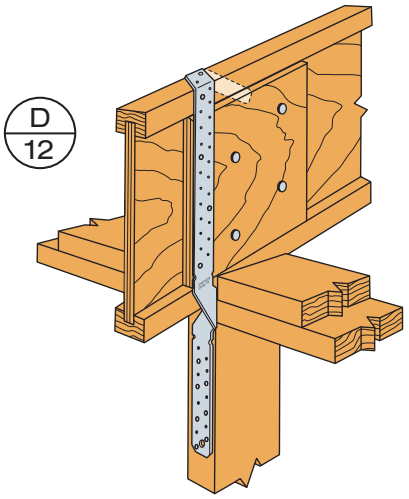

MTS30 to Studwall Installation

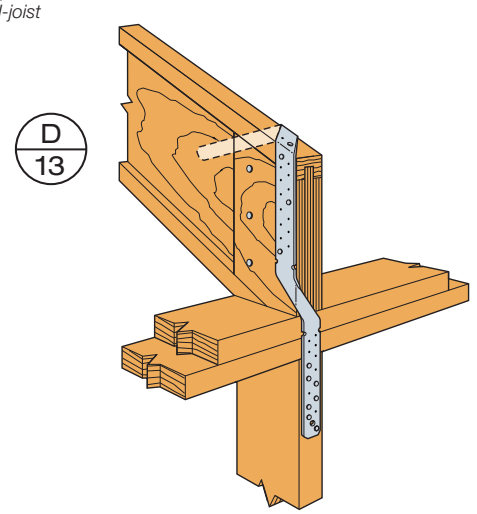

MTS30 to Studwall Installation

I-Joists to Masonry/Concrete

SS For details about these icons, see p. 11.

Model No.	Fasteners		DF/SP Allowable Loads		
	To I-Joist	To Grouted CMU or Bond Beam	Uplift	Lateral	
			(160)	Parallel to Plate (F_1)	Perpendicular to Plate (F_2)
MTSM16	(7) 0.148" x 1½"	(4) ¼" x 2¼" Titen Turbo™[5]	830	120[4]	90[4]
MTSM20	(7) 0.148" x 1½"	(4) ¼" x 2¼" Titen Turbo[5]	830	120[4]	90[4]
HTSM16	(8) 0.148" x 1½"	(4) ¼" x 2¼" Titen Turbo[5]	1,110	120[4]	90[4]
HTSM20	(10) 0.148" x 1½"	(4) ¼" x 2¼" Titen Turbo[5]	1,110	120[4]	90[4]
META20	(8) 0.148" x 1½"	Embed 4"	1,450	340	770
SS HETA20	(9) 0.148" x 1½"	Embed 4"	1,810	340	770
HETA40	(9) 0.148" x 1½"	Embed 4"	1,810	340	770

1. Additional fastener holes are provided on these products. Not all holes are required to be filled to achieve listed loads.
2. Consult I-joist manufacturer for blocking details and uplift limits on joist end application.
3. Web stiffener required on both sides to achieve published uplift loads.
4. When installing MTSM and HTSM connectors, the following installation instructions are required for lateral loads to apply:
   a) The first four holes for Titen Turbo screws after the bend area must be filled on the concrete/masonry end of the connection.
   b) The first seven nail holes after the bend area must be filled with 0.148" x 1½" nails on the wood end of the connection. Any additional required nails may be placed in any open hole on the wood end of the strap.
5. Hex-head model required. For concrete applications, use ¼" x 1¾" Titen Turbo screw anchors. Titen 2 may be substituted for Titen Turbo. See p. 64 for important information.
6. Allowable loads in the F_1 direction are not intended to replace diaphragm boundary members or prevent cross grain bending of the truss or rafter members.
7. For simultaneous loads in more than one direction, the connector must be evaluated as described in Note 7, p. 7 under General Notes.

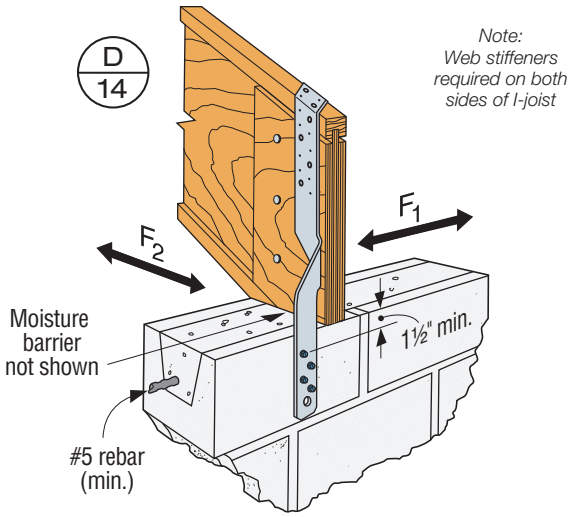

MTSM20 Fastened Directly to CMU, Bond Beam or Concrete Tie Beam

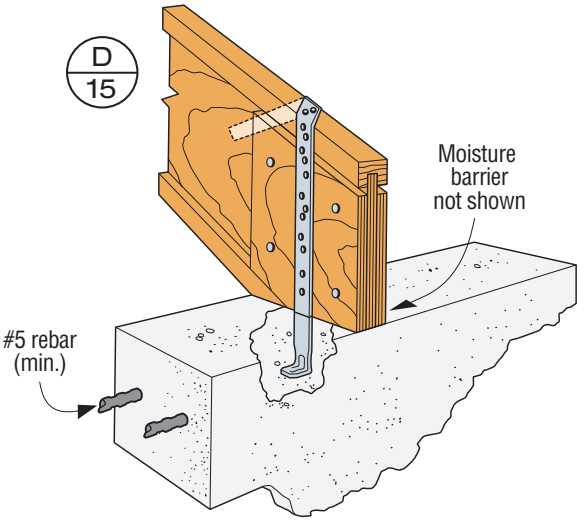

META/HETA Installation into CMU, Bond Beam or Concrete Tie Beam

Embedded Truss/Rafter to Masonry/Concrete

SS SD For details about these icons, see p. 11.

Model No.	Qty. Req.	Application	One-Ply SP Rafter/Truss				Two- or Three-Ply SP Rafter/Truss			
			Fasteners to Rafter/Truss (Total)[4]	Uplift (160)	F_1 (160)	F_2 (160)	Fasteners to Rafter/Truss (Total)[4]	Uplift (160)	F_1 (160)	F_2 (160)
HETAL12	1	Block/Concrete	(10) 0.148" x 1½"	1,040	390[7]	1,040	(10) 0.162" x 3½"	1,235	390[7]	1,040
META12	1	Block/Concrete	(7) 0.148" x 1½"	1,420	340	770	(6) 0.162" x 3½"	1,450	340	770
(META20 Only) META16, META18, META20, META24, META40	1	Block/Concrete	(8) 0.148" x 1½"	1,450	340	770	(6) 0.162" x 3½"	1,450	340	770
HETA12	1	Block/Concrete	(7) 0.148" x 1½"	1,455	340	770	(7) 0.162" x 3½"	1,730	340	770
SS (HETA20 Only) HETA16, HETA20, HETA24, HETA40	1	Block/Concrete	(9) 0.148" x 1½"	1,810	340	770	(8) 0.162" x 3½"	1,810	340	770
(HETAL20 Only) HETAL16 HETAL20	1	Block/Concrete	(14) 0.148" x 1½"	1,810	390[7]	1,040	(13) 0.162" x 3½"	1,810	390[7]	1,040
(META20 Only) META12, META16, META18, META20, META24, META40	2[10]	Block	(10) 0.148" x 1½"[12]	1,875	680	770	(14) 0.162" x 3½"	1,795	1,285	1,080
		Concrete						2,435		
SS (HETA20 Only) HETA12, HETA16, HETA20, HETA24, HETA40	2[10]	Block	(10) 0.148" x 1½"[12]	1,920	680	770	(12) 0.162" x 3½"	2,365	1,350	1,430
		Concrete						2,560		
HHETA16, HHETA20, HHETA24, HHETA40	2[10]	Block	(10) 0.148" x 1½"[12]	1,920	680	770	(12) 0.162" x 3½"	2,365	1,350	1,430
		Concrete						3,180		
HHETA16, HHETA20, HHETA24, HHETA40	1	Block/Concrete	(10) 0.148" x 1½"	2,120	340[8]	770	(9) 0.162" x 3½"	2,120	340[8]	770
DETAL20	1	Block/Concrete	(18) 0.148" x 1½"[10]	2,480	2,000	1,370	—	—	—	—

1. For SPF trusses multiply table loads by 0.78 for uplift and F_2 directions (use F_1 values as shown).
2. Unless noted otherwise, embedment is into either grout filled block (f'_m = 1,500 psi) or concrete (minimum f'_c is 2,000 psi for single strap installations and 2,500 psi for double strap installations).
3. Minimum edge distance for META/HETA/HHETA is 1½" for concrete and 2" for masonry. Where edge distance is less than 2" for masonry, the maximum uplift load is 1,005 lb.
4. Single-ply trusses may use either 0.148" x 1½" or 0.162" x 3½" nails with allowable loads as noted in table. Two- or three-ply trusses shall use 0.162" x 3½" nails.
5. For simultaneous loads in more than one direction, the connector must be evaluated as described in Note 7, p. 7 under General Notes.
6. Allowable loads in the F_1 direction are not intended to replace diaphragm boundary members or prevent cross grain bending of the truss or rafter members.
7. Allowable F_1 load towards face of HETAL is 1,870 lb.
8. The HHETA allowable F_1 load can be increased to 435 lb. if the strap is wrapped over the truss and a minimum of twelve nails are installed.
9. The DETAL20 requires six nails installed in the truss seat and six nails in each strap. The HETAL requires five nails installed in the truss seat. For double META/HETA/HHETA installations, install half of the required fasteners in each strap.
10. Double META, HETA, and HHETA are spaced at 1⅝" for single-ply and 3⅛" for two-ply and staggered as shown. Install with spoons facing outward.
11. Two HHETA anchors may be installed in a concrete tie beam on a two- or three-ply truss with two fewer nails for an allowable uplift load of 3,050 lb.
12. Straps do not need to be wrapped over the rafter/truss to achieve the tabulated loads, unless noted otherwise.
13. It is acceptable to use a reduced number of fasteners provided that there is a reduction in allowable uplift load. Lateral loads require the lowest six nail holes filled for META, lowest seven nail holes filled for HETA/HHETA, all five nail holes in the truss seat for HETAL, and all six nail holes in the truss seat for DETAL. Calculate the connector uplift value for a reduced number of fasteners as follows:

$$\text{Allowable Load} = \frac{\text{No. of Nails Used}}{\text{No. of Nails in Table}} \times \text{Table Load}$$

Example: META20 in SP with (6) 0.148" x 1½" nails total (160)

$$\text{Allowable Load} = \frac{\text{6 Nails (Used)}}{\text{8 Nails (Table)}} \times 1{,}450 \times \tfrac{6}{8} = 1{,}088 \text{ lb.}$$

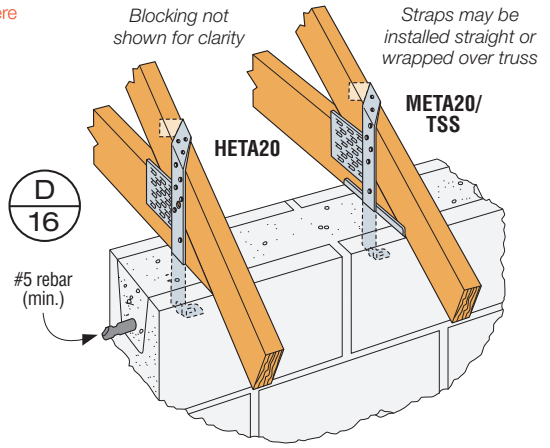

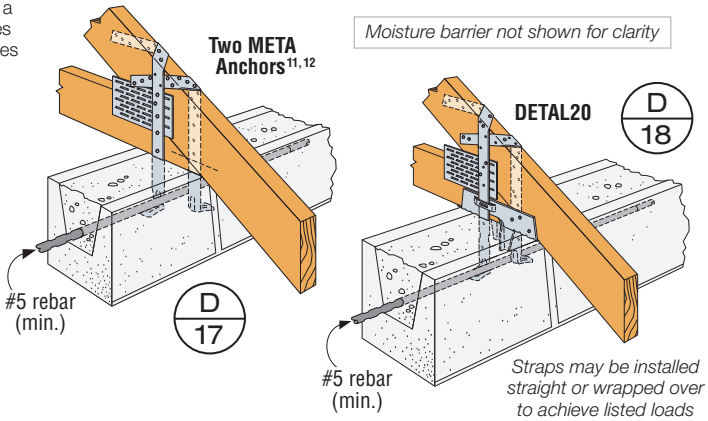

Post-Installed Truss/Rafter to Masonry/Concrete

SS For details about this icon, see p. 11.

Model No.	Qty. Req.	Fasteners to Masonry	Uplift One-Ply Truss		Uplift Two-Ply Truss		Lateral Load	
			Fasteners to Truss/Rafter (Total)	DF/SP Uplift (160)	Fasteners to Truss/Rafter (Total)	DF/SP Uplift (160)	Parallel to Plate (F_1)	Perpendicular to Plate (F_2)
HM9KT	1	(5) ¼" x 2¼" Titen Turbo™[4]	(4) ¼" x 1½" SDS	760	N/A	N/A	670	190
HGAM10KTA	1	(4) ¼" x 2¾" Titen Turbo[4]	(4) ¼" x 1½" SDS	810	(4) ¼" x 1½" SDS	810	875	1,105
MTSM16, MTSM20	1	(4) ¼" x 2¼" Titen Turbo[4]	(7) 0.148" x 1½"	830	(7) 0.148" x 1½"	830	120[6]	90[6]
H10S	1	(2) ⅜" x 4" Titen HD®	(8) 0.131" x 1½"	910	N/A	N/A	—	—
HTSM16, HTSM20	1	(4) ¼" x 2¼" Titen Turbo[4]	(8) 0.148" x1½"	1,110	(8) 0.148" x 1½"	1,110	120[6]	90[6]
LTT20B[2]	1	(1) ½", ⅝", ¾" ATR[11]	(10) 0.148" x 1½"	1,355	(10) 0.148" x 3"	1,500	—	—
H16[5]	1	(6) ¼" x 2¼" Titen Turbo[4]	(2) 0.148" x 1½"	1,370	N/A	N/A	—	—
MTSM16, MTSM20	2	(8) ¼" x 2¼" Titen Turbo[4]	(14) 0.148" x 1½"	1,440[12]	(14) 0.148" x 1½"	1,440[12]	240[6]	180[6]
HTSM16, HTSM20	2	(8) ¼" x 2¼" Titen Turbo[4]	(16) 0.148" x 1½"	1,900[12]	(16) 0.148" x 1½"	1,900[12]	240[6]	180[6]
SS DTT2Z[13,14]	1	(1) ½" ATR	(8) ¼" x 1½" SDS	1,825	(8) ¼" x 1½" SDS	2,145	—	—
LGT2[3]	1	(7) ¼" x 2¼" Titen Turbo[4]	(16) 0.148" x 3¼"[3]	2,030	(16) 0.148" x 3¼"	2,030	700	170
FGTR[7,8,9,10]	1	(2) ½" x 5" Titen HD	(18) ¼" x 3" SDS[3]	4,725	(18) ¼" x 3" SDS	4,725	—	—

1. For SPF trusses multiply table uplift and F_2 loads by 0.86 for nailed applications and 0.72 for Simpson Strong-Tie® Strong-Drive® SDS Heavy-Duty Connector screws for uplift and F_2 directions (use F_1 values as shown). Higher loads may be possible (contact Simpson Strong-Tie).
2. Add a standard cut washer to seat of LTT20B when ½" or ⅝" diameter anchor bolt is used.
3. Product may be used for a single-ply truss provided the truss is blocked to receive 3" Simpson Strong-Tie Strong-Drive SDS Heavy-Duty Connector screws or 0.148" x 3¼" nails and blocking is attached to the truss to act as a single unit.
4. Hex-head model required. For concrete applications, use ¼" x 1¾" Titen Turbo screw anchors. Titen 2 may be substituted for Titen Turbo. See p. 64 for important information. (sold separately)
5. H16 factory sloped to 5:12, but 3:12–7:12 roof slope is acceptable.
6. When installing MTSM and HTSM connectors, the following installation instructions are required for lateral loads to apply:
   a) The first four holes for Titen Turbo screw anchor after the bend area must be filled on the concrete/masonry end of the connection.
   b) The first seven nail holes after the bend area must be filled with 0.148" x 1½" nails on the wood end of the connection. Any additional required nails may be placed in any open hole on the wood end of the strap.
7. To achieve the published loads, the FGTR must be attached to a grouted and reinforced block wall or reinforced concrete wall designed by others to transfer the uplift loads to the foundation.
8. FGTR installed between 4" and 16" from the end of a wall will have an allowable load of 4,685 lb.
9. FGTR is packaged with Simpson Strong-Tie Strong-Drive SDS Heavy-Duty Connector screws and Titen HD screw anchors.
10. FGTR can be installed on roof pitches up to 8:12 or on a bottom chord designed to transfer the loads.
11. ATR — All-Thread Rod or Anchor Bolt.
12. MTSM/HTSM connectors shall be installed on opposite faces of masonry/concrete to achieve loads listed for two connectors. If installed on same face of masonry/concrete, maximum uplift is 1,340 lb.
13. For stainless steel, order DTT2SS.
14. DTT2 is 6 15/16" tall. Truss heel height or rafter vertical depth must accommodate.

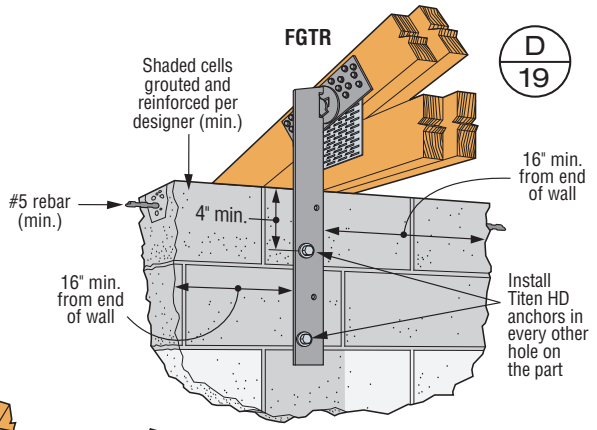

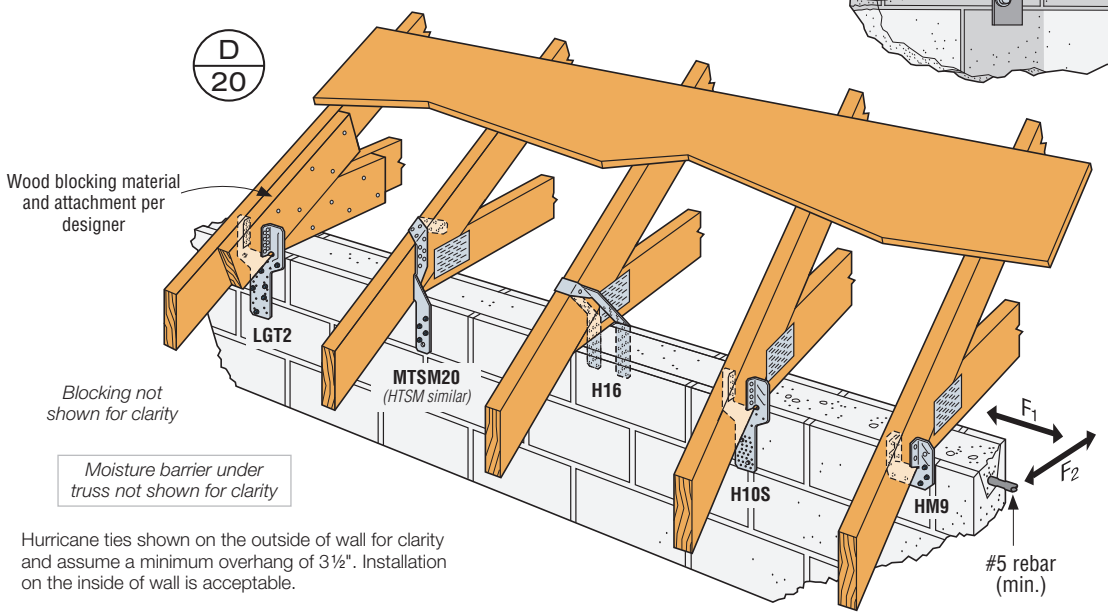

Hurricane ties shown on the outside of wall for clarity and assume a minimum overhang of 3½". Installation on the inside of wall is acceptable.

Girder/Truss to Masonry/Concrete

SS SD For details about these icons, see p. 11.

Model No.	Qty. Req.[3]	No. of Plies	Fasteners		DF/SP Uplift	SPF Uplift
			To Girder/Truss	To Masonry/Concrete	(160)	(160)
LTA2 Perpendicular-to-Wall Installation	1	1	(10) 0.148" x 1½"	Embedded	1,350[12]	990
LTA2 Parallel-to-Wall Installation	1	1	(10) 0.148" x 1½"	Embedded	1,390[12]	990
SS DTT2Z	1	1	(8) ¼" x 1½" SDS	(1) ½" ATR	1,825	1,800
LGT2	1	2	(16) 0.148" x 3¼"	(7) ¼" x 2¼" Titen Turbo™[7]	2,030	1,750
SS DTT2Z	1	2	(8) ¼" x 1½" SDS	(1) ½" ATR	2,145	1,835
THA222-2	1	2	(6) 0.162" x 2½"	(14) 3⁄16" x 2¼" Titen Turbo[7]	2,150	1,850
VGT L/R	1	2	(16) ¼" x 3" SDS	(1) ⅝" ATR	2,225	1,600
PA28[5]	1	2	(20) 0.162" x 3½"	Embed 4"	2,615	2,250
HDU2-SDS2.5	1	2	(6) ¼" x 2½" SDS	(1) ⅝" ATR	3,075	2,215
MGT	1	1	(22) 0.148" x 1½"	(1) ⅝" ATR	3,275[13]	2,720
LGT3-SDS2.5	1	3	(12) ¼" x 2½" SDS	(4) ⅜" x 5" Titen HD®	3,285	2,365
LGT4-SDS3	1	4	(16) ¼" x 3" SDS	(4) ⅜" x 5" Titen HD	3,285	2,365
HTT4	1	2	(18) 0.148" x 1½"	(1) ⅝" ATR	3,610	3,105
MGT	1	2	(22) 0.148" x 3"	(1) ⅝" ATR	3,965	3,330
HTT4	1	2	(18) 0.162" x 2½"	(1) ⅝" ATR	4,235	3,640
HTT5	1	2	(26) 0.148" x 1½"	(1) ⅝" ATR	4,350	3,740
HDU4-SDS2.5	1	2	(10) ¼" x 2½" SDS	(1) ⅝" ATR	4,565	3,285
HTT5	1	2	(26) 0.148" x 3"	(1) ⅝" ATR	4,670	4,015
FGTR[8,9,10]	1	2	(18) ¼" x 3" SDS	(2) ½" x 5" Titen HD	4,725	3,400
VGT[11]	1	2	(16) ¼" x 3" SDS	(1) ⅝" ATR	4,940	3,555
HTT5	1	2	(26) 0.162" x 2½"	(1) ⅝" ATR	5,090	4,375
HPA35[5]	1	2	(27) 0.162" x 3½"	Embed 8¼"	4,860	4,180
VGT L/R[11]	2	2	(32) ¼" x 3" SDS	(2) ⅝" ATR	5,545	3,990
HDU5-SDS2.5	1	2	(14) ¼" x 2½" SDS	(1) ⅝" ATR	5,645	4,340
HDU2-SDS2.5	2	2	(12) ¼" x 2½" SDS	(2) ⅝" ATR	6,150	4,430
VGT[11]	2	2	(32) ¼" x 3" SDS	(2) ⅝" ATR	7,185	5,170
HTT5	2	2	(52) 0.148" x 1½"	(2) ⅝" ATR	8,700	7,480
FGTR[8,9,10]	2	2	(36) ¼" x 3" SDS	(4) ½" x 5" Titen HD	8,885	6,395
VGT[11]	2	3	(32) ¼" x 3" SDS	(2) ⅝" ATR	8,890	6,400
HDQ8-SDS3	1	2	(20) ¼" x 3" SDS	(1) ⅞" ATR	9,230	7,020
HGT-2	1	2	(16) 0.148" x 3"	(2) ⅝" ATR	10,690	10,690
HGT-3	1	3	(16) 0.148" x 3"	(2) ⅝" ATR	10,790	10,790
HDU5-SDS2.5	2	2	(28) ¼" x 2½" SDS	(2) ⅝" ATR	11,290	8,680
HGT-4	1	4	(16) 0.148" x 3"	(2) ⅝" ATR	11,455	11,455

1. Holdown load values are based on a 3" thick vertical member. See the current Simpson Strong-Tie® *Wood Construction Connectors* catalog for load values based on different wood thicknesses. Wood member design by specifier.
2. The designer must specify anchor type, length and embedment.
3. The designer must evaluate multiple installations not listed.
4. ATR — All-Thread Rod or Anchor Bolt.
5. PA28 and HPA35 must be embedded in center of a concrete tie beam (minimum width = 7⅝").
6. Multiple HDUs and HTTs must be installed staggered on truss.
7. Hex-head model required. For concrete applications, use ¼" x 1¾" Titen Turbo screw anchors. Titen 2 may be substituted for Titen Turbo. See p. 64 for important information.
8. To achieve the published loads, the FGTR must be attached to a grouted and reinforced block concrete wall designed by others to transfer the uplift loads to the foundation.
9. FGTR is packaged with Simpson Strong-Tie Strong-Drive® SDS Heavy-Duty Connector screws and Titen HD screw anchors.
10. Screw holes on FGTR and VGT are configured to allow for a double installation on a two-ply truss.
11. To achieve the loads listed for the MGT, HGT and VGT single and double connector options, anchor into a 8" wide concrete tie-beam or grouted and reinforced CMU tie-beam can be made using Simpson Strong-Tie SET-XP® epoxy anchoring adhesive with a minimum embedment depth of 12", a minimum end distance of 12" and centered in the 8" member. Vertical reinforcement may be required to transfer the loads per designer.
12. LTA2 uplift is 1,180 lb. for DF.
13. Where noted, allowable uplift loads in table are for SP. For DF, MGT = 3,165 lb. (160).

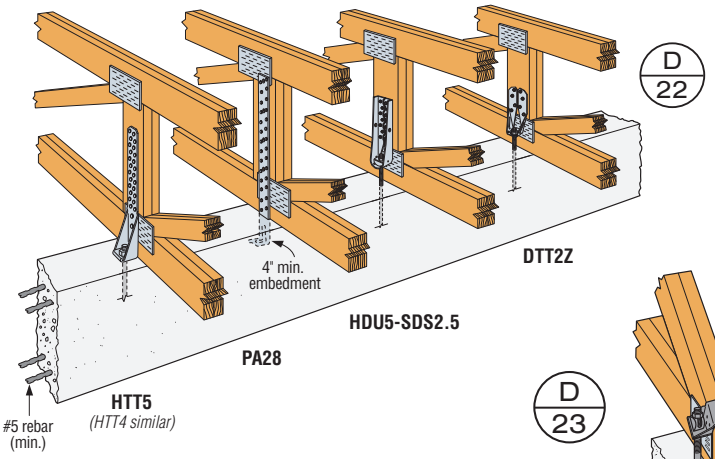

Moisture barrier not shown for clarity

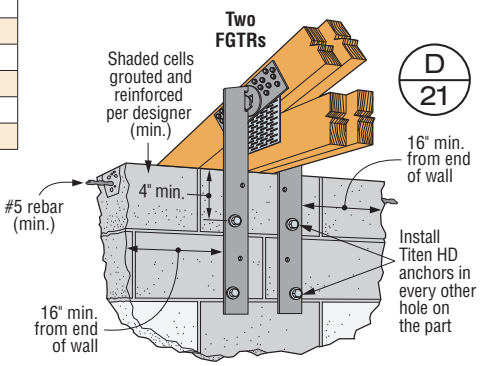

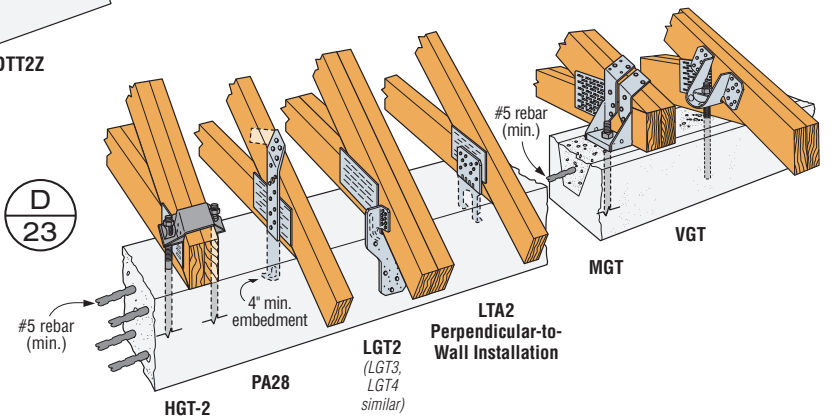

Truss/Rafter Hip to Wall

SS SD For details about these icons, see p. 11.

	Model No.	Member Size	Fasteners		DF/SP Allowable Loads (160)		SPF Allowable Loads (160)	
			To Truss/Rafter	To Wall	Uplift	F_1	Uplift	F_1
	TJC37 (1–85°)	2x4 min.	(6) 0.131" x 1½"	(6) 0.131" x 1½"	375[7]	—	325[7]	—
	TJC57 (1–85°)	2x6 min.	(12) 0.131" x 1½"	(12) 0.131" x 1½"	750[7]	—	645[7]	—
SS	HCP2[1]	2x	(6) 0.148" x 1½"	(6) 0.148" x 1½"	590	255	510	220
SS	HCP1.81[1]	1¾	(6) 0.148" x 1½"	(6) 0.148" x 1½"	590	255	510	220
	MTSM16	2x	(7) 0.148" x 1½"	(4) ¼" x 2¼" Titen Turbo™[3]	830	—	715	—
SS	MTS12	2x	(7) 0.148" x 1½"	(7) 0.148" x 1½"	830	—	715	—
SS	HCP4Z	4x	(8) 0.148" x 3"	(8) 0.148" x 3"	990	230	850	200
	HTSM16	2x	(8) 0.148" x 1½"	(4) ¼" x 2¼" Titen Turbo[3]	1,110	—	955	—
SS	HTS16	2x	(8) 0.148" x 1½"	(8) 0.148" x 1½"	1,445[8]	—	1,215	—
	FGTRH L/R[5,6]	(2) 2x	(18) ¼" x 3" SDS	(2) ½" x 5" Titen HD®	3,635	—	2,615	—

1. The HCP can be installed on the inside and the outside of the wall with a flat bottom chord truss and achieve twice the load capacity.
2. MTS12, HTS16, HTSM16 and MTSM16 can be field bent once to a 45° angle. Loads apply to longer length models.
3. Hex-head model required. For concrete applications, use ¼" x 1¾" Titen Turbo screw anchors. Titen 2 may be substituted for Titen Turbo. See p. 64 for important information.
4. Minimum edge distance for ¼" Titen Turbo hex-head screw anchor is 1½" and ½" Titen HD screw anchor is 4".
5. To achieve the published loads, the FGTR must be attached to a grouted and reinforced block wall or reinforced concrete wall designed by others to transfer the uplift loads to the foundation.
6. FGTR is packaged with Simpson Strong-Tie® Strong-Drive® SDS Heavy-Duty Connector screws and Titen HD anchors.
7. For alternate TJC installation angles, fasteners and load values, see the *Wood Construction Connectors* catalog or visit **strongtie.com**.
8. Where noted, allowable uplift loads in table are for SP. For DF, HTS16 = 1,415 lb. (160).

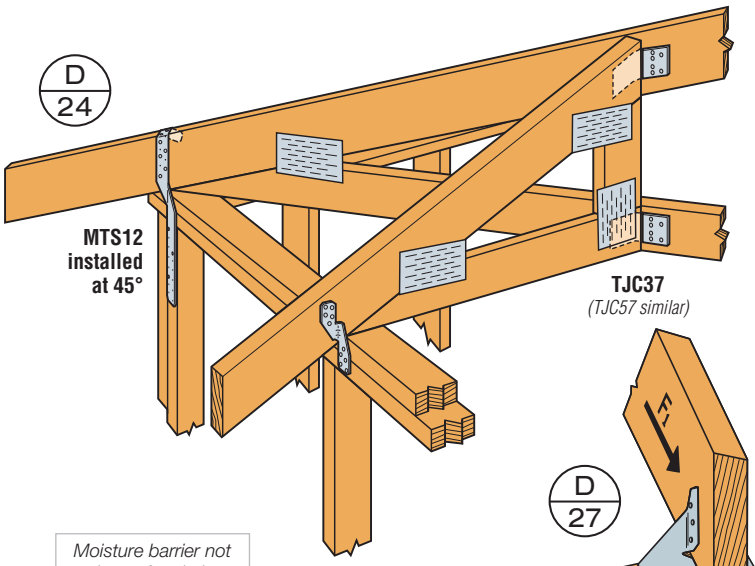

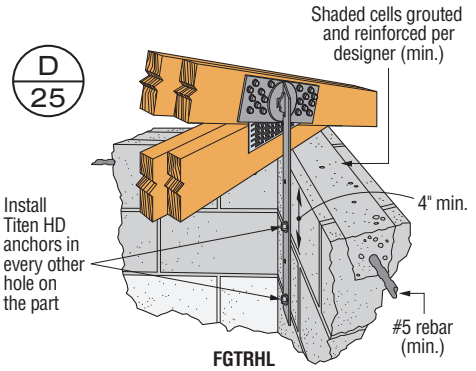

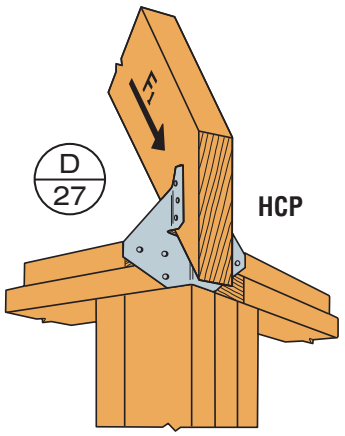

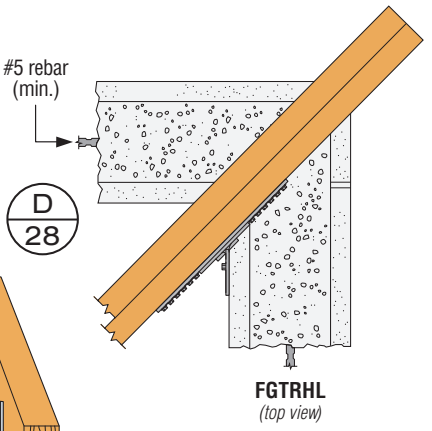

Moisture barrier not shown for clarity

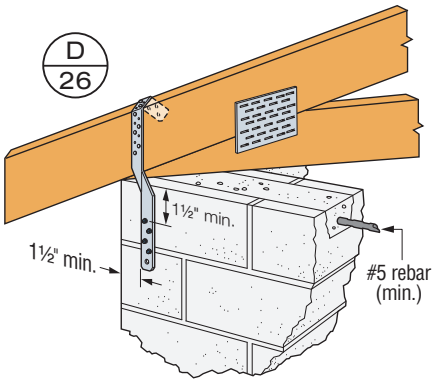

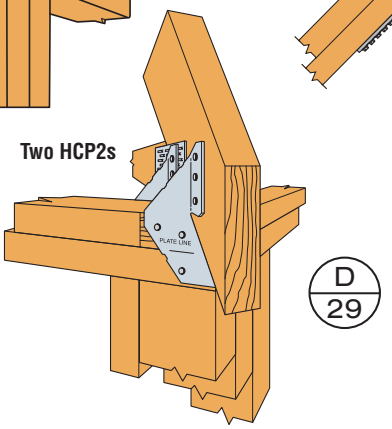

Truss/Rafter Hip to End Wall

Model No.	Member Size (Min.)	Fasteners		DF/SP Allowable Loads			SPF Allowable Loads		
		To Truss	To Wall	Uplift (160)	Parallel to Plate (F_1) (160)	Perp. to Plate (F_2) (160)	Uplift (160)	Parallel to Plate (F_1) (160)	Perp. to Plate (F_2) (160)
MTSM16[4]	(2) 2x	(7) 0.148" x 1½"	(4) ¼" x 2¼" Titen Turbo™[1]	830	120	90	715	120	90
HTSM16[4]	(2) 2x	(8) 0.148" x 1½"	(4) ¼" x 2¼" Titen Turbo[1]	1,110	120	90	955	120	90
MSTAM24	(2) 2x	(9) 0.148" x 3"	(5) ¼" x 2¼" Titen Turbo[1]	1,375	—	—	1,460	—	—
MSTAM36	(2) 2x	(13) 0.148" x 3"	(8) ¼" x 2¼" Titen Turbo[1]	1,870	—	—	1,870	—	—
MSTCM40	(2) 2x	(26) 0.148" x 3¼"	(14) ¼" x 2¼" Titen Turbo[1]	4,220	—	—	4,220	—	—
MSTCM60	(2) 2x	(26) 0.148" x 3¼"	(14) ¼" x 2¼" Titen Turbo[1]	4,220	—	—	4,220	—	—
FGTR[2,3]	(2) 2x	(18) ¼" x 3" SDS	(2) ½" x 5" Titen HD®	4,425	—	—	3,400	—	—

1. Hex-head model required. For concrete applications, use ¼" x 1¾" Titen Turbo screw anchors. Titen 2 may be substituted for Titen Turbo. See p. 64 for important information.
2. To achieve the published loads, the FGTR must be attached to a grouted and reinforced block wall or reinforced concrete wall designed by others to transfer the uplift loads to the foundation.
3. FGTR is packaged with Simpson Strong-Tie® Strong-Drive® SDS Heavy-Duty Connector screws and Titen HD screw anchors.
4. When installing MTSM and HTSM connectors, the following installation instructions are required for lateral loads to apply:
   a) The first four holes for Titen Turbo hex-head screw anchors after the bend area must be filled on the concrete/masonry end of the connection.
   b) The first seven nail holes after the bend area must be filled with 0.148" x 1½" nails on the wood end of the connection. Any additional required nails may be placed in any open hole on the wood end of the strap.

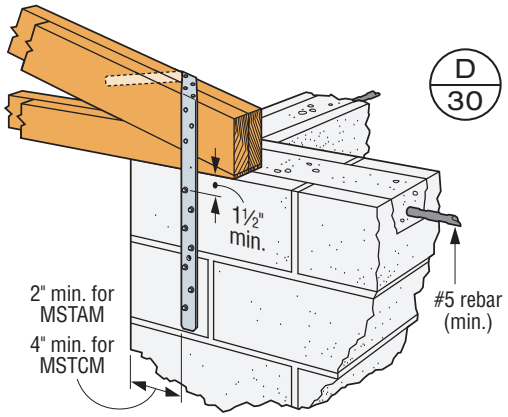

MSTAM36
(MSTAM24, MSTCM40 similar)

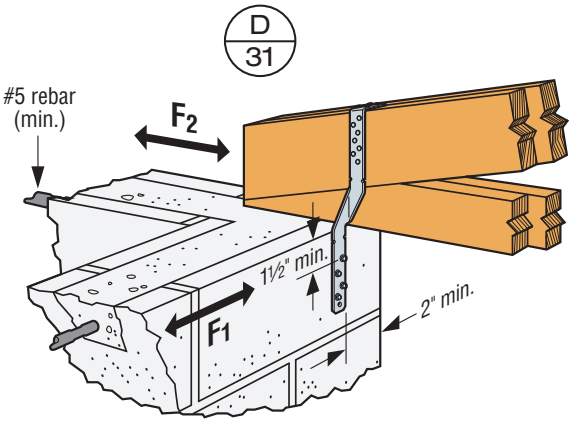

MTSM16
(HTSM16 similar)

Moisture barrier not shown for clarity

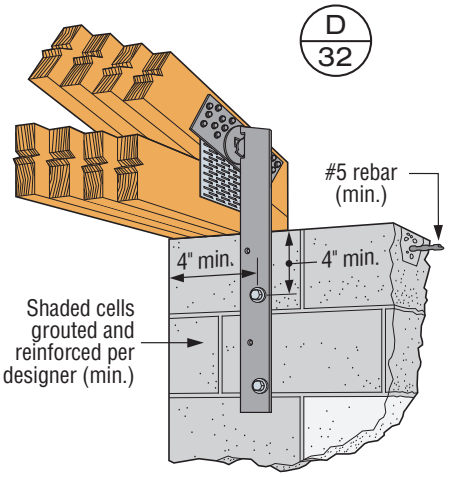

FGTR

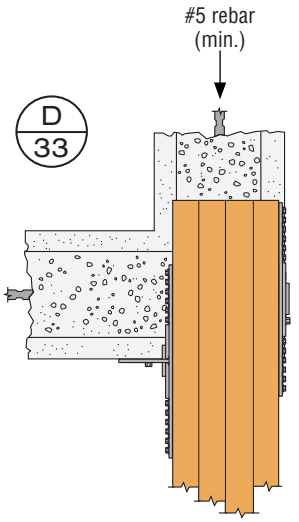

FGTR
(top view)

Truss/Rafter to Single Top Plate

SS SD For details about these icons, see p. 11.

	Model No.	Qty. Req.	Fasteners		DF/SP Allowable Loads			SPF/HF Allowable Loads		
			To Truss/Rafter	To Plate	Uplift (160)	Parallel to Plate (F_1) (160)	Perp. to Plate (F_2) (160)	Uplift (160)	Parallel to Plate (F_1) (160)	Perp. to Plate (F_2) (160)
SS	H2.5ASS	1	(4) 0.131" x 2½"	(4) 0.131" x 2½"	265	—	—	230	—	—
	H2.5A	1	(4) 0.131" x 1½"	(4) 0.131" x 1½"	390	—	—	335	—	—
SS	H3	1	(4) 0.131" x 2½"	(4) 0.131" x 2½"	400	210	170	365	180	145
	HGA10[6,7]	1	(4) ¼" x 1½" SDS	(4) ¼" x 1½" SDS	605	720	500	435	520	360
	FCB43.5[8]	1	(4) #10 x 1½" SD	(4) #10 x 1½" SD	655	395	670	565	395	550
	H2.5A	2[4]	(8) 0.131" x 1½"	(8) 0.131" x 1½"	780	—	—	630	—	—
SS	H3	2[4]	(8) 0.131" x 2½"	(8) 0.131" x 2½"	800	420	340	730	360	290
	H16	1	(2) 0.148" x 1½"	(6) ¼" x 2¼" Titen Turbo™[1]	1,370	—	—	1,180	—	—
	META16	1	(8) 0.148" x 1½"	N/R	1,450	340	770	1,180	340	675
	META20	1	(8) 0.148" x 1½"	N/R	1,450	340	770	1,180	340	675
	VGT	1	(16) ¼" x 3" SDS	(1) ⅝"-dia. ATR	4,940	—	—	3,555	—	—

1. Hex-head model required. For concrete applications, use ¼" x 1¾" Titen Turbo screw anchors. Titen 2 may be substituted for Titen Turbo. See p. 64 for important information.
2. N/R — Not required, product is embedded into concrete or CMU.
3. Refer to p. 18 for multiple META loads.
4. Refer to p. 49 for installation details of two connectors on a single truss.
5. H16 factory sloped to 5:12, but 3:12–7:12 roof slope is acceptable.
6. HGA10 loads in table are for when truss is perpendicular to the wall as depicted in D35. If truss is parallel with wall, then uplift is 695 lb., F_1 is 925 lb. and F_2 is 780 lb. for DF/SP. For SPF/HF, multiply load values by 0.72.
7. HGA10 is sold in a kit that includes 1½" and 3" SDS Heavy-Duty Connector screws. Additional 1½" SDS screws will be required for single 2x plate installations.
8. Provided the structural steel is 3⁄16" thick with F_y = 36 ksi minimum, the FCB43.5 may be connected directly to steel with a minimum of (3) #12–14 self-drilling screws or (4) 0.157" PDPAT powder-actuated fasteners for full loads listed above. It is the responsibility of the designer to select proper-length fasteners based on the installation.

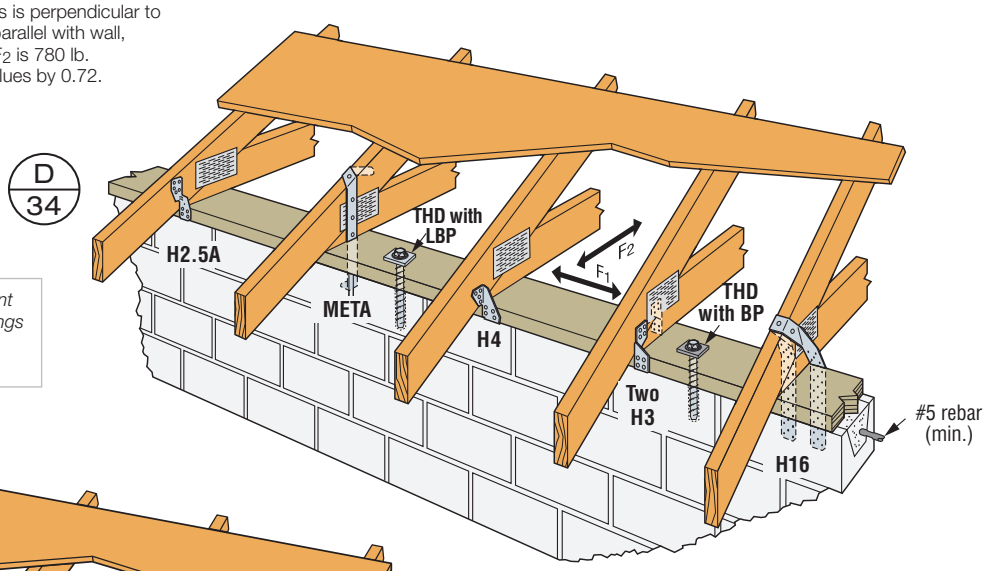

Refer to pp. 8–10 for important considerations regarding coatings on connectors attached to preservative-treated wood.

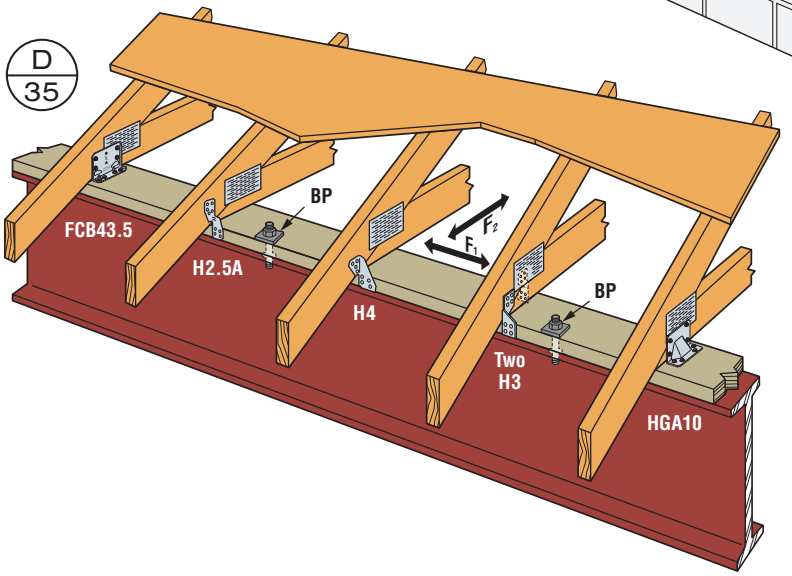

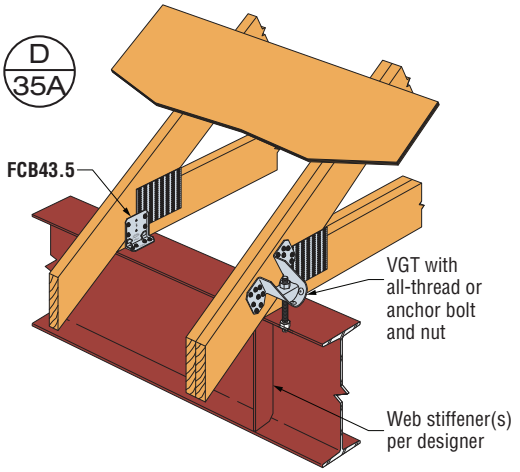

Hollow Column

Refer to technical bulletin T-C-COLUMN for allowable load tables and more installation information.

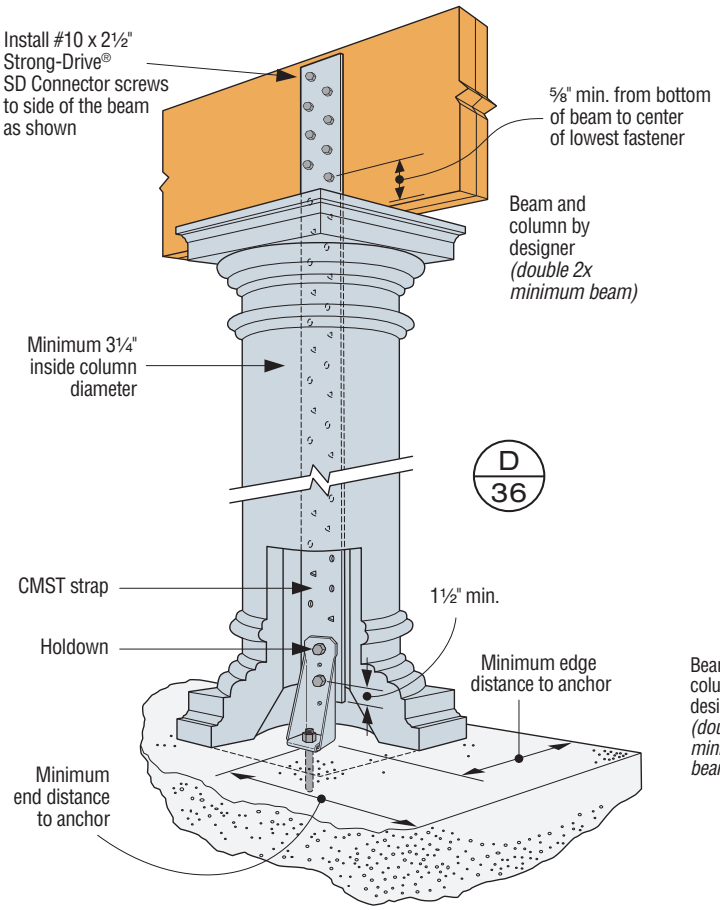

CMST Strap Configuration Installation

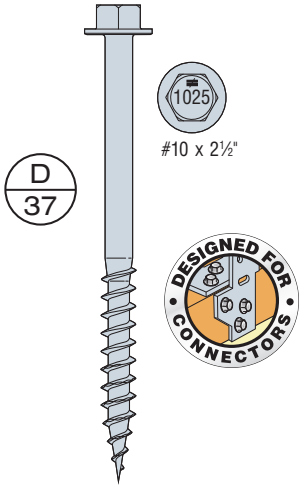

Strong-Drive SD CONNECTOR Screw (SD10)

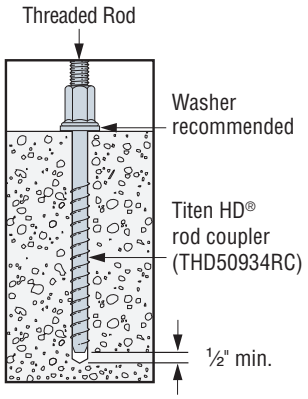

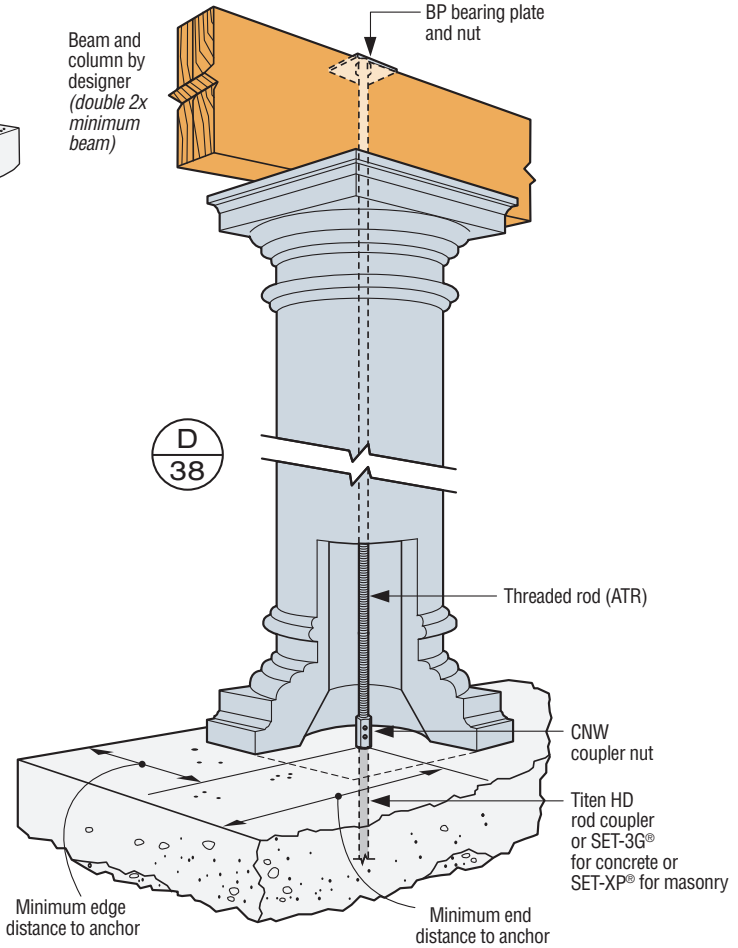

All-Thread Rod Configuration Installation

Truss/Rafter Directly to Stud

SS SD For details about these icons, see p. 11.

Model No.	Qty. Req.	Fasteners (Total)			DF/SP Allowable Loads			SPF Allowable Loads		
		To Truss/Rafter	To Stud	To Plate	Uplift (160)	Parallel to Plate (F_1) (160)	Perp. to Plate (F_2) (160)	Uplift (160)	Parallel to Plate (F_1) (160)	Perp. to Plate (F_2) (160)
SS H2ASS	1	(5) 0.131" x 1½"	(5) 0.131" x 1½"	(2) 0.131" x 1½"	400	130	55	345	130	55
H2A	1	(5) 0.131" x 1½"	(5) 0.131" x 1½"	(2) 0.131" x 1½"	525	130	55	495	130	55
SS LTS12[6,9]	1	(6) 0.148" x 1½"	(6) 0.148" x 1½"	—	660[8]	75[1]	125[1]	555	75[1]	125[1]
H7Z	1	(4) 0.131" x 2½"	(8) 0.131" x 2½"	(2) 0.131" x 2½"	830	410	—	715	355	—
H10S[2,3]	1	(8) 0.131" x 1½"	(8) 0.131" x 2½"	(8) 0.131" x 1½"	910	660	215	785	570	185
SS MTS12[6,9]	1	(7) 0.148" x 1½"	(7) 0.148" x 1½"	Footnote 1	990	75[1]	125[1]	850	75[1]	125[1]
H2A	2	(10) 0.131" x 1½"	(10) 0.131" x 1½"	(4) 0.131" x 1½"	1,050	260	110	990	260	110
SS HTS16[6,9]	1	(8) 0.148" x 1½"	(8) 0.148" x 1½"	Footnote 1	1,445[8]	75[1]	125[1]	1,215	75[1]	125[1]
LGT2[5]	1	(16) 0.148" x 3¼"	(14) 0.148" x 3¼"	Footnote 4	2,040	700[4]	170[4]	1,755	700[4]	170[4]
LGT2[5]	1	(16) #9 x 1½"SD	(14) #9 x 1½"SD	Footnote 4	2,670[8]	700[4]	170[4]	2,125	700[4]	170[4]

1. When installing LTS, MTS and HTS connectors, the following installation instructions are required for the lateral loads to apply. The first seven nail holes after the bend area must be filled with 0.148" x 1½" nails. This applies to straps on either side of bend area. All additional fasteners may be installed in any remaining strap holes.
2. H10S can have the stud offset a maximum of 1" from rafter (center to center) for a reduced uplift of 890 lb. (DF/SP) and 765 lb. (SPF).
3. H10S nails to plates are optional for uplift but required for lateral loads.
4. LGT2 — F_1 load = 700 lb.; F_2 load = 170 lb. with optional installation of (4) 0.162" x 3½" sinkers or (4) #9 x 1½" SD Connector screws in optional nail holes.
5. LGT2 — two-ply member required — attached members must be designed to resist applied loads.
6. Twist straps do not have to be wrapped over the truss to achieve the load.
7. The load capacities of stainless-steel connections match those of carbon-steel connectors when installed with Simpson Strong-Tie® stainless-steel, ring-shank nails.
8. Where noted, allowable uplift loads in table are for SP. For DF, LTS12 = 645 lb. (160) HTS16 = 1,415 lb. (160) and LGT2 with #9 x 1½" SD Connector screw = 2,465 lb. (160).
9. Longer twist straps may be used to achieve same loads where framing dictates it is necessary.

D 39

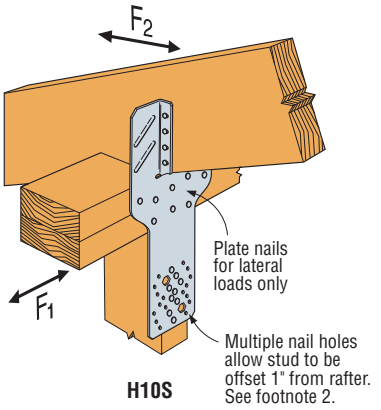

D 40

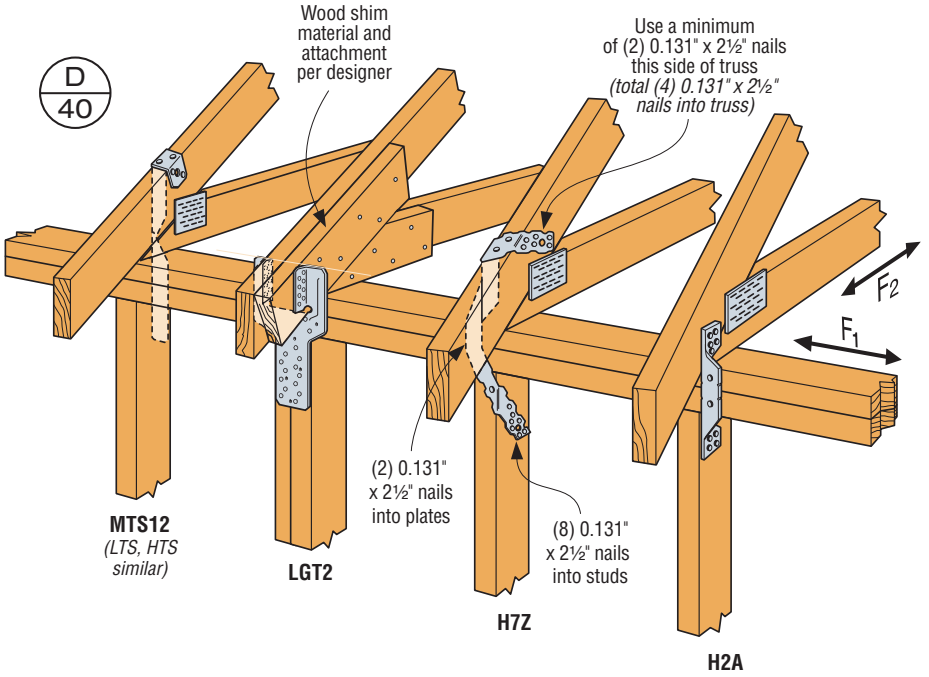

Top Plates to Stud

SS SD For details about these icons, see p. 11.

Model No.	Qty. Req.	Fasteners (Total)		DF/SP Allowable Loads	SPF/HF Allowable Loads
		To Plate	To Stud	Uplift (160)	Uplift (160)
SSP	1	(3) 0.148" x 1½"	(4) 0.148" x 1½"	330	285
RSP4	1	(4) 0.131" x 1½"	(4) 0.131" x 1½"	390	370
SS H2.5ASS	1	(5) 0.131" x 2½"	(5) 0.131" x 2½"	440	380
SDWC15600	1	Wide or narrow face of stud[8]		590	510
H2.5A	1	(5) 0.131" x 1½"	(5) 0.131" x 1½"	625	540
SS LTS12[10]	1	(6) 0.148" x 1½"	(6) 0.148" x 1½"	660[9]	555
DSP	1	(6) 0.148" x 1½"	(8) 0.148" x 1½"	730	730
TSP	1	(6) 0.148" x 1½"	(9) 0.148" x 1½"	755	650
SS H8	1	(5) 0.148" x 1½"	(5) 0.148" x 1½"	780	710
SS MTS12[10]	1	(7) 0.148" x 1½"	(7) 0.148" x 1½"	990	850
SP2[3]	1	(6) 0.148" x 3"	(6) 0.148" x 3"	1,010	605
TSP	1	(6) 0.148" x 3"	(9) 0.148" x 1½"	1,015	875
SDWC15600	2	Wide face of stud only[8]		1,135	980
H2.5A[2]	2	(10) 0.131" x 1½"	(10) 0.131" x 1½"	1,250	1,080
SS LTS12[2,10]	2	(12) 0.148" x 1½"	(12) 0.148" x 1½"	1,320[9]	1,110
SS HTS16[10]	1	(8) 0.148" x 1½"	(8) 0.148" x 1½"	1,415[9]	1,215
SDWC15600	3	Wide face of stud only[8]		1,700	1,470
SS MTS12[2,10]	2	(14) 0.148" x 1½"	(14) 0.148" x 1½"	1,980	1,700
SS HTS16[2,10]	2	(16) 0.148" x 1½"	(16) 0.148" x 1½"	2,890[9]	2,430

Model No.	Qty. Req.	Fasteners (Total)		Allowable Uplift Load			
				DF/SP		SPF/HF	
		To Plate	To Stud	Side[4] (160)	Center[5] (160)	Side[4] (160)	Center[5] (160)
SP4 SP6 SP8	1	N/R	(6) 0.148" x 1½"	415	825	355	710
SPH4[7] SPH6[7] SPH8	1	N/R	(12) 0.148" x 1½"	640[6]	1,280[6]	550	1,100

1. N/R — Not required.
2. Where noted in table, when multiple connectors are installed on opposite sides of wall the top plate shall be loaded concentrically. See Figure D44.
3. For SP2, drive one stud nail at an angle through the stud into the plate. Drive two nails through the connector at an angle into the wide faces of the stud.
4. Use side (eccentric) load when uplift loads are applied to only one face of the top plate.
5. Use center (concentric) loads when uplift loads are applied at the center of the top plate, or where equal loads are applied to both sides of the top plate. Center loads may also be used for stud-to-bottom-plate loads.
6. Maximum load for SPH in SYP lumber is 1,415 lb. for center loading, and 710 lb. for side loading.
7. SPH4 and SPH6 can be installed over nominal ½" sheathing with a maximum DF/SP load of 1,360 lb. for center loading. Order SPH4R or SPH6R.
8. See pp. 59–60 for required installation angles, spacing requirements and additional installation instructions.
9. Where noted, allowable uplift loads in table are for SP. For DF, LTS12 = 645 lb. (160), LTS12 (qty. 2) = 1,290 lb. (160), HTS16 (qty. 1) = 1,415 lb. (160), HTS16 (qty. 2) = 2,830 lb. (160).
10. Longer twist straps may be used to achieve same loads where framing dictates it is necessary.

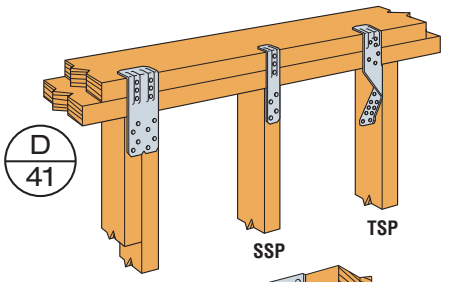

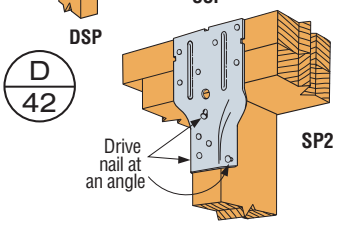

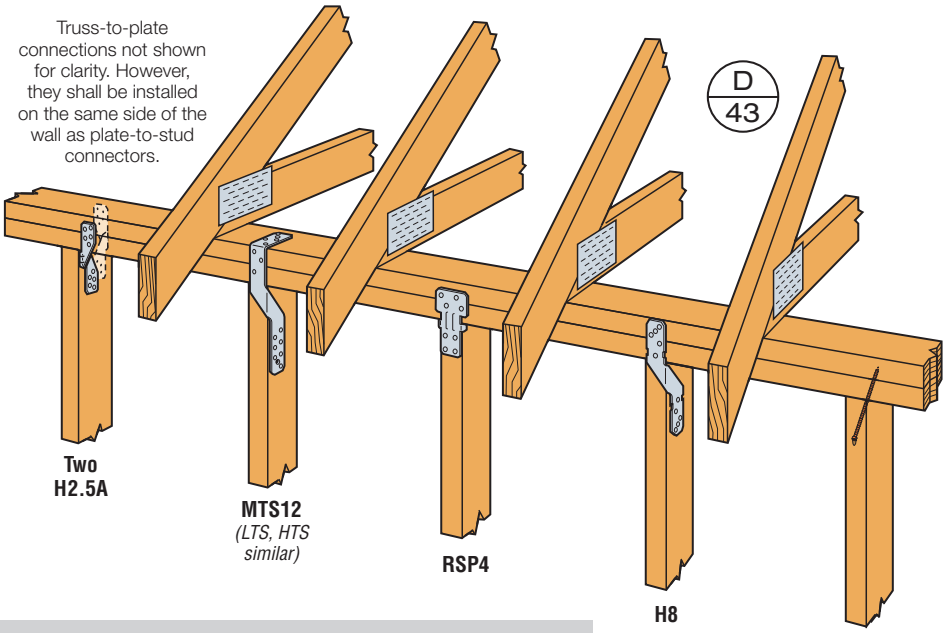

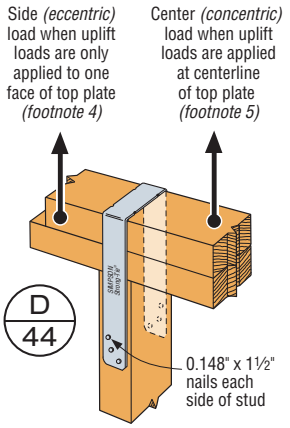

For more detailed information on fastening options with the Strong-Drive SDWC Truss screw, see pp. 56–60.

Stud to Rim Board

SS SD For details about these icons, see p. 11.

	Model No.	Single-Ply Rim Board (1½" Wide)				Double-Ply Rim Board (3" Wide)			
		DF/SP Allowable Uplift Loads		SPF Allowable Uplift Loads		DF/SP Allowable Uplift Loads		SPF Allowable Uplift Loads	
		Fasteners (Total)	(160)	Fasteners (Total)	(160)	Fasteners (Total)	(160)	Fasteners (Total)	(160)
SS	LSTA12[1]	(6) 0.148" x 1½"	555	(6) 0.148" x 1½"	480	(6) 0.148"x 3"	555	(6) 0.148" x 3"	480
SS	LTS16	(12) 0.148" x 1½"	660[10]	(12) 0.148" x 1½"	555	(12) 0.148" x 3"	660[10]	(12) 0.148" x 3"	570
SS	MTS16	(14) 0.148" x 1½"	990	(14) 0.148" x 1½"	850	(14) 0.148" x 3"	990	(14) 0.148" x 3"	850
	CS20[1]	(12) 0.148" x 1½"	1,030	(14) 0.148" x 1½"	1,030	(12) 0.148" x 3"	1,030	(14) 0.148" x 3"	1,030
SS	LSTA18[1]	(12) 0.148" x 1½"	1,110	(12) 0.148" x 1½"	955	(12) 0.148" x 3"	1,110	(12) 0.148" x 3"	955
SS	H6	(16) 0.131" x 2½"	1,230	(16) 0.131" x 2½"	1,055	(16) 0.131" x 2½"	1,230	(16) 0.131" x 2½"	1,055
SS	LSTA24[1]	(14) 0.148" x 1½"	1,235	(16) 0.148" x 1½"	1,235	(14) 0.148" x 3"	1,235	(16) 0.148" x 3"	1,235
SS	HTS16	(16) 0.148" x 1½"	1,445[10]	(16) 0.148" x 1½"	1,215	(16) 0.148" x 3"	1,445[10]	(16) 0.148" x 3"	1,215
SS	LSTA30[1]	(16) 0.148" x 1½"	1,505	(16) 0.148" x 1½"	1,295	(16) 0.148" x 3"	1,505	(16) 0.148" x 3"	1,295
SS	CS16[1]	(20) 0.148" x 1½"	1,705	(20) 0.148" x 1½"	1,550	(20) 0.148" x 3"	1,705	(20) 0.148" x 3"	1,550
	CMST14[1,6]	(24) 0.148" x 1½"	2,390	(24) 0.148" x 1½"	2,065	(24) 0.162" x 3½"	2,810	(24) 0.162" x 3½"	2,435
	MST37[1,6]	(24) 0.148" x 1½"	2,530	(24) 0.148" x 1½"	2,150	(24) 0.162" x 3½"	2,950	(24) 0.162" x 3½"	2,570
	CMST12[1,6]	(24) 0.148" x 1½"	2,630	(24) 0.148" x 1½"	2,280	(24) 0.162" x 3½"	3,060	(24) 0.162" x 3½"	2,650
	MSTC28[1,6]	(28) 0.148" x 1½"	2,690	(28) 0.148" x 1½"	2,325	(28) 0.148" x 3¼"	2,690	(28) 0.148" x 3¼"	2,325

1. Loads for stud to rim board connections are based on a minimum rim board depth of 11¼".
2. Loads for straps based on 2½" clear span between stud and rim board.
3. Multiple members must be fastened together to act as a single unit.
4. For straight straps, use half of the total fasteners listed on each member in the connection. Refer to the Coil Strap Calculator at **strongtie.com/software**.
5. Reduce loads for a single rim board less than 1½" thick.
6. CMST and MST require double studs of a minimum 3" width.
7. Values for straps assume a minimum nail penetration of 10 nail diameters into the stud or rim board.
8. Nailing over sheathing is acceptable as long as 10 nail diameters' minimum penetration into the framing is maintained. See p. 50.
9. Where possible cross-grain tension occurs in detail D45, consider full-length adjacent connectors or EWP rim designed to resist cross-grain tension loads. Refer to D136 on p. 51.
10. Where noted, allowable uplift loads in table are for SP. For DF, LTS16 with 0.148" x 1½" nails = 645 lb. (160) and HTS16 = 1,415 lb. (160).

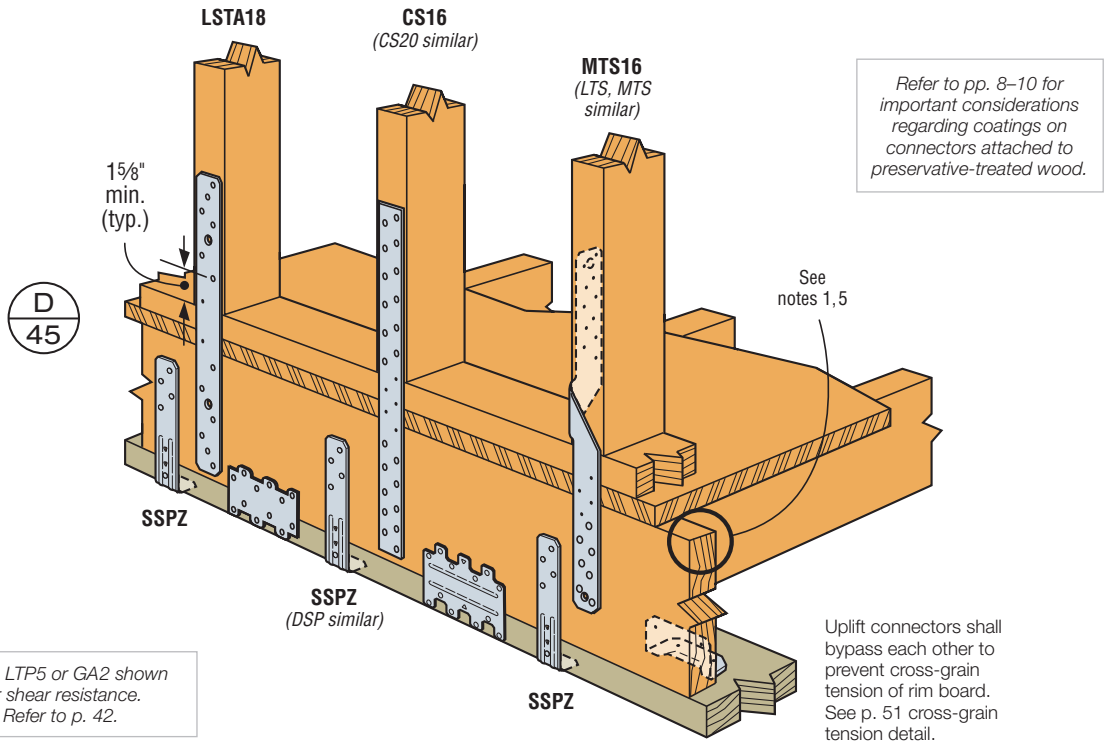

Stud to Stud

SS SD For details about these icons, see p. 11.

Model No.	Qty. Req	DF/SP Allowable Loads		SPF Allowable Loads	
		Fasteners (Total)	Uplift (160)	Fasteners (Total)	Uplift (160)
CSHP20[2,7]	1	(12) 0.131" x 2½"	1,160	(14) 0.131" x 2½"	1,160
LSTA36[2]	1	(14) 0.148" x 2½"	1,315	(14) 0.148" x 2½"	1,135
SS MSTA36[2]	1	(14) 0.148" x 2½"	1,345	(14) 0.148" x 2½"	1,160
CSHP18[2,7]	1	(16) 0.131" x 2½"	1,540	(18) 0.131" x 2½"	1,540
SS CS16[2]	1	(22) 0.131" x 2½"	1,705	(26) 0.131" x 2½"	1,705
SS DTT2Z[6]	2	(16) ¼" x 1½" SDS	1,825	(16) ¼" x 1½" SDS	1,800
MSTA49[2]	1	(26) 0.148" x 2½"	2,020	(26) 0.148" x 2½"	2,020
DTT2Z-SDS2.5[3]	2	(16) ¼" x 2½" SDS	2,145	(16) ¼" x 2½" SDS	2,105
MSTC40[2]	1	(28) 0.148" x 3¼"	2,690	(28) 0.148" x 3¼"	2,325
HDU2-SDS2.5[3]	2	(12) ¼" x 2½" SDS	3,075	(12) ¼" x 2½" SDS	2,215
HDU4-SDS2.5[3]	2	(20) ¼" x 2½" SDS	4,565	(20) ¼" x 2½" SDS	3,285
HDU5-SDS2.5[3]	2	(28) ¼" x 2½" SDS	5,645	(28) ¼" x 2½" SDS	4,340
MSTC66[2]	1	(64) 0.148" x 3¼"	5,850	(64) 0.148" x 3¼"	5,505
CMST14[2,9]	1	(56) 0.162" x 2½"	6,475	(66) 0.162" x 2½"	6,475
CMST12[2,9]	1	(74) 0.162" x 2½"	9,215	(84) 0.162" x 2½"	9,215

1. Loads are based on an 18" clear span. **Note:** Where straps are used, longer straps will be required to achieve the same loads for larger clear spans, or the strap capacity will have to be reduced as described in footnote 8.
2. Nailing over ½" minimum wood structural panel sheathing is acceptable provided minimum 2½" long nails are used. See p. 52.
3. Allowable loads for DTT2Z-SDS2.5 and HDU based on (2) 2x and greater vertical wood member.
4. See footnote 1. Cut lengths for coil strap are CS16 = 46", CSHP18 = 40", CSHP20 = 36", CMST14 = 78", CMST12 = 94".
5. For straight straps, use half the total fasteners listed on each member in the connection.
6. For stainless steel, order DTT2SS.
7. The high-performance coil strap features a raised embossment for ease of use with a standard framing nailer. The colored dot must be installed facing out.
8. Calculate the straight strap value for a reduced number of nails as follows:

$$\text{Allowable Load} = \frac{\text{No. of Nails Used}}{\text{No. of Nails in Table}} \times \text{Table Load}$$

or refer to the Coil Strap Calculator at **strongtie.com/software**.
9. CMST straps require attachment to a minimum 3" wide member.

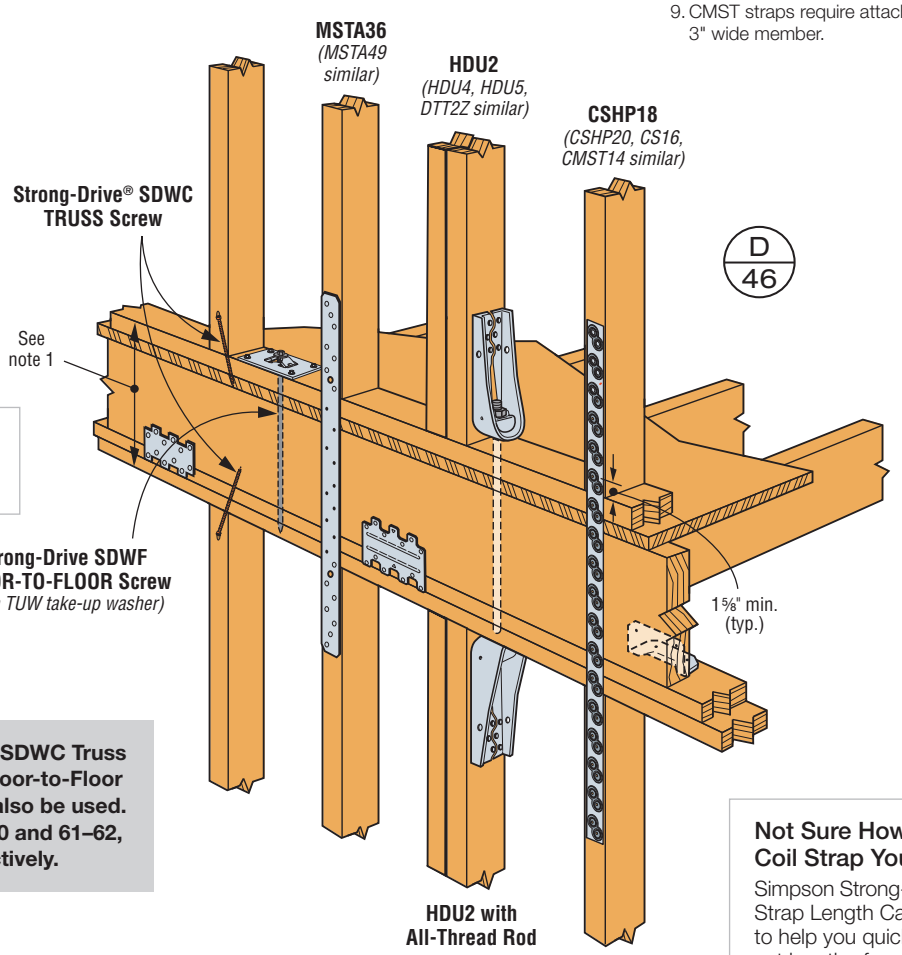

Strong-Drive SDWC Truss and SDWF Floor-to-Floor screws may also be used. See pp. 59–60 and 61–62, respectively.

Not Sure How Much Coil Strap You Need?

Simpson Strong-Tie offers the Coil Strap Length Calculator, designed to help you quickly determine the cut length of each strap needed for each application or a project. Visit **strongtie.com/software**.

Floor to Masonry/Concrete

SS SD For details about these icons, see p. 11.

Model No.	Qty. Req	Fasteners To Block/ Concrete	DF/SP Allowable Loads		SPF Allowable Loads	
			Fasteners (Total)	Uplift (160)	Fasteners (Total)	Uplift (160)
DTT1Z	1	⅜" ATR and THD37634RC[8]	(8) 0.148" x 1½"	910	(8) 0.148" x 1½"	850
HETA16	1	Embedded	(8) 0.148" x 1½"	1,535	(8) 0.148" x 1½"	1,330
MSTAM24	1	(5) ¼" x 2¼" Titen Turbo™[5]	(9) 0.148" x 3"	1,375[9]	(9) 0.148" x 3"	1,375
SS HETA20	1	Embedded	(10) 0.148" x 1½"	1,810	(11) 0.148" x 1½"	1,810
SS DTT2Z	1	½" ATR	(8) ¼" x 1½" SDS	1,825	(8) ¼" x 1½" SDS	1,800
MSTAM36	1	(8) ¼" x 2¼" Titen Turbo[5]	(13) 0.148" x 3"	1,870	(13) 0.148" x 3"	1,870
HETA40	1	Embedded	(10) 0.148" x 1½"	1,810	(11) 0.148" x 1½"	1,810
THA426	1	(14) ¼" x 2¼" Titen Turbo[5]	(6) 0.162" x 3½"	2,150	(6) 0.162" x 3½"	1,850
HETA16	2	Embedded	(16) 0.148" x 1½"	2,815	(16) 0.148" x 1½"	2,655
HDU2-SDS2.5	1	⅝" ATR	(6) ¼" x 2½" SDS	3,075	(6) ¼" x 2½" SDS	2,215
MSTCM40[3]	1	(14) ¼" x 2¼" Titen Turbo[5]	(26) 0.148" x 3¼"	4,220	(26) 0.148" x 3¼"	4,220
MSTCM60[3]	1	(14) ¼" x 2¼" Titen Turbo[5]	(26) 0.148" x 3¼"	4,220	(26) 0.148" x3¼"	4,220
HTT5	1	⅝" ATR	(26) 0.148" x 3"	4,670	(26) 0.148" x 3"	4,015
HDU5-SDS2.5	1	⅝" ATR	(14) ¼" x 2½" SDS	5,645	(14) ¼" x 2½" SDS	4,340

1. Holdown load values are based on a 3" thick vertical member. See the current Simpson Strong-Tie® *Wood Construction Connectors* catalog for load based on different wood thickness. Post design by Specifier.
2. HETA will require a 30° bend and a 6" minimum strap embedment depth in a concrete tie beam only. See detail D/48. Loads based on SP lumber only. Strap may be bent one full cycle only.
3. MSTCM requires attachment to a minimum 3" wide member.
4. When nailing a strap over ½" maximum wood structural panel sheathing, use 2½" long nail minimum.
5. Hex-head model required. For concrete applications, use ¼" x 1¾" Titen Turbo screw anchors. Titen 2 may be substituted for Titen Turbo. See p. 64 for important information.
6. ATR — All-Thread Rod. The designer must specify anchor type, length and embedment.
7. Standard cut washer is required with the ⅜" ATR.
8. THDRC listed for use with 8" concrete tie beam, 1¾" edge, 8" end distance, uncracked concrete with no supplementary reinforcement and 2,500 psi concrete minimum. Designer shall specify adhesive anchor for CMU bond beam.
9. MSTAM24 allowable tension load to concrete is 1,460 lb.

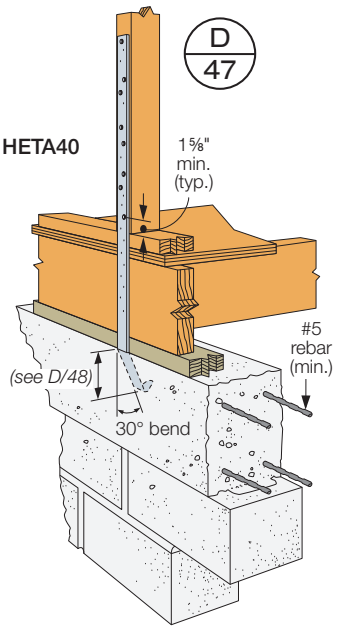

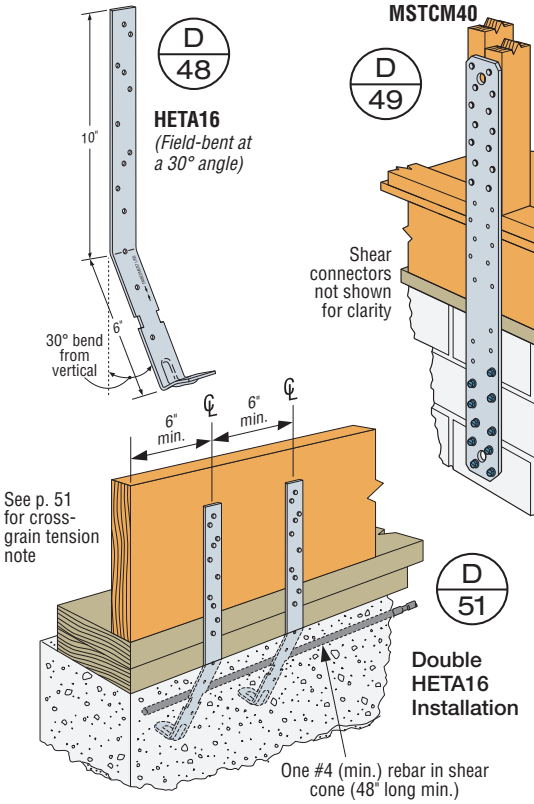

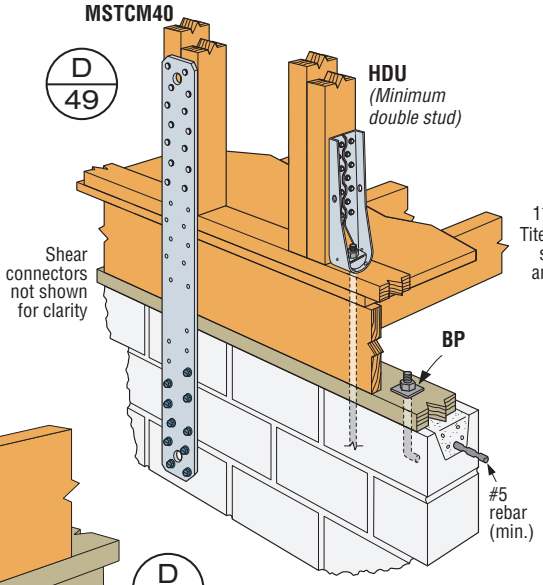

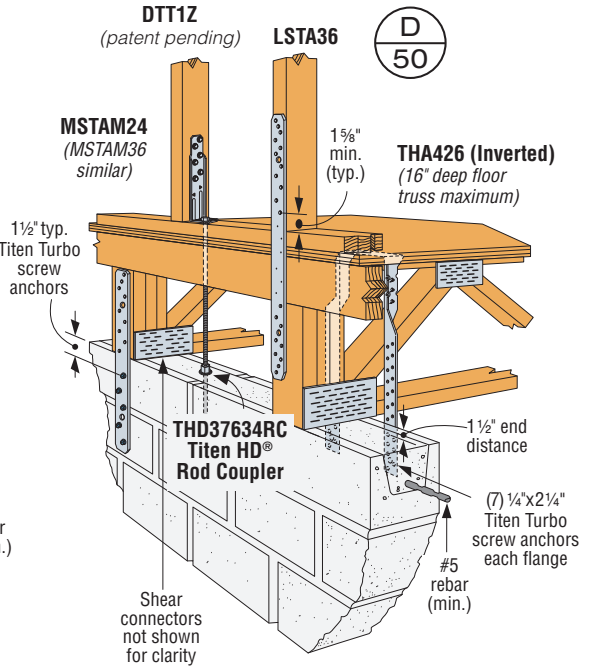

Refer to pp. 8–10 for important considerations regarding coatings on connectors attached to preservative-treated wood.

Stud to Sill Plate

SS SD For details about these icons, see p. 11.

	Model No.	Qty. Req.	Fasteners (Total)		DF/SP Allowable Loads	SPF Allowable Loads
			To Stud	To Plate	Uplift (160)	Uplift (160)
	RSP4	1	(4) 0.131" x 1½"	(4) 0.131" x 1½"	245	285
SS	H2.5ASS	1	(4) 0.131" x 2½"	(4) 0.131" x 2½"	285	245
	SDWC15450	1	Narrow Face of Stud Only[6,9]		295	255
SS	H8	1	(5) 0.148" x 1½"	(5) 0.148" x 1½"	310	265
	SDWC15450	1	Wide Face of Stud Only[6,9]		360	310
	H2.5A	1	(4) 0.131" x 1½"	(4) 0.131" x 1½"	390	335
	SSP	1	(4) 0.148" x 1½"	(1) 0.148" x 1½"	395	310
SS	H3	1	(4) 0.131" x 2½"	(4) 0.131" x 2½"	400	365
	SDWC15600	1	Wide or Narrow Face of Stud[6,9]		450	310
	TSP	1	(6) 0.148" x 1½"	(3) 0.148" x 1½"	520	400
	SP1	1	(6) 0.148" x 3"[3]	(4) 0.148" x 3"	555	535
	DSP	1	(8) 0.148" x 1½"	(2) 0.148" x 1½"	620	515
	SDWC15450	2	Wide Face of Stud Only[6,9]		690	595
SS	H3	2	(8) 0.131" x 2½"	(8) 0.131" x 2½"	800	730
SS	SP4	1	(6) 0.148" x 1½"	—	825	710
SS	SP6	1	(6) 0.148" x 1½"	—	825	710
	SP8	1	(6) 0.148" x 1½"	—	825	710
	SDWC15600	2	Wide Face of Stud Only[6,9]		865	595
	SDWC15450	3	Wide Face of Stud Only[6,9]		1,035	895
	SPH4	1	(12) 0.148" x 1½"	—	1,415[3]	1,100
	SPH6	1	(12) 0.148" x 1½"	—	1,415[3]	1,100
	SPH8	1	(12) 0.148" x 1½"	—	1,415[3]	1,100
	SDWC15600	3	Wide Face of Stud Only[6,9]		1,295	895

1. SPF loads reflect attachment to SPF stud and/or sill.
2. Maximum loads for SPH connector in Douglas Fir is 1,280 lb.
3. SP1 drive one stud nail at an angle through the stud into the plate to achieve table load.
4. SPH4 and SPH6 can be installed over nominal ½" wood structural panel sheathing with a maximum DF/SP load of 1,280 lb. Order SPH4R or SPH6R.
5. Douglas Fir allowable uplift load for TSP is 465 lb.
6. See pp. 59–60 for required installation angles, spacing requirements and additional installation instructions.
7. Allowable loads of stainless steel connections match those of carbon-steel connectors when installed with Simpson Strong-Tie® stainless-steel, ring-shank nails.
8. Refer to *Wood Construction Connectors* catalog (C-C-2019) p. 275 for retrofit options.
9. Strong-Drive® SDWC Truss Screw (SDWC15600) should not be used to attach a stud to a treated sill plate. Instead use SDWC Truss Screw (SDWC15450) with E-coat. SDWC15600 can be used at stud-to-raised-floor, bottom-plate connections.

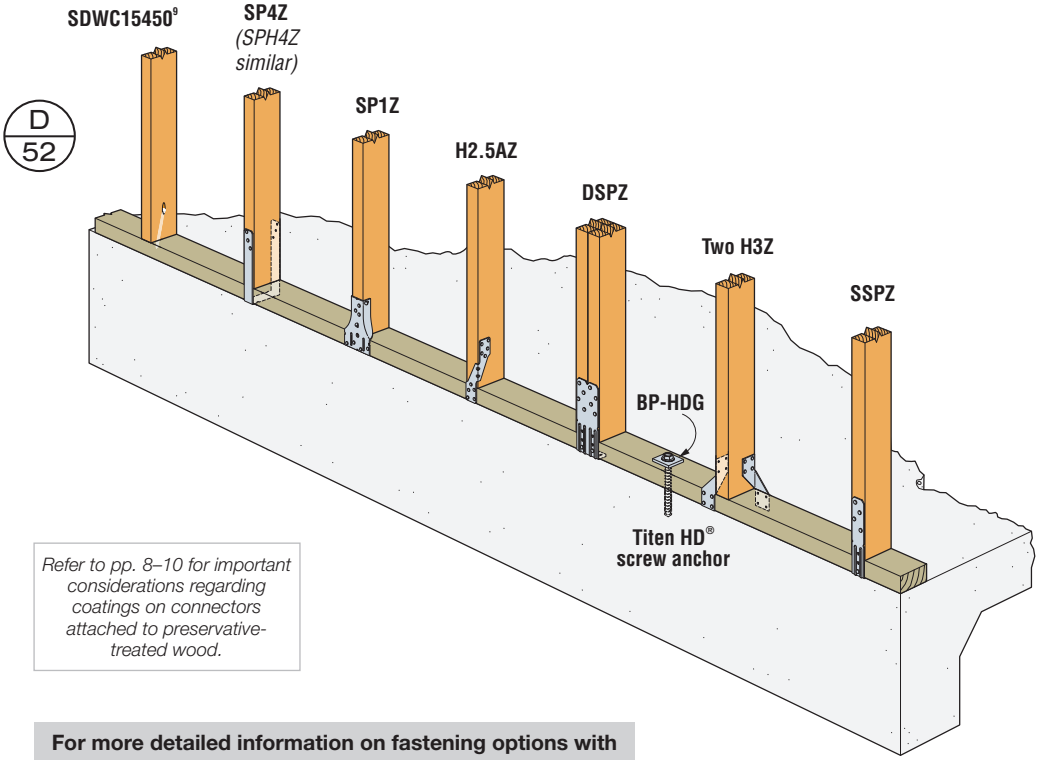

Refer to pp. 8–10 for important considerations regarding coatings on connectors attached to preservative-treated wood.

For more detailed information on fastening options with the Strong-Drive SDWC Truss screw, see pp. 59–60.

Sill Plate to Foundation

For details about this icon, see p. 11.

Model No.	Fasteners (Total)	DF/SP Allowable Loads		
		Uplift	Parallel to Plate (F_1)	Perpendicular to Plate (F_2)
		(160)	(160)	(160)
MAB15	(6) 0.148" x 1½"	565	670	500
MASA (one leg up)	(9) 0.148" x 1½"	755	965	995
LMA4Z	(6) 0.148" x 1½"	905	675	555
LMA6Z	(6) 0.148" x 1½"	905	825	675
MASA (standard install)	(9) 0.148" x 1½"	920	1,475	1,095
THD50600H[1]	—	1,375[2]	1,005	500

1. Titen HD® screw anchor ½" x 6" is based on SP lumber, 1¾" edge, 8" end distance, uncracked concrete and no supplementary reinforcement.
2. Uplift shown requires BP5/8 with Titen HD screw anchor ½" x 6".
3. Minimum concrete strength 2,500 psi.
4. Loads are based on single 2x sill plate applications.

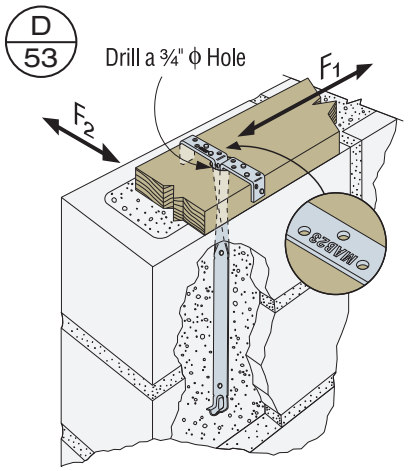

MAB

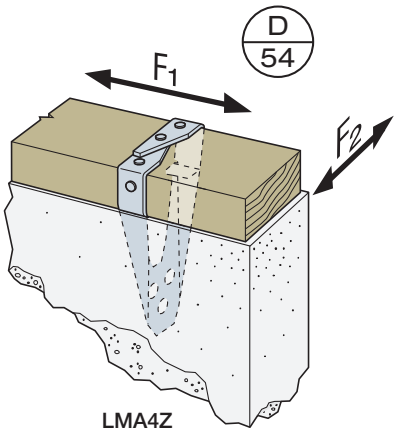

LMA4Z
(LMA6Z similar)

Refer to pp. 8–10 for important considerations regarding coatings on connectors attached to preservative-treated wood.

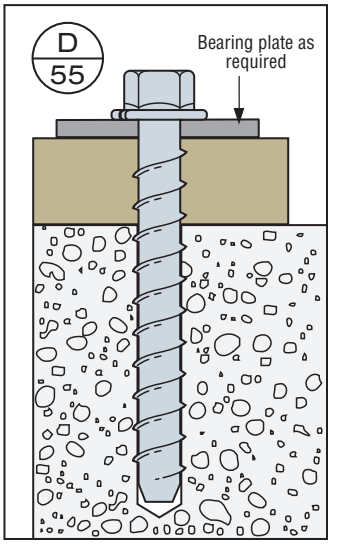

Titen HD Screw Anchor
(See p. 66 for design loads)

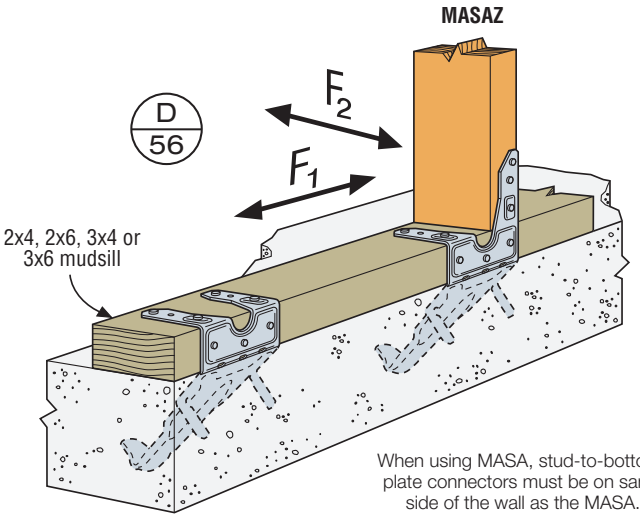

When using MASA, stud-to-bottom-plate connectors must be on same side of the wall as the MASA.

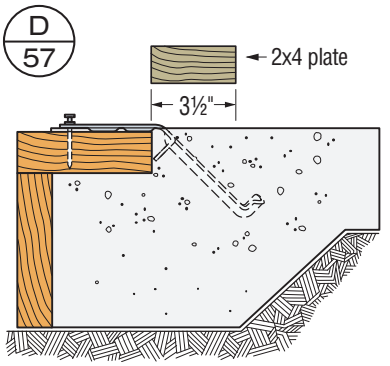

Alternate MASA Installation for Brick Ledges

Header to Wall Framing

SS SD For details about these icons, see p. 11.

Header to Studs

Model No.	Minimum Header Height	DF/SP Allowable Loads		SPF Allowable Loads	
		Fasteners (Total)	Uplift (160)	Fasteners (Total)	Uplift (160)
HH4	3.50"	(11) 0.148" x 1½"	540	(11) 0.148" x 1½"	465
HH4[9]	3.50"	(13) 0.162" x 3½"	720	(13) 0.162" x 3½"	620
SS LSTA12	7.25"	(10) 0.148" x 2½"	925	(10) 0.148" x 2½"	795
HH6	5.50"	(16) 0.148" x 1½"	1,085	(16) 0.148" x 1½"	935
SS CS16	7.25"	(12) 0.148" x 2½"	1,135	(12) 0.148" x 2½"	980
CSHP20	9.25"	(12) 0.131" x 2½"	1,160	(14) 0.131" x 2½"	1,160
SS LSTA18	9.25"	(14) 0.148" x 2½"	1,235	(14) 0.148" x 2½"	1,115
SS LSTA21	11.25"	(16) 0.148" x 2½"	1,235	(16) 0.148" x 2½"	1,235
SS CS16	9.25"	(16) 0.148" x 2½"	1,510	(16) 0.148" x 2½"	1,305
CSHP18	11.25"	(16) 0.131" x 2½"	1,540	(18) 0.131" x 2½"	1,540
SS CS16	11.25"	(18) 0.148" x 2½"	1,700	(20) 0.148" x 2½"	1,630

Studs to Plate/Foundation

Model No.	Fasteners		DF/SP Allowable Loads	SPF Allowable Loads
	Stud	Plate/ Foundation	Uplift (160)	Uplift (160)
DSP[7]	(8) 0.148" x 1½"	(2) 0.148"x1½"	620	515
SS SP4, SP6, SP8[10]	(6) 0.148" x 1½"	—	825	710
SPH4[8], SPH6[8], SPH8	(10) 0.148" x 1½"	—	1,040	895
	(12) 0.148" x 1½"	—	1,415[6]	1,100
SS DTT2Z[5]	(8) ¼" x 1½" SDS	½" ATR	1,825	1,800
LSTHD8[11,12] LSTHD8RJ	(20) 0.148" x 3¼"	Embedded	2,590	2,590
HDU2-SDS2.5	(6) ¼" x 2½" SDS	⅝" ATR	3,075	2,215
HTT4	(18) 0.148" x 1½"	⅝" ATR	3,610	3,105
	(18) 0.162" x 2½"	⅝" ATR	4,235	3,640
HTT5	(26) 0.148" x 1½"	⅝" ATR	4,350	3,740
	(26) 0.148" x 3"	⅝" ATR	4,670	4,015
	(26) 0.162" x 2½"	⅝" ATR	5,090	4,375
HTT5KT[13]	(26) #10 x 2½" SD	⅝" ATR	5,445	5,360
HDU5-SDS2.5	(14) ¼" x2½" SDS	⅝" ATR	5,645	4,340

1. Straps must use half the total fasteners into each member being connected to achieve the listed loads.
2. Multiple straps may be used for increased uplift capacity.
3. For a continuous load path, truss/rafter-to-top-plate/stud/header connections must be on the same side of wall as header-to-stud connections.
4. ATR — All-Thread Rod or Anchor Bolt. The designer must specify anchor type, length, and embedment.
5. For stainless steel, order DTT2SS.
6. Maximum load for SPH in Douglas Fir is 1,280 lb.
7. DSP is for double-stud connections.
8. SPH4 and SPH6 can be installed over nominal ½" sheathing with a maximum DF/SP load of 1,280 lb. Order SPH4R or SPH6R.
9. Where noted, minimum supporting post thickness is 2½".
10. SP4 and SP6 available in stainless steel. SP8 is not.
11. Where noted in table, load listed is for 6" or 8" stem wall corner condition with ½" min. edge distance into non-cracked 2,500 psi concrete. For midwall condition, allowable load is 2,985 lb. for 6" or 8" stem wall. For end-of-wall condition, allowable load is 1,620 lb. for 6" stem wall (2,135 lb. for 8" stem wall).
12. For other STHD models, refer to p. 43.
13. HTT5KT packaged with (26) Strong-Drive® SD Connector screws.

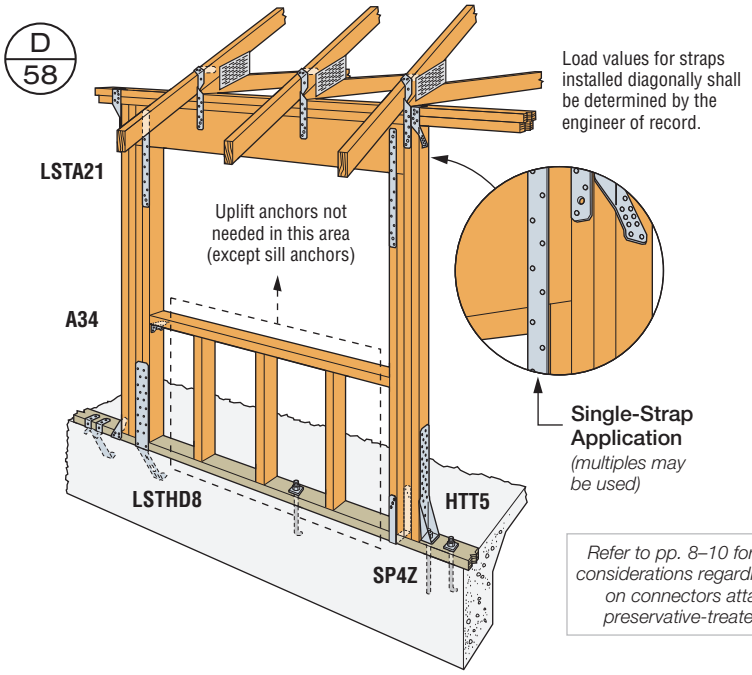

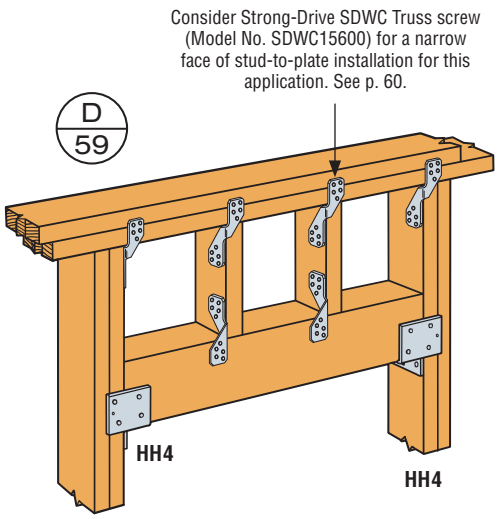

Refer to pp. 8–10 for important considerations regarding coatings on connectors attached to preservative-treated wood.

Stem Wall/Crawlspace

SS For details about these icons, see p. 11.

Model No.	Qty. Req.	Fasteners		DF/SP Allowable Loads	SPF Allowable Loads
		Anchors	Fasteners	Uplift (160)	Uplift (160)
HTSM	1	(4) ¼" x 2¼" Titen Turbo™[5]	(8) 0.148"x1½"	1,110	955
FJA	1	(2) ½" ATR	(2) ½" bolts[4]	1,250	1,075
SS DTT2Z[3]	1	(1) ½" ATR	(8) ¼" x 1½" SDS	1,825	1,800
PA51[1,2]	1	4" Embed	(10) 0.148" x 3"	2,025	1,830
PA68[1,2]	1	4" Embed	(10) 0.148" x 3"	2,025	1,830

1. Minimum embedment for PA into concrete footing is 4" with a minimum of 5" to nearest edge. 8" minimum spacing between straps. Optional nail holes provided.
2. Refer to Simpson Strong-Tie® PA uplift information in *Wood Construction Connectors* catalog for additional information on use of PA straps as foundation anchors, including strap extension. Refer to Engineering letter L-C-PAGFCMUUP for installation into the top of GFCMU.
3. For stainless steel, order DTT2SS.
4. Alternatively, (8) 0.148" x 1½" nails may be used rather than bolts.
5. Hex-head model required. For concrete applications, use (3) ¼" x 1¾" Titen Turbo screw anchors. Titen 2 may be substituted for Titen Turbo.

D 60

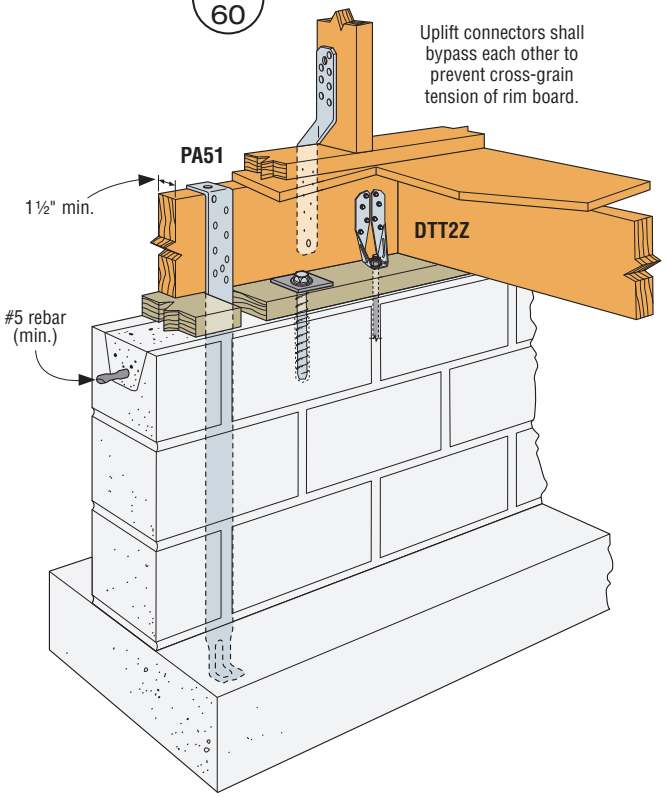

D 61

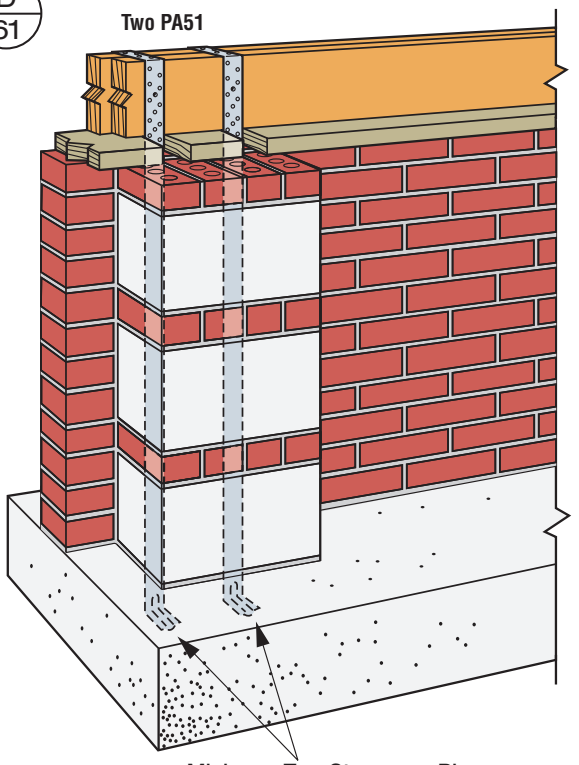

Minimum Two Straps per Pier
Minimum 4" Embedment into Footing

Per ICC 600-2008, Section 305.2.2.2., the assembly shown above is limited to 110 mph and one- and two-story buildings.

D 62

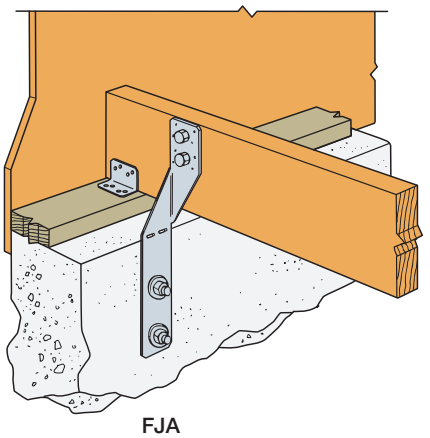

FJA

Refer to pp. 8–10 for important considerations regarding coatings on connectors attached to preservative-treated wood.

Beam to CMU or Concrete Pier

For details about these icons, see p. 11.

Model No.	No. of ¼" x 2½" SDS Screws			16" Square Grout-Filled CMU Pier[3,6]				16" Square CMU Shell Filled with 3,000 psi Concrete[3,7]				Deck Joist Connection	
				Uplift (160)			Lateral (160)	Uplift (160)			Lateral (160)	Download (100)	Uplift (160)
	Main Beam	Side Beam	Deck Beam	Main Beam	Side Beam	Total		Main Beam	Side Beam	Total			
CCQM-SDSHDG	12	—	—	6,750	—	6,750	2,460	6,495	—	6,495	2,650	—	—
CCTQM-SDSG	12	8	—	6,750	5,375	6,750	2,460	6,495	5,375	6,495	2,650	—	—
CCCQM-SDSG	12	8	—	6,750	5,375	6,750	2,460	6,495	5,375	6,495	2,650	—	—
ECCLQMG-KT[8]	16	16	—	6,240	6,240	7,340	2,220	6,240	6,240	7,830	2,565	—	—
ECCLQMDG-KT	16	16	6	6,240	6,240	7,340	2,220	6,240	6,240	7,830	2,565	5,475	2,010

1. The allowable loads have been increased for wind or earthquake loading with no further increase allowed.
2. Total uplift load and lateral load is based on tested anchor failure in the pier.
3. Allowable loads are based on either a 16" square grout-filled CMU pier with f'_m of 1,500 psi or a 16" square CMU shell filled with 3,000 psi concrete. A minimum of (4) #7 vertical rebars are required. The designer shall design and detail the CMU/concrete pier to resist all forces including uplift, shear, and moment.
4. Pier height per designer.
5. Side beam and main beam uplift loads assume DF members and are not additive.
6. The allowable loads listed for grout-filled CMU apply to solid concrete piers of 2,500 psi concrete a minimum of 16" square.
7. The allowable loads listed for CMU shell-filled with 3,000 psi concrete apply to solid concrete piers of 3,000 psi concrete a minimum of 14" square.
8. The ECCLQM-KT is a kit packaged with (2) MSTQM straps and (32) Strong-Drive® ¼" x 2½" SDS Heavy-Duty Connector screws. One strap may be installed on each face of the ECCLQM (as shown), using the Strong-Drive SDS Heavy-Duty Connector screws into the beams and (26) 16d x 2½" nails (not provided) into the wall framing. The MSTQM strap's allowable tension load is 6,240 lb.
9. Any side stirrup not fully supported by grout- or concrete-filled CMU has an allowable down load of 7,000 lb.

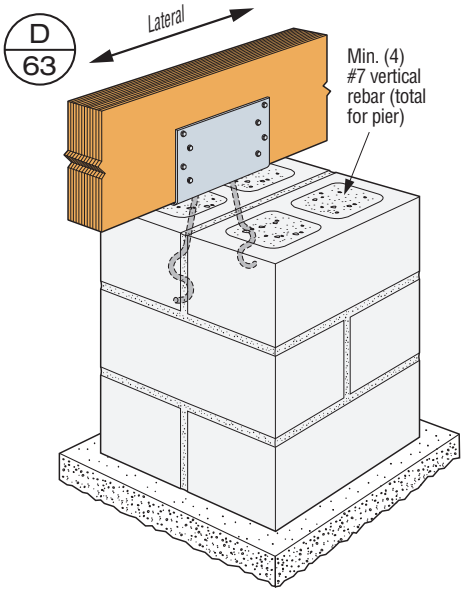

Typical CCQM Installation

D 64

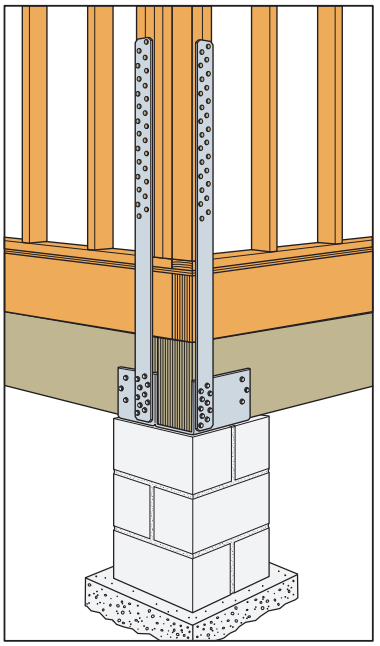

Typical ECCLQM Installation

D 65

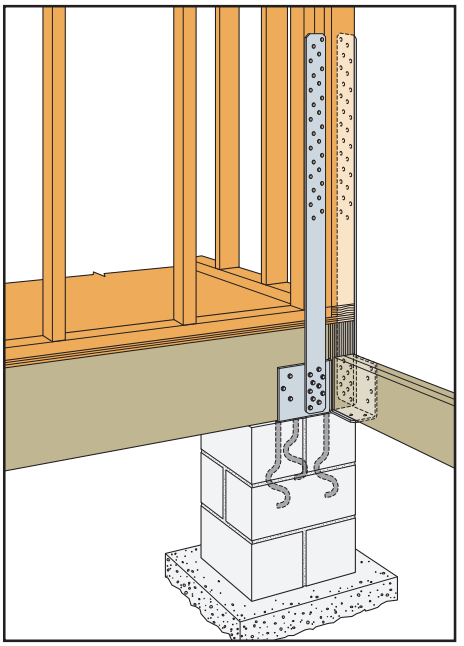

Typical ECCLRQMD-KT Installation

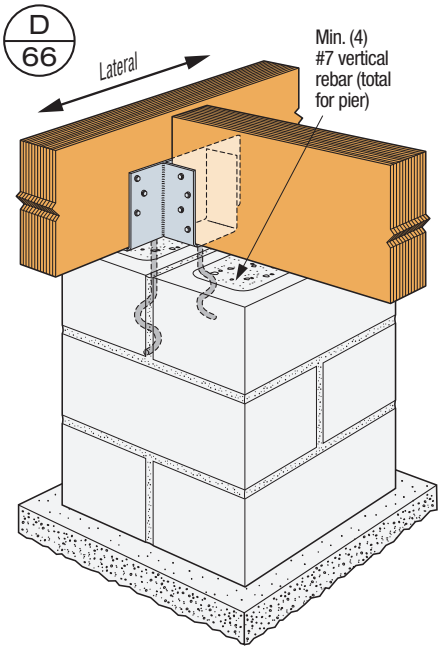

Typical CCTQM Installation

Beam to CMU or Concrete Pier (cont.)

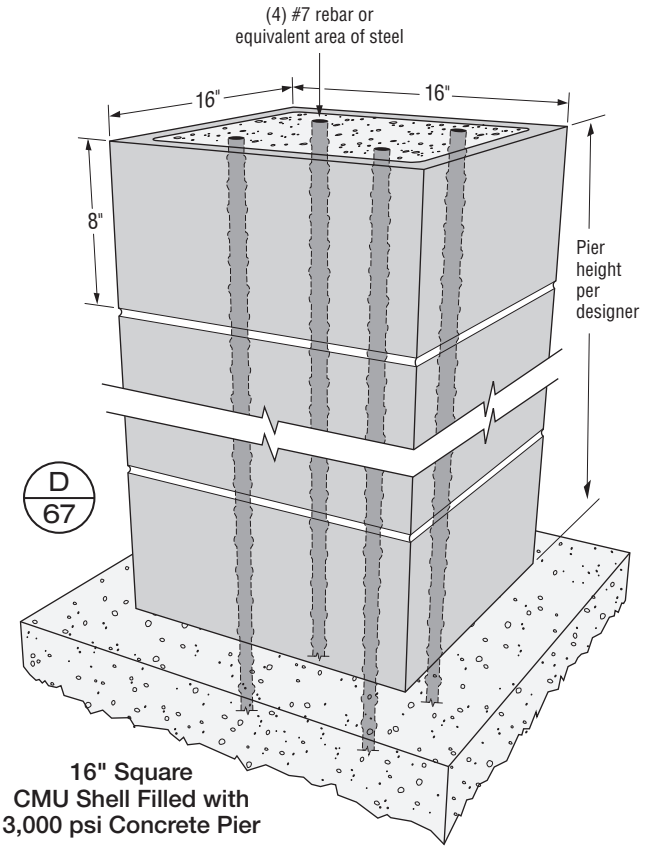

16" Square CMU Shell Filled with 3,000 psi Concrete Pier

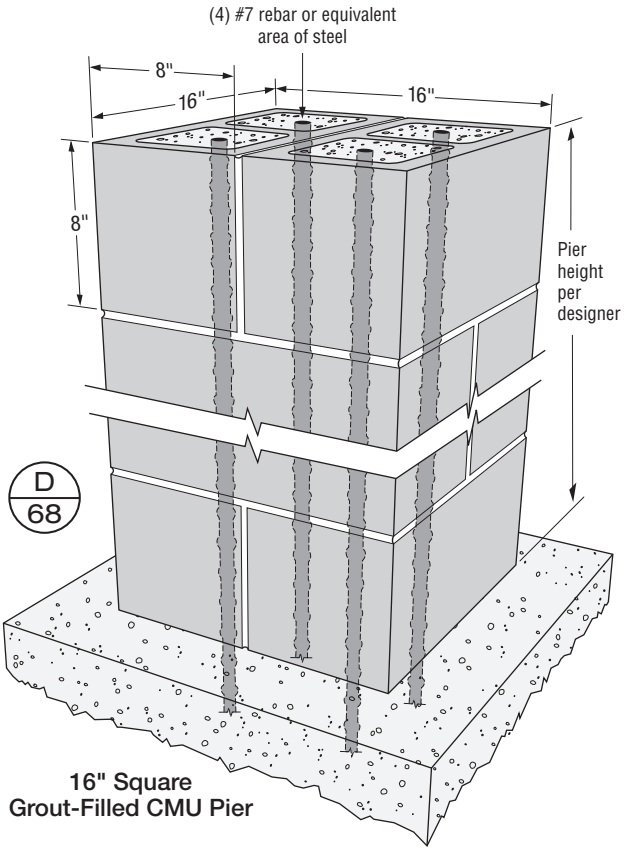

16" Square Grout-Filled CMU Pier

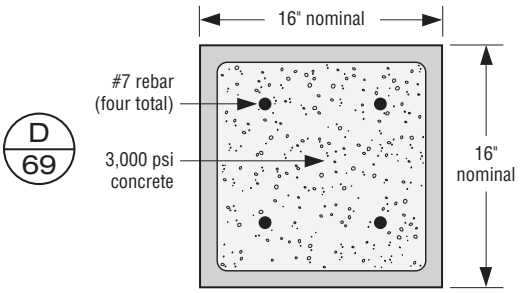

16" Square CMU Shell Filled with 3,000 psi Concrete Pier
(plan view)

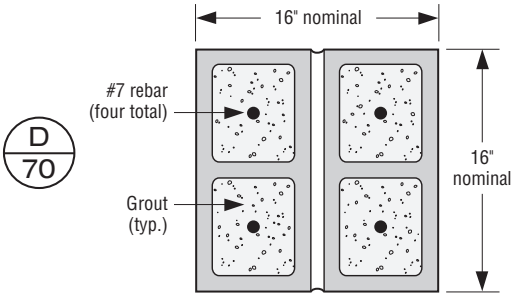

16" Square Grout-Filled CMU Pier
(plan view)

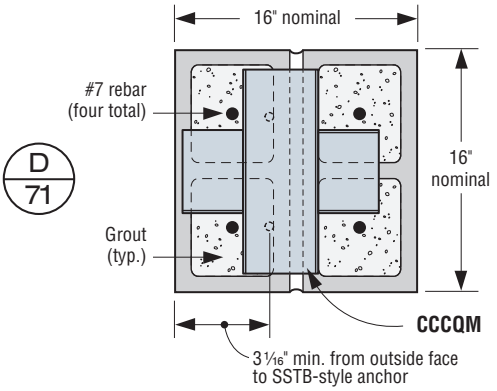

Main channel of CCCQM cannot be centered when installed into 16" grout-filled CMU piers. Layout considerations should be made accordingly.

CCCQM Installed on 16" Square Grout-Filled CMU
(plan view)

Wall to Pile/Girder

SS SD For details about these icons, see p. 11.

	Model No.	Qty. Req.	DF/SP Allowable Loads		SPF Allowable Loads	
			Fasteners (Total)	Uplift (160)	Fasteners (Total)	Uplift (160)
SS	LTS12[7]	1	(12) 0.148" x 1½"	660[6]	(12) 0.148" x 1½"	555
SS	A35	1	(12) 0.131" x 1½"	650	(12) 0.131" x 1½"	560
	DTT1Z	1	(8) 0.148" x 1½"	910	(8) 0.148" x 1½"	850
SS	MTS12[7]	1	(14) 0.148" x 1½"	990	(14) 0.148" x 1½"	850
SS	HTSQ16ZKT	1	(8) ¼ x 1½" SDS	1,145	(8) ¼ x 1½" SDS	800
SS	LSTA21	1	(14) 0.148" x 2½"	1,235	(14) 0.148" x 2½"	1,110
SS	HTS16[7]	1	(16) 0.148" x 1½"	1,445[6]	(16) 0.148" x 1½"	1,215
SS	CS16	1	(20) 0.148" x 2½"	1,705	(22) 0.148" x 2½"	1,705
SS	PS218	2	(4) ¾" Bolts	1,740	(4) ¾" Bolts	1,385
SS	PS418	2	(4) ¾" Bolts	1,740	(4) ¾" Bolts	1,385
SS	DTT2Z	1	(8) ¼ x 1½" SDS	2,145	(8) ¼ x 1½" SDS	1,835
	PSQ218	2	(8) SDWH27400G	2,815	(8) SDWH27400G	2,420
	PSQ418	2	(8) SDWH27400G	3,045	(8) SDWH27400G	2,620
SS	PS720	2	(8) ½" Bolts	3,075	(8) ½" Bolts	2,645
	HTT4	1	(18) 0.148" x 1½"	3,610	(18) 0.148" x 1½"	3,105
	HTT5	1	(26) 0.148" x 1½"	4,350	(26) 0.148" x 1½"	3,740
	MSTC66B3Z[5]	1	(56) 0.148" x 3"	4,490	(56) 0.148" x 3"	4,490
SS	HST2	2	(6) ⅝" Bolts	5,220	(6) ⅝" Bolts	4,835
SS	HST5	2	(12) ⅝" Bolts	10,650	(12) ⅝" Bolts	9,870

1. Loads are based on 11¼" girder depth. See the current Simpson Strong-Tie® *Wood Construction Connectors* catalog for other options.
2. PS and HST are for pile-to-girder applications only and installed in pairs. Published loads are governed by double shear perp-to-grain bolt calculations using a minimum member thickness of 3½". Alternate values may be calculated per the NDS for other girder and pile widths. Straps must be centered about splice joint, and bolt edge and end distances must meet the NDS minimum requirements.
3. For straight straps, use half the total number of fasteners listed on each member in the connection.
4. Refer to pp. 8–10 for corrosion considerations.
5. Where noted, multiply loads by 1.85 to attain an allowable load for installations where two straps have been installed with a 1½" clear space between straps.
6. Where noted, allowable uplift loads in table are for SP. For DF, LTS12 = 645 lb. (160), HTS16 = 1,415 lb. (160).
7. Longer twist straps may be used to achieve same loads where framing dictates it is necessary.

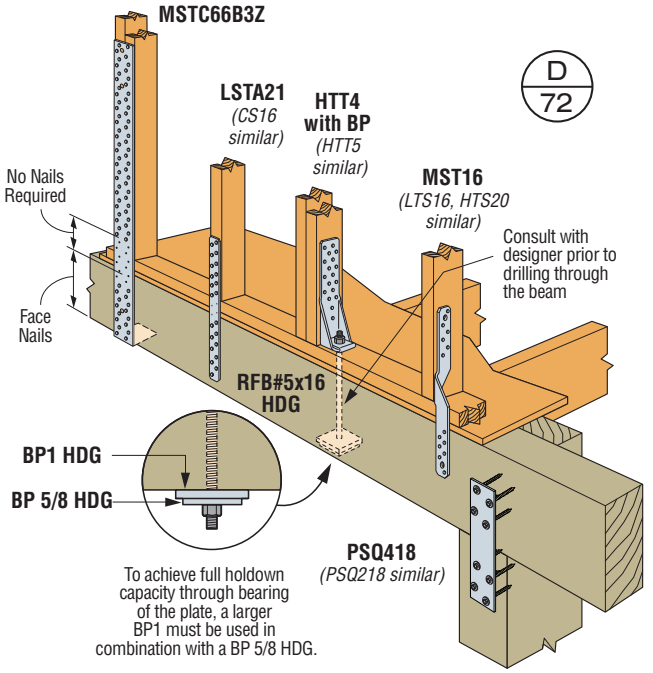

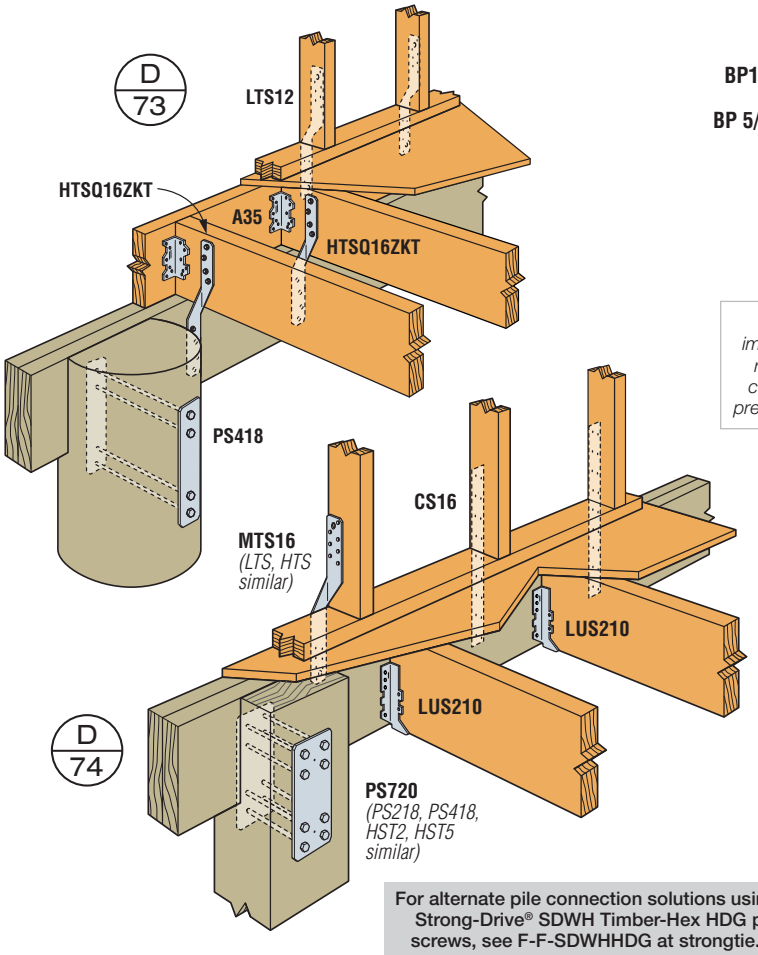

Refer to pp. 8–10 for important considerations regarding coatings on connectors attached to preservative-treated wood.

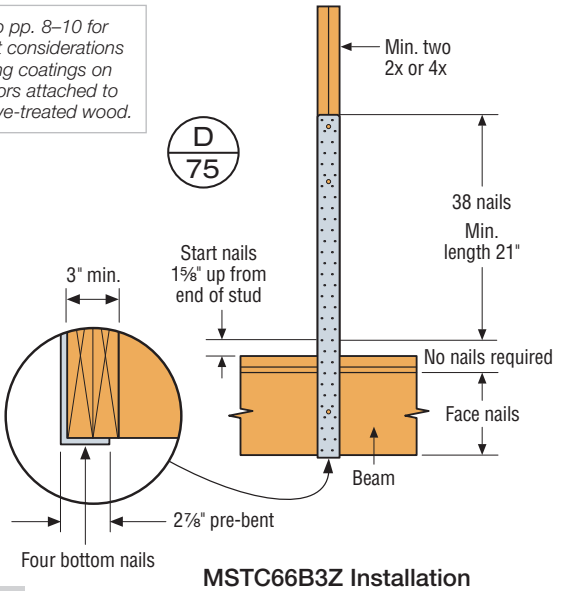

MSTC66B3Z Installation with no Rim Board
(MSTC48B3 similar)

For alternate pile connection solutions using only Strong-Drive® SDWH Timber-Hex HDG piling screws, see F-F-SDWHHDG at strongtie.com.

Post/Column to Beam

SS SD For details about these icons, see p. 11.

	Model No.	Qty. Req.	Fasteners		DF/SP Allowable Loads		SPF Allowable Loads
			Beam	Post	Uplift (160)	Lateral F_1 (160)	Uplift (160)
	4x4 Post/column to 4x beam						
SS	BC4	1	(6) 0.162" x 3½"	(6) 0.162" x 3½"	605	1,000	520
	LPC4Z[2]	2	(8) 0.148" x 3"	(8) 0.148" x 3"	755	760	650
	EPC4Z	1	(10) 0.148" x 3"	(8) 0.148" x 3"	1,130	1,230	970
	PC4Z	1	(10) 0.148" x 3"	(8) 0.148" x 3"	1,480	1,260	1,275
SS	CC44	1	(2) ⅝" Bolts	(2) ⅝" Bolts	1,850	—	1,590
SS	ECCU44	1	(2) ⅝" Bolts	(2) ⅝" Bolts	1,850	—	1,590
	CBT2Z[7]	1	(2) ½" x 3¼" dowel	(2) ½" x 3¼" dowel	2,020	750	—
SS	LCE4[2]	2	(14) 0.162" x 3½"	(10) 0.162" x 3½"	1,955	1,350	1,680
SS	AC4 (Max)[2]	2	(14) 0.162" x 3½"	(14) 0.162" x 3½"	2,490	1,475	2,140
SS	MSTA18	2	(28) 0.148" x 3"	(28) 0.148" x 3"	2,630	—	2,270
SS	ECCQ44-SDS2.5	1	(14) ¼" x 2½" SDS	(14) ¼" x 2½" SDS	3,785	—	2,725
SS	CCQ44SDS2.5	1	(16) ¼" x 2½" SDS	(14) ¼" x 2½" SDS	5,370	—	3,865
	4x6 Post/column to 4x beam						
	BC46	1	(12) 0.162" x 3½"	(6) 0.162" x 3½"	945	1,000	815
	EPC4Z	1	(10) 0.148" x 3"	(8) 0.148" x 3"	1,130	1,075	970
	PC4Z	1	(10) 0.148" x 3"	(8) 0.148" x 3"	1,480	1,260	1,275
	CC46	1	(4) ⅝" Bolts	(2) ⅝" Bolts	2,800	—	—
SS	ECCQ46-SDS2.5	1	(14) ¼" x 2½" SDS	(14) ¼" x 2½" SDS	3,785	—	2,725
SS	CCQ46SDS2.5	1	(16) ¼"x2½" SDS	(14) ¼"x2½" SDS	6,785	—	4,885
	6x6 Post/column to 6X beam						
	LPC6Z[2]	2	(8) 0.148" x 3"	(8) 0.148" x 3"	920	885	790
SS	BC6	1	(12) 0.162" x 3½"	(12) 0.162" x 3½"	1,185	1,825	1,020
	EPC6Z	1	(10) 0.148" x 3"	(8) 0.148" x 3"	1,435	1,230	1,235
	PC6Z	1	(10) 0.148" x 3"	(8) 0.148" x 3"	1,480	1,260	1,275
SS	LCE4[2]	2	(14) 0.162" x 3½"	(10) 0.162" x 3½"	1,955	1,350	1,680
SS	AC6 (Max)[2]	2	(14) 0.162" x 3½"	(14) 0.162" x 3½"	2,815	2,075	2,420
SS	ECCQ66-SDS2.5	1	(14) ¼" x 2½" SDS	(14) ¼" x 2½" SDS	3,785	—	2,725
	CBT4Z[7]	1	(3) ½" x 3¼" dowel	(3) ½" x 3¼" dowel	4,215	1,655	—
SS	CC66	1	(4) ⅝" Bolts	(2) ⅝" Bolts	5,545	—	—
SS	ECCU66	1	(4) ⅝" Bolts	(2) ⅝" Bolts	5,545	—	4,770
SS	CCQ66SDS2.5	1	(16) ¼"x2½" SDS	(14) ¼"x2½" SDS	6,785	—	4,885
	4x4 Post/column to two (2x) beam						
SS	BCS2-3/6SS[6]	1	(12) 0.162" x 3½"SS	(6) 0.148" x 3"SS	525	1,055	—
SS	BCS2-2/4SS[6]	1	(8) 0.148" x 3"SS	(6) 0.148" x 3"SS	575	850	—
SS	BCS2-2/4	1	(8) 0.148" x 3"	(6) 0.148" x 3"	895	890	770
SS	BCS2-3/6	1	(12) 0.162" x 3½"	(6) 0.162" x 3½"	895	1,330	770
	EPC4Z	1	(10) 0.148" x 3"	(8) 0.148" x 3"	1,130	895	970
	PC4Z	1	(10) 0.148" x 3"	(8) 0.148" x 3"	1,480	1,120	1,275
	CBT2Z[7]	1	(2) ½" x 3¼" dowel	(2) ½" x 3¼" dowel	1,515	550	—
	ECCQ4.62-3.62SDS2.5	1	(16) ¼" x 2½" SDS	(14) ¼" x 2½" SDS	3,785	—	2,725
	CCQ4.62-3.62SDS2.5	1	(16) ¼" x 2½" SDS	(14) ¼" x 2½" SDS	5,370	—	3,865
	4x4 Post/column to 3⅛" beam						
SS	CC3 1/4-4	1	(4) ⅝" Bolts	(2) ⅝" Bolts	3,150	—	—
SS	ECCQ3-4SDS2.5	1	(14) ¼" x 2½" SDS	(14) ¼" x 2½" SDS	3,465	—	2,495
SS	CCQ3-4SDS2.5	1	(16) ¼" x 2½" SDS	(14) ¼" x 2½" SDS	5,370	—	3,865
	6x6 Post/column to 5⅛" beam						
SS	ECCQ5-6SDS2.5	1	(14) ¼" x 2½" SDS	(14) ¼" x 2½" SDS	5,355	—	3,855
	ECCU5 1/4-6	1	(4) ¾" Bolts	(2) ¾" Bolts	6,500	—	5,590
	CC5 1/4-6	1	(4) ¾" Bolts	(2) ¾" Bolts	6,500	—	5,590
SS	CCQ5-6SDS2.5	1	(16) ¼"x2½" SDS	(14) ¼"x2½" SDS	6,785	—	4,885

1. "—" in the tables indicates that the product has not been tested in the particular load direction listed.
2. Where noted, connectors must be installed in pairs to achieve listed loads.
3. For end conditions, specify ECCQ or ECCU when heavy column cap required.
4. Straps must use half the total fasteners in each member being connected to achieve the listed loads.
5. For SPF F_1 loads, multiply DF/SP F_1 loads by 0.86.
6. Where noted, higher allowable loads possible with Simpson Strong-Tie stainless steel ring-shank nails. See **strongtie.com** for more info.
7. Where noted, values shown are for continuous beam. See **strongtie.com** for end-of-beam and spliced-beam installations.

Refer to pp.8–10 for important considerations regarding coatings on connectors attached to preservative-treated wood.

D 76

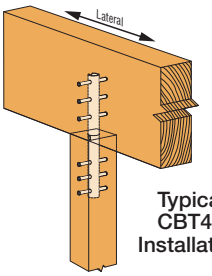

Typical CBT4Z Installation

D 77

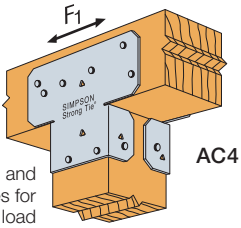

AC4

Fill all round and triangle holes for maximum load

D 78

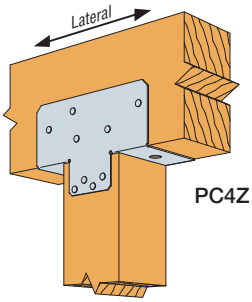

PC4Z

D 79

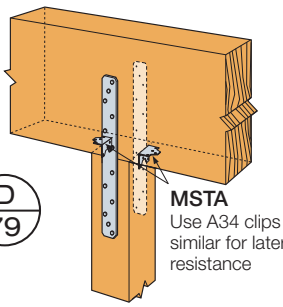

MSTA
Use A34 clips or similar for lateral resistance

D 80

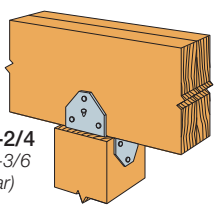

BCS2-2/4
(BCS2-3/6 similar)

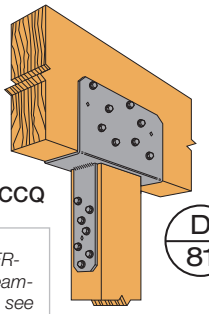

CCQ

D 81

For SDWH TIMBER-HEX HDG screw beam-to-post connection, see C-F-2019TECHSUP.

Beam to Corner Post/Column

SS SD For details about these icons, see p. 11.

Series	Allowable Loads				
	Uplift (160)			Download (100)	
	Main Beam	Side Beam	Total[3]	Side Beam	Total
ECCLQ-SDS2.5	2,735	1,840	3,795	6,530	Refer to note #5
CCCQ-SDS2.5	4,780	2,390[2]	4,780	7,000	
CCTQ-SDS2.5	4,910	2,350	5,315	7,000	

1. Uplift loads have been increased for wind or seismic; reduce where other loads govern. Downloads may not be increased.
2. Allowable load is per seat. Side beams must be loaded symmetrically for the CCCQ.
3. The combined uplift loads applied to all beams in the connector must not exceed the total allowable uplift load listed in the table.
4. The ECCLQ side beam may use a side beam uplift load up to 2,350 lb. The deflection of this load may exceed the standard ⅛" deflection by an additional ⅛".
5. The combined download for all of the carried beams shall not exceed the allowable download for the unmodified product in the current Simpson Strong-Tie® *Wood Construction Connectors* catalog (CCQ load for CCCQ and CCTQ, or ECCQ load for ECCLQ). The download for each side beam shall not exceed the lesser of 35% of the allowable download or 9,265 lb. for the unmodified product.
6. The download to each side beam shall not exceed the allowable load shown, nor 35% of the allowable load for the unmodified product, whichever is lower.
7. Column width in the direction of the beam width must be the same as the main beam width (W_1).
8. Refer to T-CCQLTC-WS for ordering instructions.

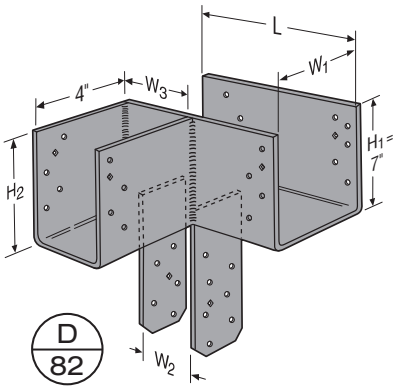

ECCLQ-SDS2.5
(Left direction shown)

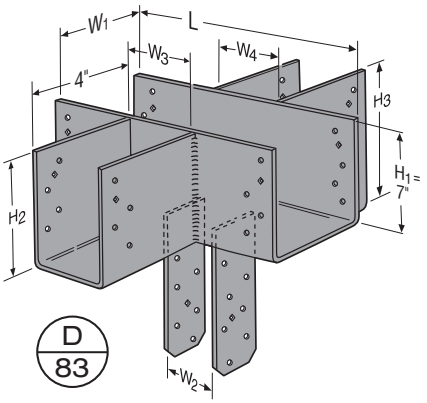

CCCQ-SDS2.5

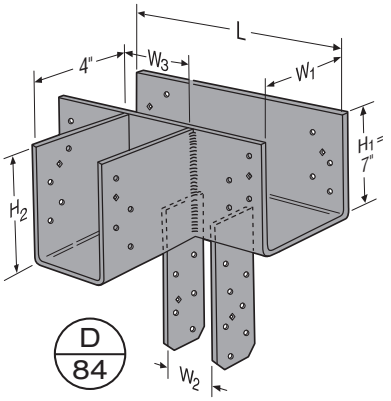

CCTQ-SDS2.5

Model No.	Dimensions (in.)		Total No. of Fasteners (in.)		DF/SP Uplift Loads (160)			SPF Uplift Loads (160)		
	W	L	Beam	Post	Side Beam	Main Beam	Post	Side Beam	Main Beam	Post
RTC44[1] (Mitered corner)	3 9/16	4¾	(16) 0.162 x 3½	(10) 0.162 x 3½	900	900	1,800	775	775	1,550
RTC44[2] (Square cut)	3 9/16	4¾	(16) 0.162 x 3½	(10) 0.162 x 3½	925	1,230	1,760	795	1,060	1,515
SS LCE4Z[1] (Mitered corner)	5⅜	5⅜	(14) 0.162 x 3½	(10) 0.162 x 3½	—	—	885	—	—	760

1. The allowable download for the mitered RTC44 and LCE4Z connection is limited to the bearing of the mitered beams on the post and shall be determined by the designer.
2. The allowable download for the main beam in the square-cut RTC44 connection is limited to the bearing of the beam on the post and shall be determined by the designer. The side beam allowable download is 1,170 lb.
3. The combined uplift loads applied to all the beams must not exceed the post allowable uplift load listed in the table.
4. Connectors must be installed in pairs to achieve listed loads.

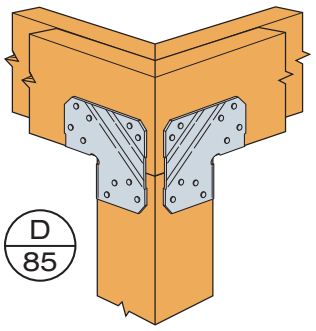

Typical LCE4Z Installation
(Mitered Corner)

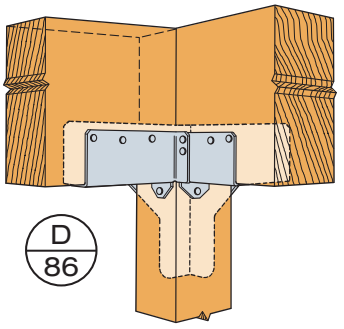

RTC44 Installation
(Square Cut)

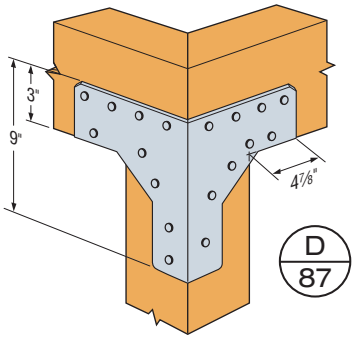

RTC44 Installation
(Mitered Corner)

Post/Column to Foundation

SS SD For details about these icons, see p. 11.

	Model No.[6]	Anchor Diameter	Fasteners to Wood	DF/SP Allowable Loads	
				Uplift	Download
				(160)	(100)
	4x4 Post/column bases				
	CPT44Z	½"	(3) ½" x 2¾" dowel	505[7]	9,805
	ABA44Z	½"	(6) 0.148" x 3"	725	5,660
	PB44	Embed	(12) 0.162" x 3½"	850	19,020
	ABW44Z	½"	(8) 0.148" x 3"	1,005	7,180
	PBS44A	Embed	(14) 0.162" x 3½"	1,235	10,975
	PPB44-4Z	Embed	(12) 0.148" x 3"	1,420	7,830
SS	ABU44Z	⅝"	(12) 0.162" x 3½"	1,900	7,570
	PPB44-6Z	Embed	(12) 0.148" x 3"	2,105	10,505
	RPBZ[9]	⅜"	(8) ¼" x 1½" SDS	2,235	—[9]
	HTT4	⅝"	(18) 0.148" x 1½"	3,610	—[10]
	HTT4	⅝"	(18) 0.162" x 2½"	4,235	—[10]
	HTT5	⅝"	(26) 0.148" x 1½"	4,350	—[10]
	CPS4	⅝"	(4) 0.148" x 3"	4,490	5,775
	HTT5	⅝"	(26) 0.148" x 3"	4,670	—[10]
	HTT5	⅝"	(26) 0.162" x 2½"	5,090	—[10]
	CBSQ44-SDS2	Embed	(14) ¼" x 2" SDS	5,390	10,975
SS	CB44	Embed	(2) ⅝" Bolts	6,445	—[10]
	6x6 Post/column bases				
	CPT66Z	½"	(3) ½" x 4¾" dowel	580[7]	19,840
	ABA66Z	⅝"	(8) 0.162" x 3½"	850	10,575
	PB66	Embed	(12) 0.162" x 3½"	850	30,250
	ABW66Z	½"	(12) 0.148" x 3"	1,190	12,935
	RPBZ[9]	⅜"	(8) ¼" x 1½" SDS	2,235	—[9]
	PBS66	Embed	(14) 0.162" x 3½"	2,165	14,420
SS	ABU66Z	⅝"	(12) 0.162" x 3½"	2,475	18,205
	HTT4	⅝"	(18) 0.148" x 1½"	3,610	—[10]
	PBV6PC	⅝"	(4) ¼" x 3" SDS	See Note 4	8,255
	CBSQ66-SDS2	Embed	(14) ¼" x 2" SDS	4,375	14,420
	HTT4	⅝"	(18) 0.162" x 2½"	4,235	—[10]
	HTT5	⅝"	(26) 0.148" x 1½"	4,350	—[10]
	CPS6	⅝"	(4) 0.148" x 3"	4,490	9,355
	HTT5	⅝"	(26) 0.148" x 3"	4,670	—[10]
	HTT5	⅝"	(26) 0.162" x 2½"	5,090	—[10]
SS	CB66	Embed	(2) ⅝" Bolts	6,445	—[10]
	8x8 Post/column bases				
	CPT88Z	½"	(3) ½" x 4¾" dowel	625[7]	22,805
SS	ABU88Z	2⅝"	(18) 0.162" x 3½"	2,570	23,140
	CPS7	⅝"	(4) 0.148" x 3"	4,490	10,335
	CB88	Embed	(2) ¾" Bolts	6,445	—[10]

1. ATR — All-Thread Rod or Anchor Bolt. The designer must specify anchor type, length, and embedment. Refer to the Simpson Strong-Tie® Connector-Anchor Selector web app for guidance on selected products.
2. For multiple holdowns, verify the allowable tension capacity of the wood member.
3. Horizontal bolts and nails shall not be combined on connectors.
4. Allowable uplift for PBV6PC is 3,800 lb. based on a Ponderosa Pine round wood post.
5. For additional anchorage, placement conditions and installation instructions regarding these products, visit **strongtie.com**.
6. Additional nominal and rough post base sizes are available. Visit **strongtie.com**.
7. Uplift capacity shown is based on corner-flush edge condition using SET-3G® or SET-XP® anchoring adhesive with (2) ½"-diameter ATR anchors. Increased capacity is possible with cast-in-place anchorage by designer or increasing anchorage edge distances. See **strongtie.com** for more information.
8. Some of the bases/caps shown on this page and p. 37 have been tested to work with hollow columns. Simpson Strong-Tie has evaluated several post bases and caps installed on various manufacturers' laminated hollow columns. For load ratings and additional information, refer to **strongtie.com**.
9. Values shown are for RPBZ installed in pairs. Single part values available. Download is limited by wood properties unless installed with CPS stand-off. See **strongtie.com** for more info.
10. Download is limited by the wood properties.

Post bases other than the MPBZ do not provide adequate resistance to prevent members from rotating about the base and therefore are not recommended for non-top-supported installations such as fences, unbraced carports or a trellis.

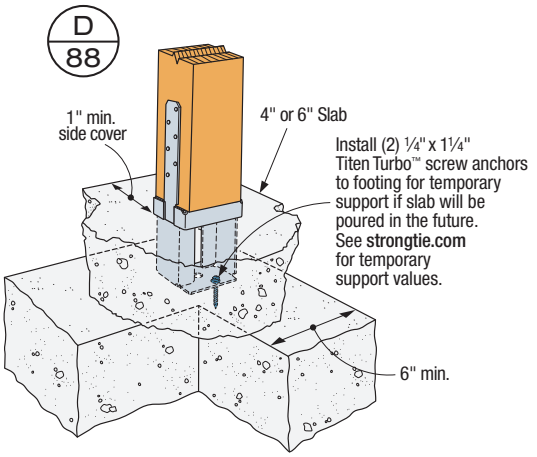

Typical PPB44-4Z Installation
(PPB44-6Z similar)

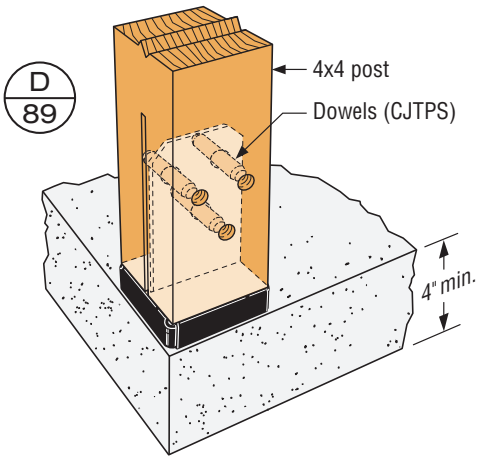

Typical CPT44Z Corner-Flush Edge Installation[7]
(CPT66Z and CPT88Z similar)

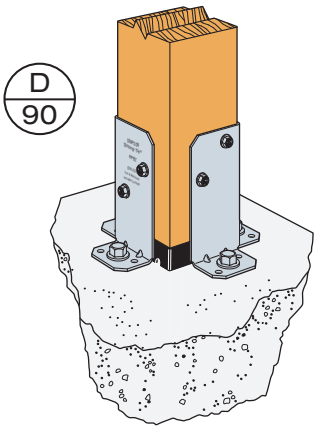

RPBZ Installation with CPS Away from Edge on Concrete

Post/Column to Foundation (cont.)

D 91

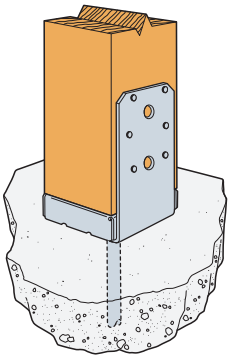

ABU44Z
(ABU66Z, ABU88Z similar)

D 92

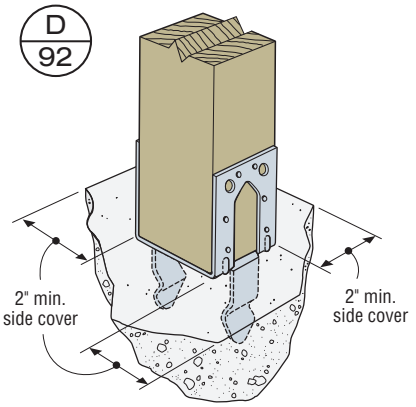

PB44Z
(PB66Z similar)

D 93

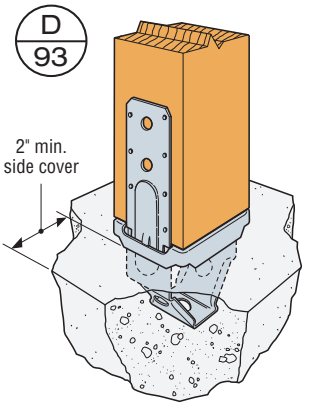

PBS44A

D 94

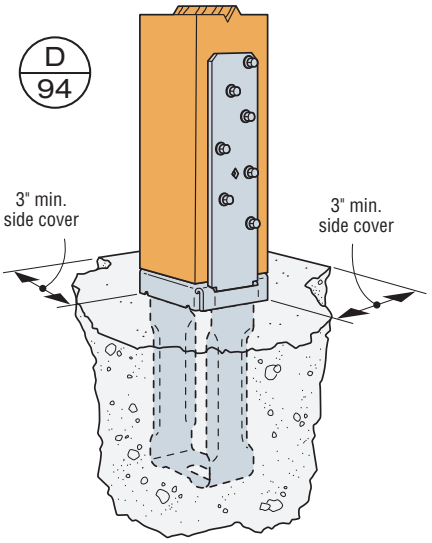

CBSQ44-SDS2
(CBSQ66-SDS2 similar)

D 95

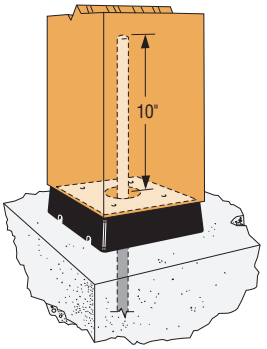

CPS4
(CPS6, CPS7 similar)

D 96

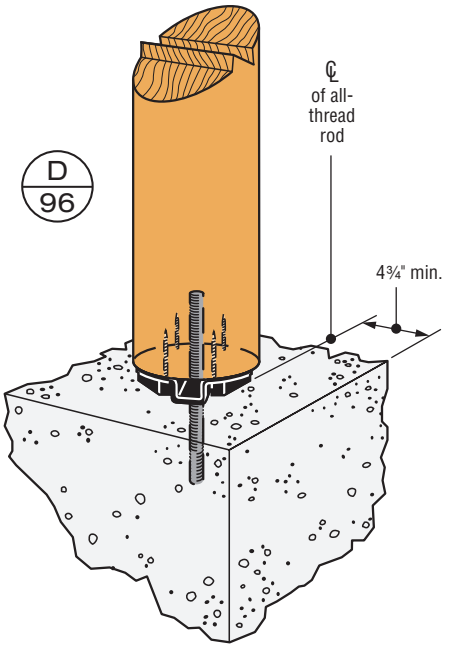

PBV6PC

Refer to pp. 8–10 for important considerations regarding coatings on connectors attached to preservative-treated wood.

For a post base that has high uplift and moment resistance, check out the MPBZ at strongtie.com/MPBZ.

CPS/PBV INSTALLATION:

Post:

- Drill a ¾"-diameter hole, 10" into the center of the post.
- Clean out dust. Fill hole halfway with Simpson Strong-Tie® SET-XP® or SET 3G® epoxy anchoring adhesive.
- Insert all-thread rod and allow epoxy to set and cure.
- Secure standoff to post using (4) 0.148" x 3" nails except PBV, which uses (4) Simpson Strong-Tie Strong-Drive® SDS Heavy-Duty Connector screws.

Concrete:

- Drill a ¾"-diameter hole per anchor design.
- Prepare anchor site per instructions on anchoring adhesive package, or refer to the *Anchoring, Fastening and Restoration Systems for Concrete and Masonry* catalog.
- Fill hole at least halfway with SET-XP or SET 3G epoxy anchoring adhesive, insert post subassembly into hole and allow to cure per cure schedule on adhesive packaging.
- Post bases do not provide adequate resistance to prevent members from rotating about the base and therefore are not recommended for non top-supported installations (such as fences or unbraced carports).

Roof Boundary Connection

Model No.	Type of Connection	Bending Angle	Fasteners		DF/SP Allowable Loads	SPF Allowable Loads
			To Wall	To Blocking	Lateral (F_1) (160)	Lateral (F_1) (160)
RBC	1	45° to 90°	(6) 0.148"x1½"	(6) 0.148"x1½"	445	380
	2	< 30°	(6) 0.148"x1½"	(6) 0.148"x1½"	435	375
		30° to 45°	(6) 0.148"x1½"	(6) 0.148"x1½"	465	400
	3	0° to 45°	(3) ¼"x2¼" Titen Turbo™[4]	(6) 0.148"x1½"	350	350

1. Allowable loads are for one anchor attached to blocking minimum 1½" thick.
2. RBC can be installed with up to ¾" gap and achieve 100% of the listed load.
3. Allowable loads have been increased for wind or earthquake loading with no further increase allowed. Reduce where other loads govern.
4. Hex-head model required. For concrete applications, use ¼" x 1¾" Titen Turbo screw anchors. Titen 2 may be substituted for Titen Turbo. See p. 64 for important information.
5. RBC installed over 1" foamboard has a load of 395 lb. (160) in a parallel-to-wall (F_1) load direction for Douglas Fir. For SPF, the load is 340 lb.
6. RBC may be installed over ½" structural sheathing using 0.148" x 1½" nails with no load reduction.
7. Refer to flier F-C-RBC for additional information.

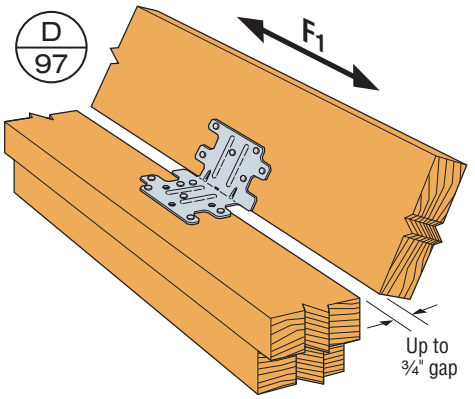

1 Typical RBC Installation

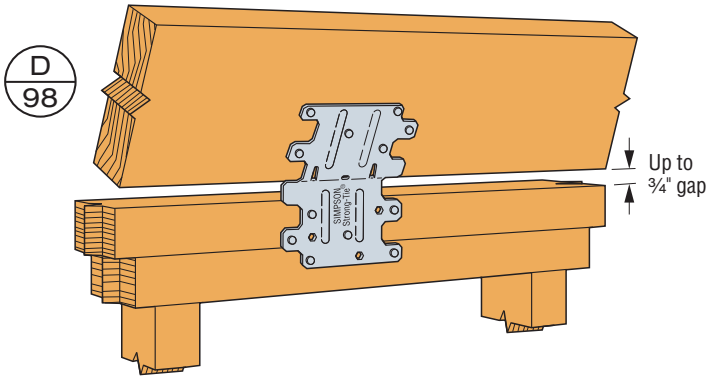

2 Typical RBC Installation

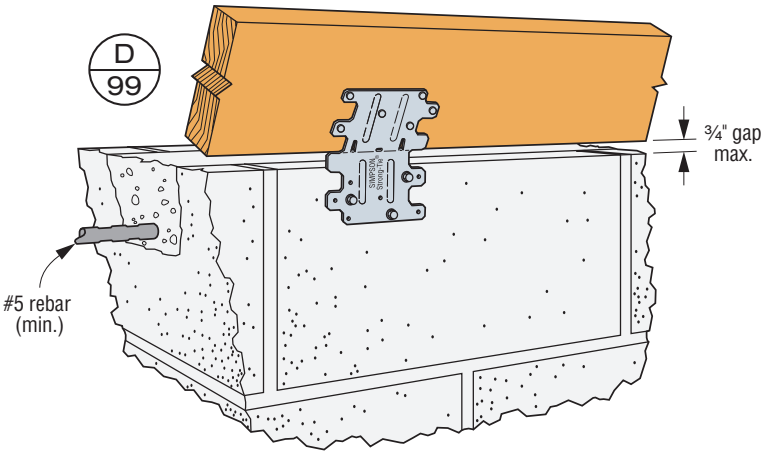

3 Typical RBC Installation to CMU Block

Lateral Load

SS SD For details about these icons, see p. 11.

	Model No.	Qty. Req.	Fasteners (Total)	DF/SP Allowable Loads	SPF Allowable Loads
				F_1	F_1
				(160)	(160)
SS	LS30	1	(6) 0.148" x 1½"	320	275
	GA1	1	(4) 0.148" x 1½"	350	300
SS	LS30	1	(6) 0.148"x3"	395	340
SS	A35	1	(12) SST PH612I #6 x ½"	420	360
	GA2	1	(6) 0.148" x 1½"	550	475
	LTP4 (vertical)	1	(12) 0.131" x 1½"	525	450
SS	A23	1	(8) 0.148" x 1½"	535	460
SS	A34	1	(8) 0.131" x 1½"	545	470
SS	LS50	1	(8) 0.148" x 1½"	560	480
	LTP5 (horizontal)	1	(12) 0.131" x 1½"	565	485
SS	LS70	1	(10) 0.148" x 1½"	645	555
SS	A35	1	(12) 0.131" x 1½"	650	560
	LTP4 (horizontal)	1	(12) 0.131" x 1½"	715	615
SS	LS50	1	(8) 0.148" x 3"	730	630
SS	LS90	1	(12) 0.148" x 1½"	890	765
SS	LS70	1	(10) 0.148" x 3"	915	785
SS	LS90	1	(12) 0.148"x3"	1,040	895

1. LTP4 (vertical) can be installed over ⅜" wood structural panel sheathing with 0.131" x 1½" nails and achieve 72% of the listed load, or over ½" and achieve 64% of the listed load. 0.131" x 2½" commons will achieve 100% load.
2. The LTP4 (horizontal) and LTP5 (horizontal) may be installed over wood structural panel sheathing up to ½" thick using 0.131" x 1½" nails with no reduction in load.
3. F_1 lateral loads are the direction that engage all fasteners in shear.

D 100

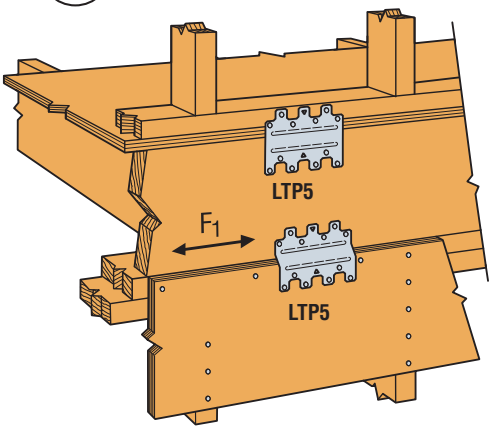

D 102

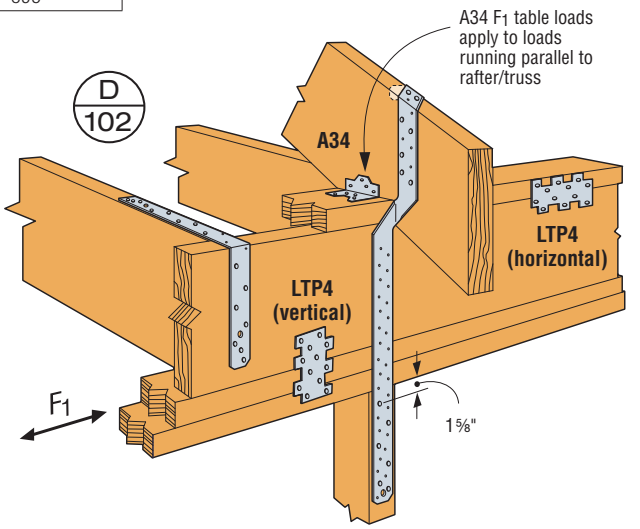

D 101

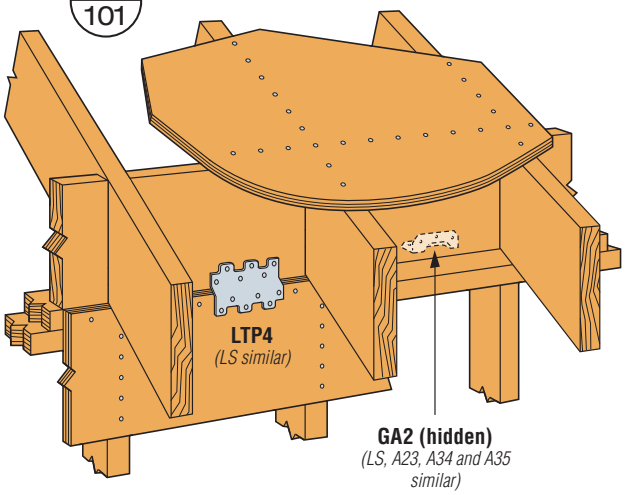

D 103

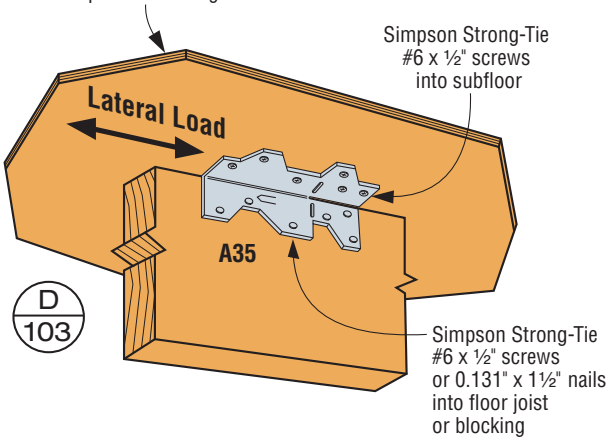

Holdowns

	Model No.	Qty. Req.	Anchor Diameter (in.)	Min. Wood Member Thickness[1] (in.)	Fasteners (Stud)	DF/SP Allowable Loads Uplift (160)	SPF Allowable Loads Uplift (160)
	DTT1Z	1	⅜	1½	(8) 0.148" x 1½"	910	850
SS	DTT2Z[8]	1	½	3	(8) ¼" x 1½" SDS	2,145	1,835
	LSTHD8/LSTHD8RJ	1	Embed	—	(20) 0.148" x 3¼"	2,590[2]	2,590[2]
	HDU2-SDS2.5	1	⅝	3	(6) ¼" x 2½" SDS	3,075	2,215
	HD3B	1	⅝	3	(2) ⅝" Bolts[6]	3,130	3,050
	HTT4	1	⅝	3	(18) 0.148" x 1½"	3,610	3,105
SS	HD5SS[11]	1	⅝	3	(2) ¾" Bolts[6]	3,850	3,275
	STHD10/STHD10RJ	1	Embed	—	(24) 0.148" x 3¼"	4,075[3]	4,075[3]
	HTT4	1	⅝	3	(18) 0.162" x 2½"	4,235	3,640
	HTT5	1	⅝	3	(26) 0.148" x 1½"	4,350	3,740
	HD5B	1	⅝	3	(2) ¾" Bolts[6]	4,505	3,785
	HDU4-SDS2.5	1	⅝	3	(10) ¼" x 2½" SDS	4,565	3,285
	HTT5	1	⅝	3	(26) 0.148" x 3"	4,670	4,015
	HTT5	1	⅝	3	(26) 0.162" x 2½"	5,090[10]	4,375[10]
	STHD14/STHD14RJ	1	Embed	—	(30) 0.148" x 3¼"	5,285[4]	5,285[4]
	HTT5KT	1	⅝	3	(26) #10 x 2½" SD	5,445	5,360
	HDU5-SDS2.5	1	⅝	3	(14) ¼" x 2½" SDS	5,645	4,340
SS	HD7SS[11]	1	⅞ or 1	3	(3) ⅞" Bolts[6]	6,480	5,510
	HD7B	1	⅞	3	(3) ¾" Bolts[6]	6,645	5,650
	HDU8-SDS2.5	1	⅞	4½	(20) ¼" x 2½" SDS	7,870	6,580
	HDQ8-SDS3	1	⅞	4½	(20) ¼" x 3" SDS	9,230	7,020
	HD9B	1	⅞	4½	(3) ⅞" Bolts[6]	9,920	8,430
SS	HHDQ11SS-SDS2.5[11]	1	1	5½	(24) ¼" x 2½" SDS	10,385	8,930
	HDU11-SDS2.5	1	1	7¼	(30) ¼" x 2½" SDS	11,175	9,610
SS	HD9SS[11]	1	⅞ or 1	4½	(3) 1" Bolts[6]	12,100	10,285
	HDU14-SDS2.5[9]	1	1	7¼	(36) ¼" x 2½" SDS	14,390[9]	12,375[9]
	HD19	1	1¼	7¼	(5) 1" Bolts[6]	19,360	15,270

1. See the current Simpson Strong-Tie® *Wood Construction Connectors* catalog for load values based on different wood thickness. Post design by specifier.
2. Where noted in table, load listed is for 6" or 8" stem wall corner condition with ½" min. edge distance into non-cracked 2,500 psi concrete. For midwall condition, allowable load is 2,985 lb. for 6" or 8" stem wall. For end-of-wall condition, allowable load is 1,620 lb. for 6" stem wall (2,135 lb. for 8" stem wall).
3. Where noted in table, load listed is for 8" stem wall corner condition with ½" min. edge distance into non-cracked 2,500 psi concrete. For midwall condition, allowable load is 4,755 lb. For end-of-wall condition, allowable load is 3,015 lb. See the current *Wood Construction Connectors* catalog for 6" stem wall loads.
4. Where noted in table, load listed is for 8" stem wall corner or midwall condition with ½" min. edge distance into non-cracked 2,500 psi concrete. For end-of-wall condition, allowable load is 4,410 lb. See the current *Wood Construction Connectors* catalog for 6" stem wall loads.
5. ATR — All-Thread Rod or Anchor Bolt. The designer must specify anchor type, length and embedment. Refer to our Post-to-Foundation designer web application for more information.
6. Lag bolts will not develop the listed loads.
7. STHD straps may be installed over ½" maximum wood structural panel sheathing. Installing STHD with StrapMate® strap holder reduces the possibility of concrete spalling.
8. For stainless steel, order DTT2SS.
9. HDU14 requires heavy hex anchor nut to achieve tabulated loads (supplied with holdown).
10. Allowable load for HTT5 with a BP⅝-2 bearing plate washer installed in the seat of the holdown is 5,295 lb. for DF/SP and 4,555 lb. for SPF/HF.
11. For more stainless-steel holdown load options as dictated by anchor diameter, wood member thickness and other factors, please reference L-C-SSHD at **strongtie.com**.

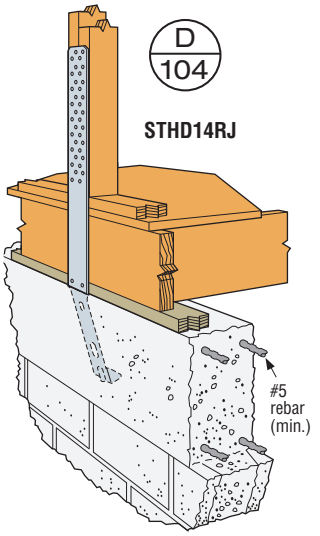

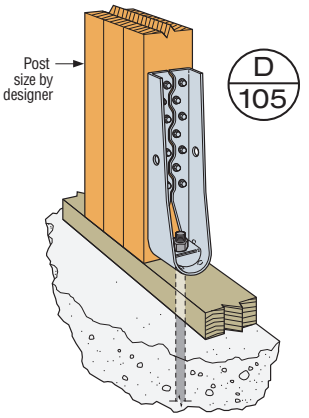

HDU5
(HDU2, HDU8, HDU11 and HDU14 similar)

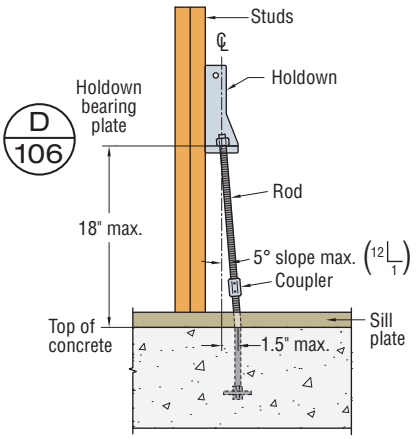

Holdown Raised Off Sill Plate

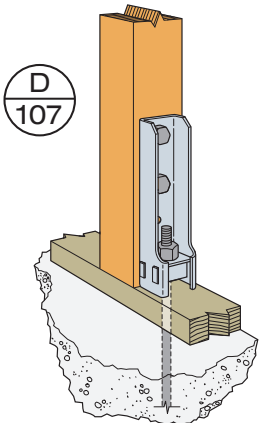

HD5B
(HD7B, HD9B similar)

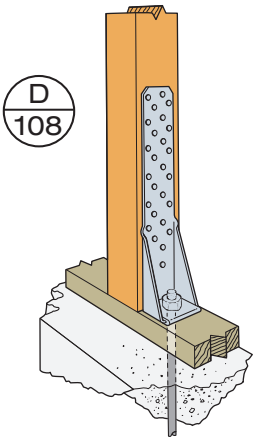

HTT5
(HTT4 similar)

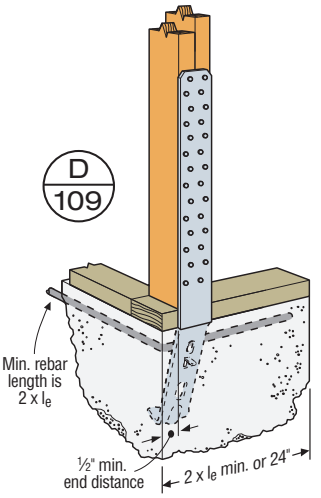

Typical STHD Corner Installation

Strong-Wall® Shearwalls

Simpson Strong-Tie® Strong-Wall® shearwalls provide design flexibility while offering high lateral-load capacities that are required in some building designs. Strong-Wall shearwall solutions increase the amount of allowable window opening space by 50% when compared to wider, site-built shearwalls with the same capacity. The gray areas below represent window openings made possible by Strong-Wall shearwalls.

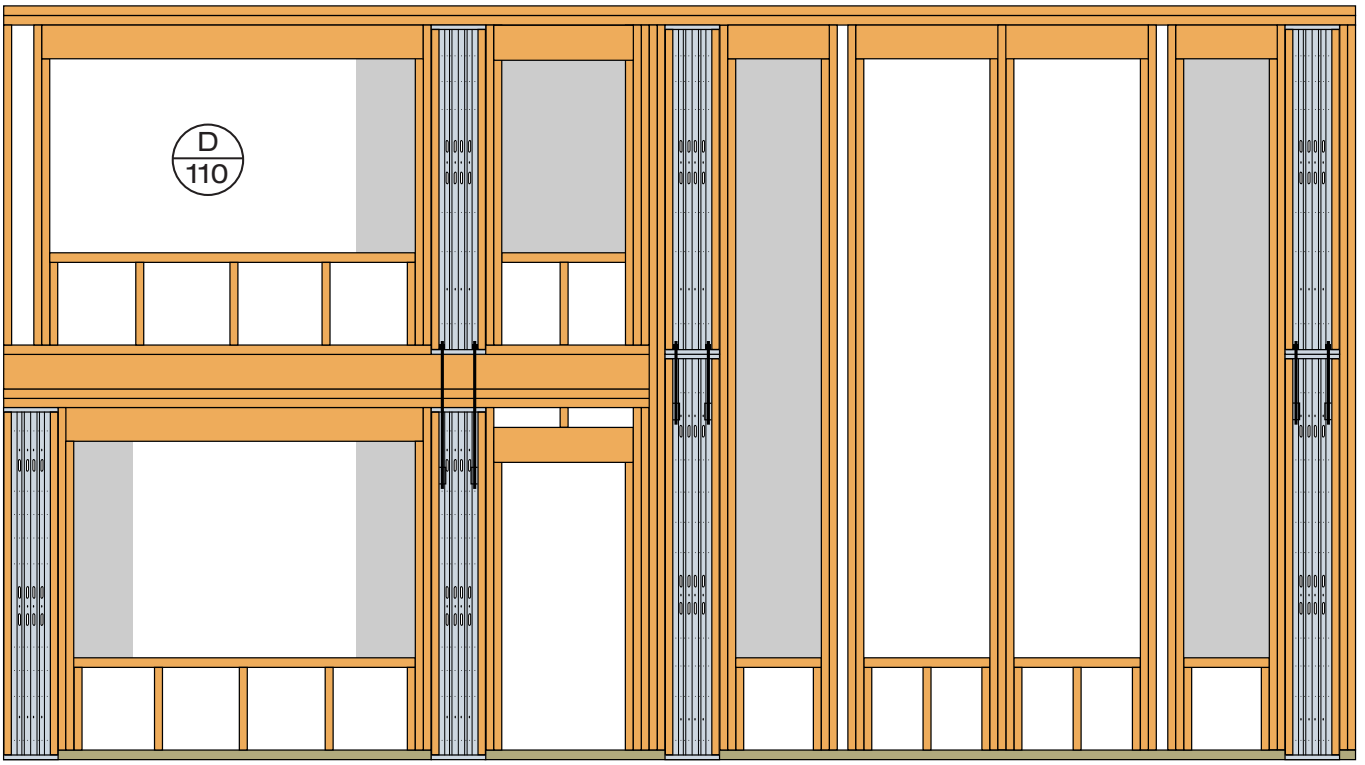

Uplift connectors not shown for clarity

Broad Variety of Shearwall Solutions

Steel Strong-Wall (SSW) and Strong-Wall wood shearwall (WSW) solutions combine superior performance with ease of installation for maximum design flexibility. For in-depth information about Strong-Wall shearwalls, visit **strongtie.com/strongwall**.

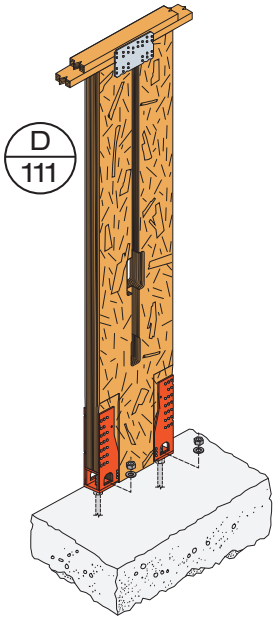

Strong-Wall Wood Shearwall for Standard and Balloon-Framing Applications up to 20'

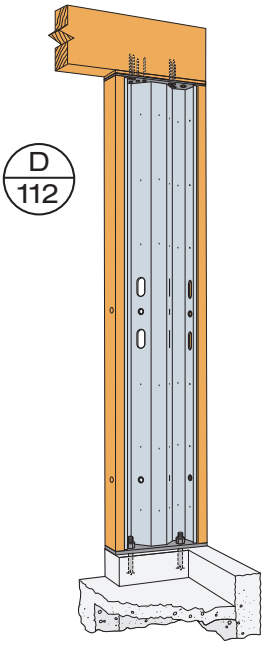

Garage Front Application
(Full-height and portal-frame options available)

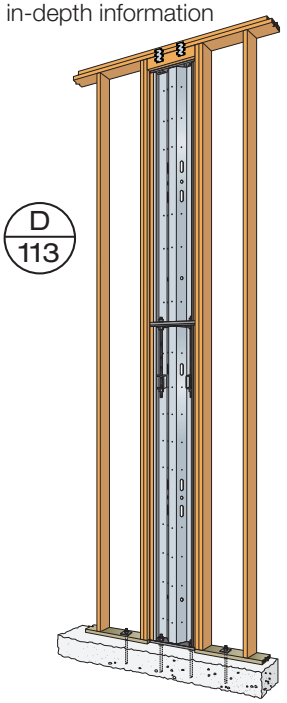

Balloon-Framing Applications up to 20'

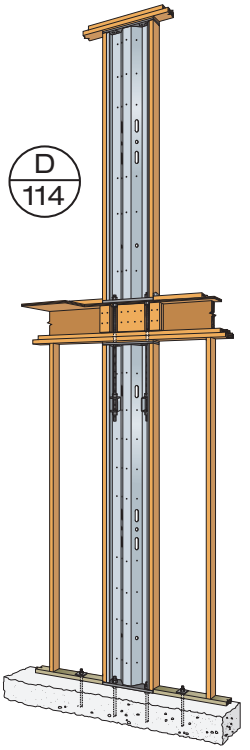

Two-Story Stacked-Wall Applications

Strong-Rod™ Uplift Restraint System

The Simpson Strong-Tie® Strong-Rod™ Uplift Restraint System for roofs (Strong-Rod URS) is a continuous rod tiedown solution designed to provide a complete load path to resist suction (uplift) pressure on the roof. After hurricane ties transfer roof uplift forces into the uppermost top plates in a wood-frame structure, a Strong-Rod URS continues to transmit that resistance down to the foundation or final termination point. Visit **strongtie.com/srs** for more information.

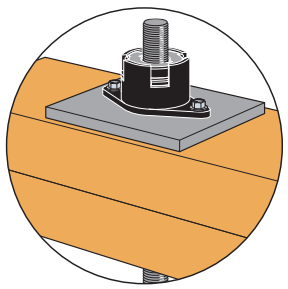

The RTUD allows for unlimited shrinkage. To quickly and easily make shrinkage estimates, use our Wood Shrinkage Calculator at **strongtie.com/software**.

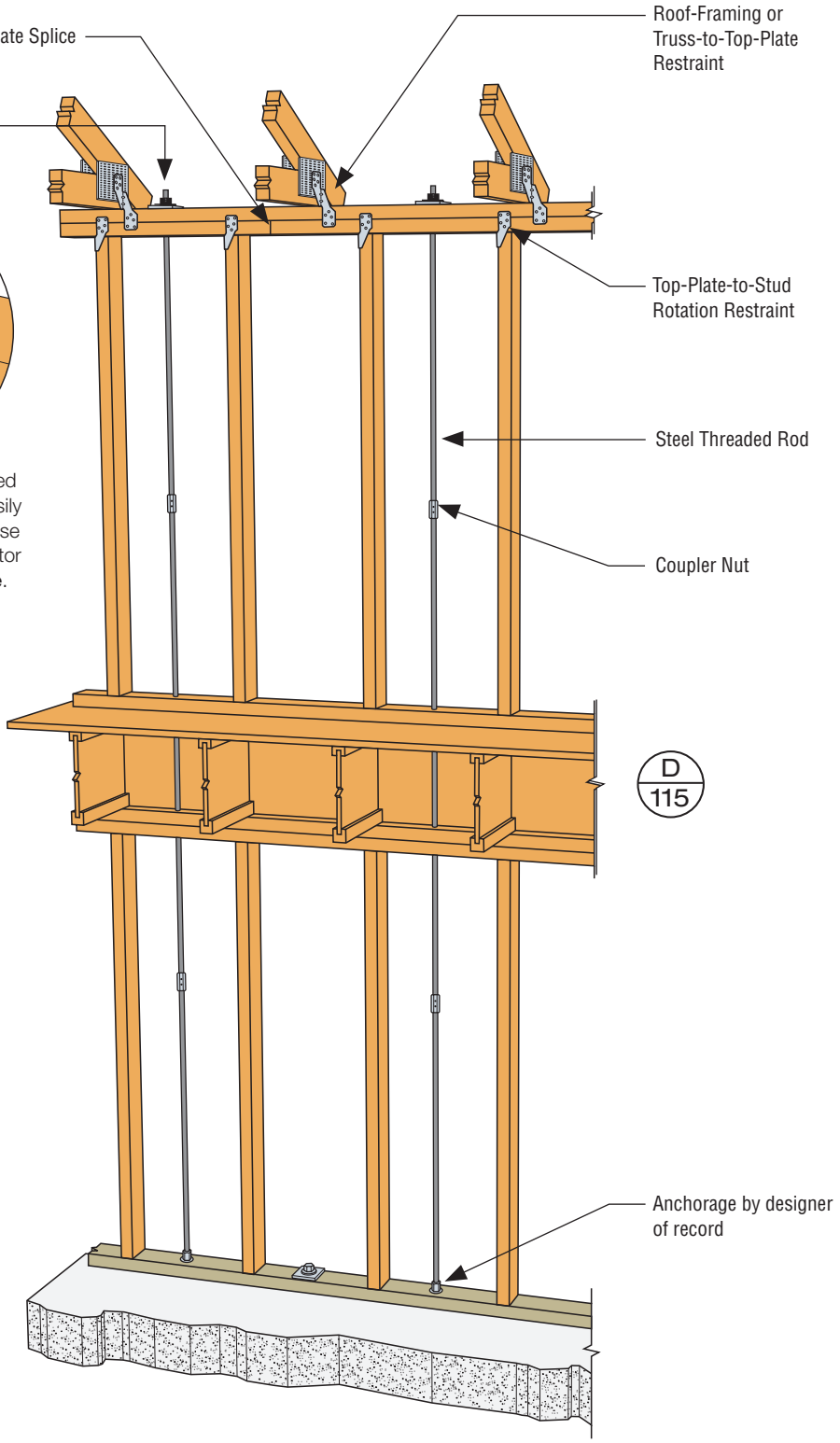

See our Strong-Rod Design Guide (F-L-SRS) for more information.

Gable End to Wall Framing

SS SD For details about these icons, see p. 11.

Model No.	Fasteners (Total)	DF/SP Allowable Loads				SPF Allowable Loads			
		Uplift	Parallel to End of Wall (F_1)	Perp. to End of Wall Toward Anchor (F_2)	Perp. to End of Wall Away from Anchor (F_2)	Uplift	Parallel to End of Wall (F_1)	Perp. to End of Wall Toward Anchor (F_2)	Perp. to End of Wall Away from Anchor (F_2)
		(160)	(160)	(160)	(160)	(160)	(160)	(160)	(160)
Shear Connections									
LTP4	(12) 0.131" x 1½"	—	625	—	—	—	540	—	—
LTP5	(12) 0.131" x 1½"	—	565	—	—	—	485	—	—
SS A34	(8) 0.131" x 1½"	—	545	430	—	—	470	370	—
SS A35	(12) 0.131" x 1½"	—	650	670	—	—	560	575	—
SS A34	(8) #9 x 1½" SD	240	640	495		170	550	425	
End-of-Wall Connections (Concrete/Masonry)									
RBC	(3) ¼" x 2¼" Titen Turbo™[6] (6) 0.148" x 1½"	—	350	—	—	—	350	—	—
HGAM10KTA	(4) ¼" x 1½" SDS (4) ¼" x 2¾" Titen Turbo[6]	810	875	1,105	640	585	630	795	460
LTA2	(10) 0.148" x 1½"	1,390[7]	950	220	220	990	800	220	220
HETA12[1]	(7) 0.148" x 1½"	1,345[8]	65	85	85	1,160	55	75	75
HETA20[1]	(10) 0.148" x 1½"	1,810	770	340	340	1,810	660	290	290
End-of-Wall Connections (Wood)									
HGA10KT	(4) ¼" x 1½" SDS	650	1,165	940	815	500	840	675	495
RBC	(12) 0.148" x 1½"	—	445	—	—	—	380	—	—
LSTA15	(6) 0.148" x 1½"	—	—	—	555	—	—	—	475
LSTA18	(8) 0.148" x 3"	—	—	—	740	—	—	—	635
LSTA21	(10) 0.148" x 3"	—	—	—	925	—	—	—	795
LSTA24	(12) 0.148" x 3"	—	—	—	1,110	—	—	—	955
LSTA30	(14) 0.148" x 3"	—	—	—	1,315	—	—	—	1,130

1. HETA will require a 30° bend and a 6" minimum strap embedment in a concrete tie beam only. See detail D/48. Loads based on SP lumber only. Strap may be bent one full cycle only.
2. Refer to Prescriptive Standards for spacing and construction of assembly shown in detail D118.
3. Straps must use half the total fasteners into each member being connected to achieve the listed loads.
4. LTP4 can be installed over ⅜" wood structural panel sheathing with 0.131" x 1½" nails and achieve 72% of the listed load, or more than ½" and achieve 64% of the listed load. 0.131" x 2½" commons will achieve 100% load.
5. The LTP5 may be installed over wood structural panel sheathing up to ½" thick using 0.131" x 1½" nails with no reduction in load.
6. Hex-head model required. For concrete applications, use ¼" x 1¾" Titen Turbo screw anchors. Titen 2 may be substituted for Titen Turbo. See p. 64 for important information.
7. LTA2 allowable uplift listed in table is based on SP lumber. Uplift load on DF is 1,180 lb.
8. HETA12 allowable uplift listed in table is based on SP lumber. Uplift load on DF is 1,455 lb.

Model No.	Qty. Req.	Fasteners per Connector		DF/SP Allowable Loads (160) Perpendicular to End of Wall (F_2)				SPF Allowable Loads (160) Perpendicular to End of Wall (F_2)			
				Toward GBC		Away from GBC		Toward GBC		Away from GBC	
		Gable Brace	Top Plates	Gable Brace Angle		Gable Brace Angle		Gable Brace Angle		Gable Brace Angle	
				40°–45°	46°–60°	40°–45°	46°–60°	40°–45°	46°–60°	40°–45°	46°–60°
GBC	2	(5) 0.131" x 1½"	(7) 0.131" x 2½	650	825	400	305	545	695	335	255

1. For 1¾" x 3½" (or larger) LVL gable brace, the allowable load at 40°–45° is 635 lb. toward anchors, 515 lb. away from anchors.
2. Use minimum 2x4 gable brace. Larger members may be used or required.
3. Connection of gable brace to roof diaphram is by the designer.
4. Gable brace should be flush with inside edge of top plates as shown.

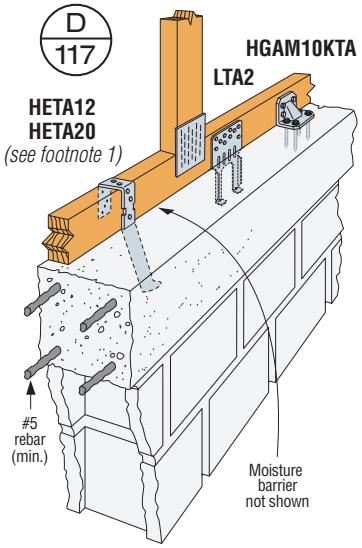

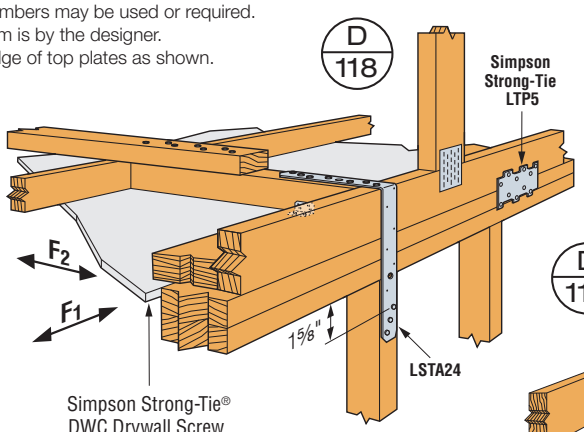

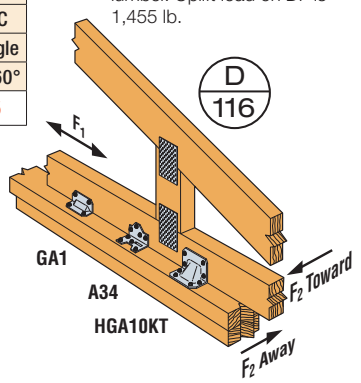

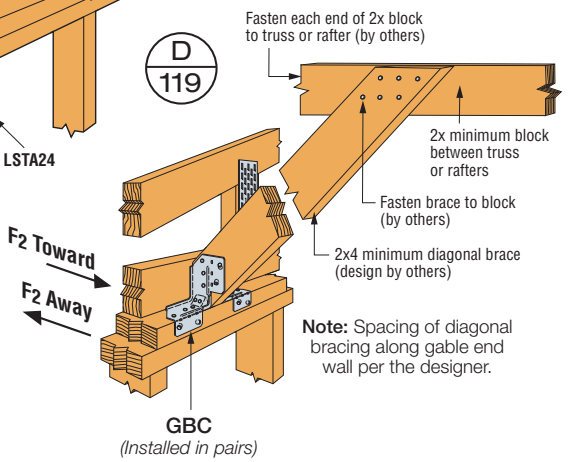

Note: Spacing of diagonal bracing along gable end wall per the designer.

Valley Truss to Roof Framing

SD For details about this icon, see p. 11.

Model No.	Fasteners		Supporting Roof Pitch	DF/SP Allowable Loads		SPF/HF Allowable Loads	
	Supporting Framing	Valley Truss		Uplift[2] (160)	Download[4,7]	Uplift[2] (160)	Download[5,7]
VTCR	(4) 0.148" x 3"	(3) 0.148" x 1½"	< 4/12	370	790	320	655
			4/12 to 12/12	370	790	320	655
	(4) #9 x 2½" SD	(3) #9 x 1½" SD	< 4/12	390	790	335	655
			4/12 to 12/12	495	790	425	655

1. Loads are based on installation over 7/16" or 15/32" sheathing. For installation over 19/32" or 5/8" sheathing, allowable uplift loads are 285 lb. (DF/SP) and 245 lb. (SPF/HF) when installed with nails, or 370 lb. (DF/SP) and 320 lb. (SPF/HF) when installed with screws.
2. When attached directly to the supporting framing with either screws or nails, the allowable uplift for pitches less than 4:12 is 240 lb. (DF/SP) and 205 lb. (SPF/HF). For pitches 4:12 to 12:12, use the tabulated uplift loads.
3. Allowable uplift loads are based on the lower of the test loads at 3/16" deflection or the ultimate load divided by 3.
4. Southern Pine allowable download is 750 lb.
5. Hem-Fir allowable download is 625 lb.
6. When the valley truss and supporting framing are of different species, use the lower tabulated values
7. No duration of load adjustment permitted.

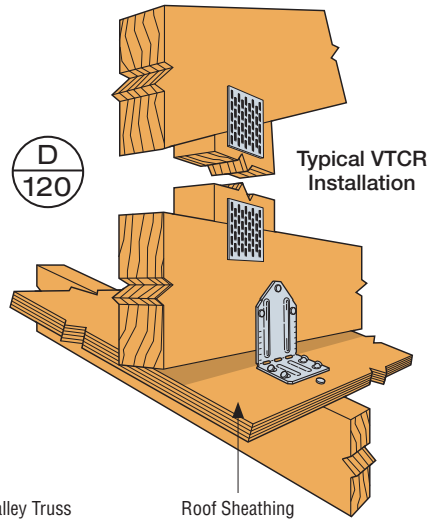

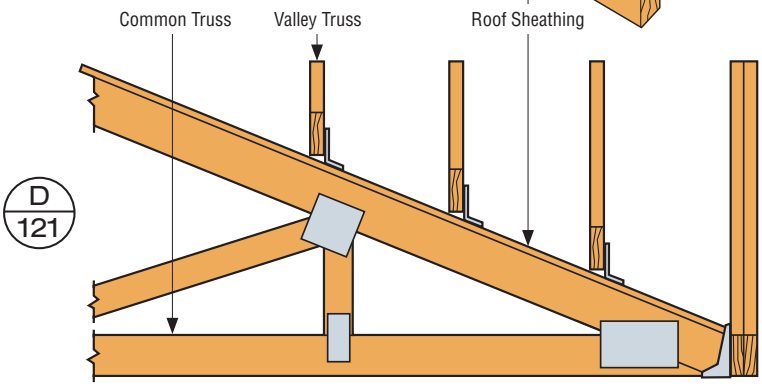

Typical VTCR Installation – Side View

Drag Strut Connection

Model No.	L (in.)	Fasteners	DF/SP Allowable Loads		SPF/HF Allowable Loads	
			Compression (160)	Tension (160)	Compression (160)	Tension (160)
DSC2R/L-SDS3	16	(20) ¼" x 3" SDS	2,590	3,720	2,225	3,200
DSC5R/L-SDS3	21	(24) ¼" x 3" SDS	4,340	4,195	3,730	3,610

1. Simpson Strong-Tie® Strong-Drive® SDS Heavy-Duty Connector screws' minimum penetration is 2¾", minimum end distance is 2½" for DSC2 and 3¾" for DSC5 and minimum edge distance is 5/8" for full load values.
2. Simpson Strong-Tie Strong-Drive SDS Heavy-Duty Connector screws are permitted to be installed through metal truss plates as approved by the truss designer, provided the requirements of ANSI/TPI 1-2014 section 7.5.3.4 and 8.9.2 are met (predrilling required through the plate using a maximum of 5/32" bit).

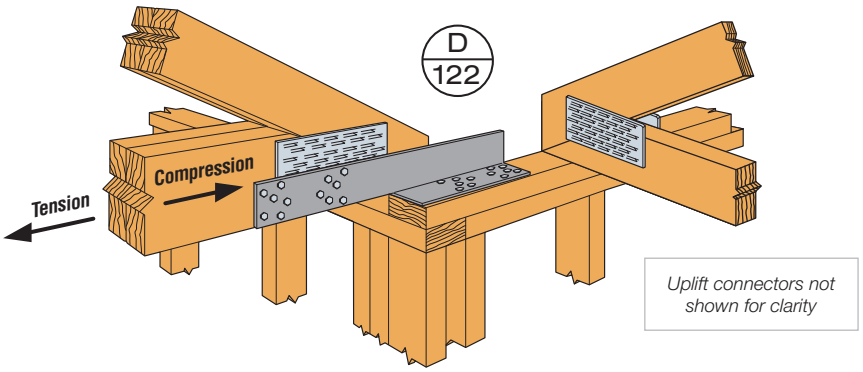

DSC5-SDS3
(DSC2-SDS3 similar)
(Right-hand DSC shown; specify right or left hand when ordering)

Hanger Uplift Considerations

- Combine loads by inverting the proper size and type of Simpson Strong-Tie® connectors in a girder, truss or beam connection, as shown below, to obtain additional uplift loads.
- In a combined installation of an inverted connector with a standard connector, all the component uplift and downloads can be added together (as shown in the example below with HGUS26-2 hangers) to obtain higher load values.
- Allowable loads shown are based on the lesser of either National Design Specification (NDS) calculations or the results of static load tests.
- Other hanger and connector options than those shown can be used as specified by the designer.

Model No.			Fasteners		DF/SP Allowable Uplift Loads
			Header	Joist	(160)
HUC26-2	HUC46	HUC26-3	(12) 0.162" x 3½"	(6) 0.148" x 3"	2,690
HUC28-2	HUC48	HUC28-3	(14) 0.162" x 3½"	(6) 0.148" x 3"	3,135
HUC210-2	HUC410	HUC210-3	(18) 0.162" x 3½"	(10) 0.148" x 3"	4,030

1. Values based on an inverted hanger installation.
2. Download assumed to be carried by jack studs.

D 123

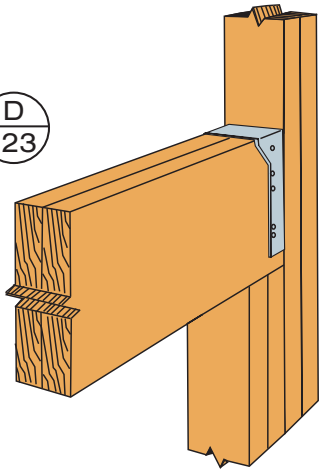

Inverted HUC210-2 for increased uplift capacity

For details about this icon, see p. 11.

Combined-Connector Example

Model No.	Fasteners		DF/SP Allowable Loads			
	Header	Joist	Uplift Loads	Downloads		
			(160)	Snow (115)	Roof (125)	Wind (160)
LRU26Z[1]	(4) 0.162" x 3½"	(5) 0.162" x 3½"	1,360	810	810	810
LS70	(5) 0.148" x 3"	(5) 0.148" x 3"	915	675	725	915
HUS26	(14) 0.162" x 3½"	(6) 0.162" x 3½"	1,320	3,095	3,235	3,235
Combined Total Load[3]			3,595	4,580	4,770	4,960

1. Values based on an inverted hanger installation.
2. Combined Total Load is based on the combined results of individual connector allowable loads. The designer shall determine if using the combined total load is appropriate.
3. Other connectors can be used for this application per the designer.

D 124

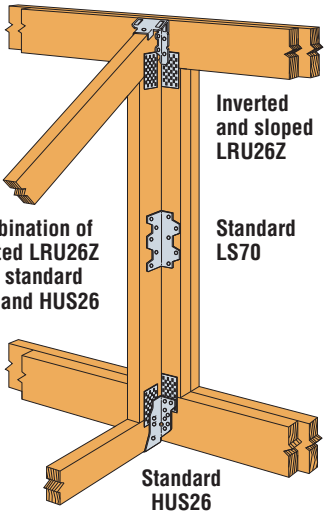

Combined-Hanger Example

Model No.	Fasteners		DF/SP Allowable Loads			
	Header	Joist	Uplift Loads	Downloads		
			(160)	Snow (115)	Roof (125)	Wind (160)
HGUS26-2	(20) 0.162" x 3½"	(8) 0.162" x 3½"	2,155	4,850	5,170	5,575
HGUS26-2[1]	(20) 0.162" x 3½"	(8) 0.162" x 3½"	5,575	2,155	2,155	2,155
Combined Total Load			7,730	7,005	7,325	7,730

1. Values based on an inverted hanger installation.
2. Other hangers can be used for this application. Contact Simpson Strong-Tie for load information.

D 125

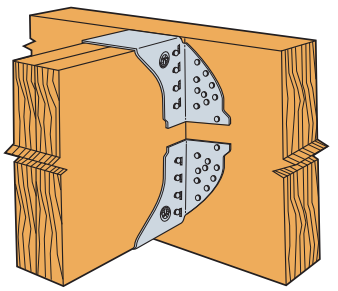

Combination of Inverted and Standard HGUS26-2

Hurricane Tie Installations to Achieve Twice the Load (Top View)

Both connectors shall be same model.

D 126

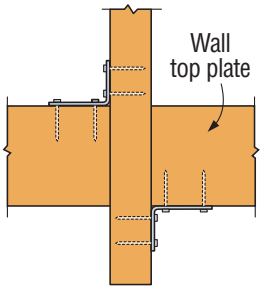

Install diagonally across from each other for minimum 2x truss.

D 127

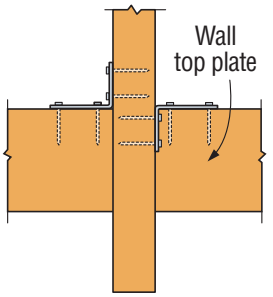

Products can be on the same side of the wall provided they are configured as shown.

D 128

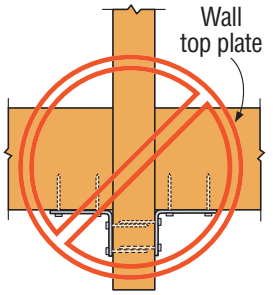

Nailing into both sides of a single ply 2x truss may cause the wood to split.

Installations using multiple connectors are limited to specific table references.

Overlapping Connectors

PROBLEM:
Connectors overlap when trusses and studs line up every 48".

D 129

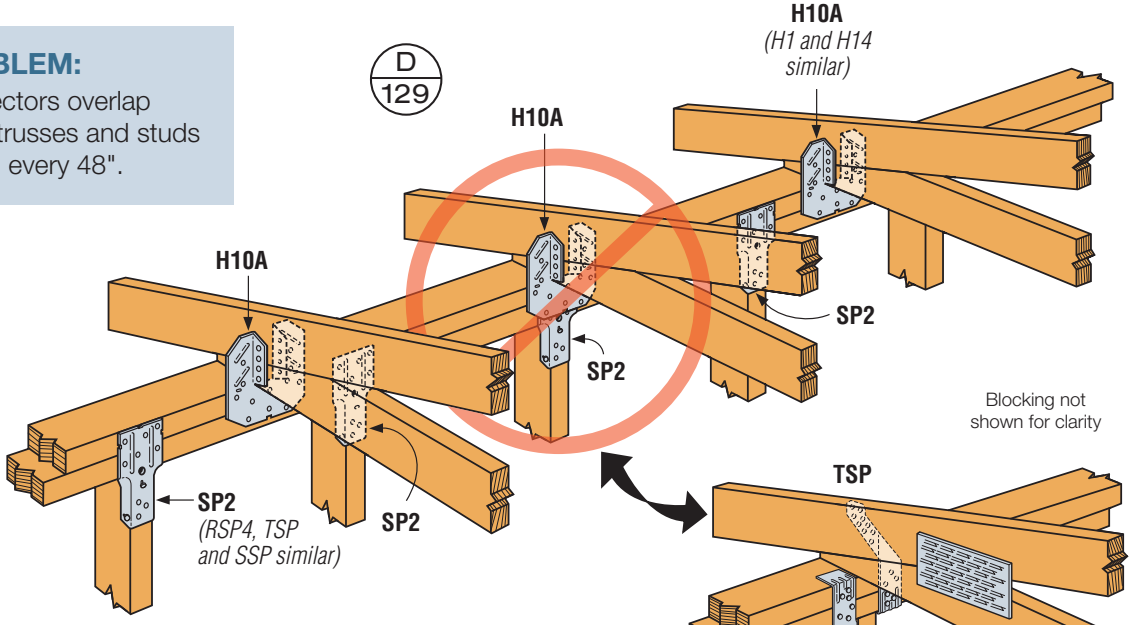

D 132

D 130

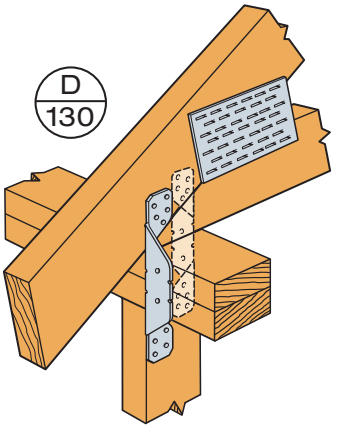

Two H2A

D 131

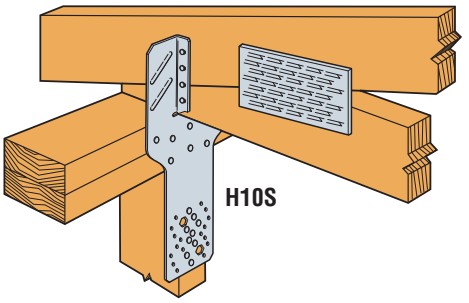

SOLUTION:
Specify connector that connects truss to stud below.

SOLUTION:
Specify TSP from stud to plate and from plate to truss.

(Strong-Drive® SDWC Truss screws may also be used. See pp. 56–59 or contact Simpson Strong-Tie for more information.)

Building Floor-to-Floor Straps

PROBLEM:
All stud nails are filled before the roof is installed and the straps bow out when compression occurs.

SOLUTION 1:
Fill the nail holes in the rim board area to limit the bowing.

SOLUTION 2:
Fill the nail holes to the top stud before the roof is installed and then fill bottom stud nails after. **Note:** Rim board nails are not required.

SOLUTION 3:
Use DTT2Z tension ties.

D
133

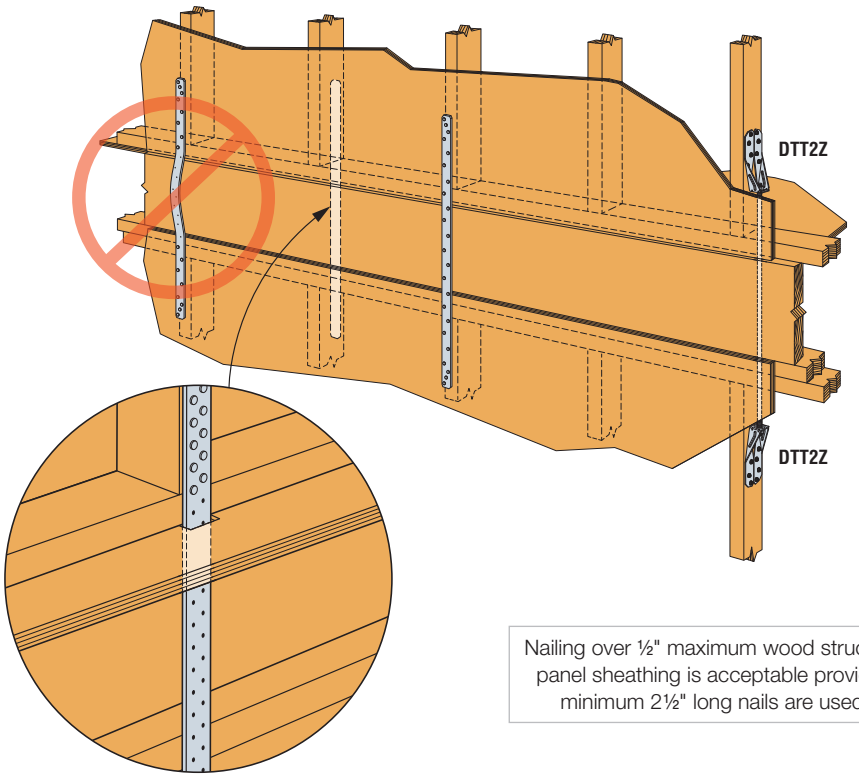

Installing straps on inside of studs will prevent interference with exterior finishes.

Nailing over ½" maximum wood structural panel sheathing is acceptable provided minimum 2½" long nails are used.

SOLUTION 4:
Use Strong-Drive® SDWC TRUSS screws (SDWC15600) for stud-to-plate connections with Strong-Drive SDWF FLOOR-TO-FLOOR screw with TUW take-up washer for bottom-plate-to-top-plate connections. This allows for up to ¾" of shrinkage per floor. See pp. 60–61.

D
134

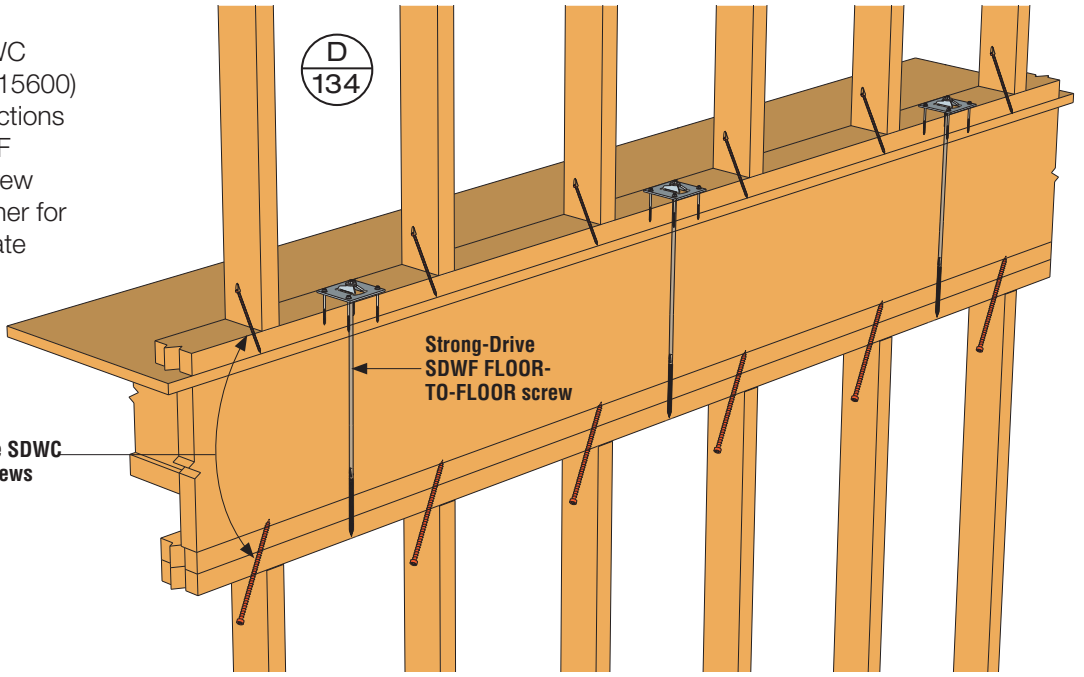

Mislocated Truss Anchors

PROBLEM:
Embedded truss anchors are mislocated more than ⅛" and less than 1½" from the face of the truss.

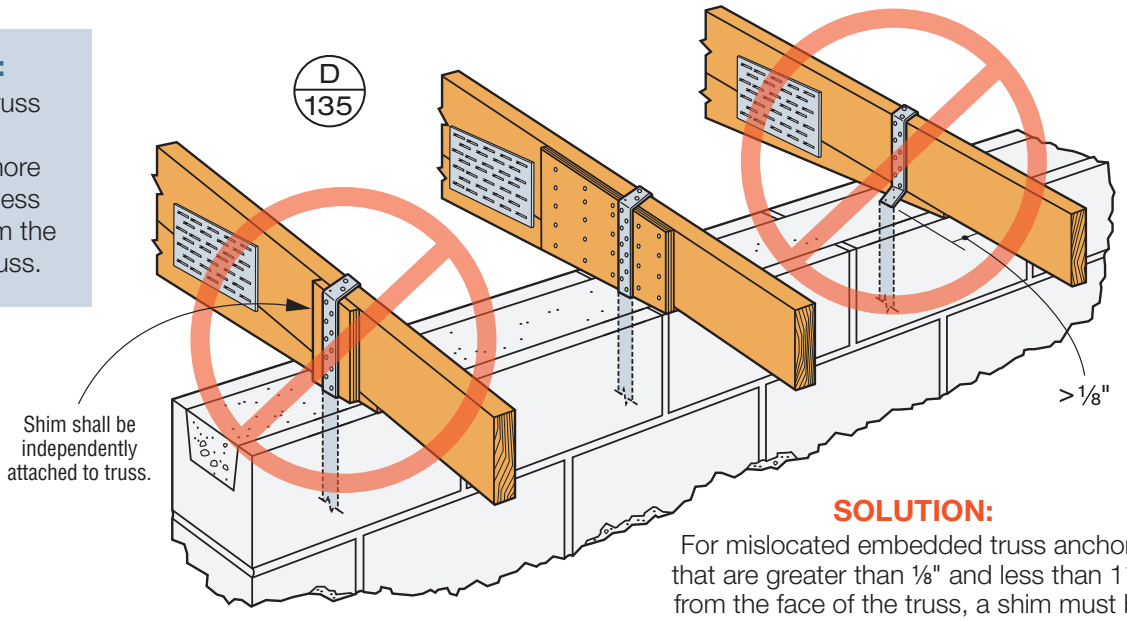

Blocking and moisture barrier not shown for clarity

SOLUTION:
For mislocated embedded truss anchors that are greater than ⅛" and less than 1½" from the face of the truss, a shim must be placed between the strap and the truss. The shim should be designed by the truss engineer to properly transfer the loads to the connector. When anchors are more than 1½" from the face of the truss, add new connectors as shown on p. 20.

Cross-Grain Tension

PROBLEM:
Wood has very low tension capacity perpendicular to grain.

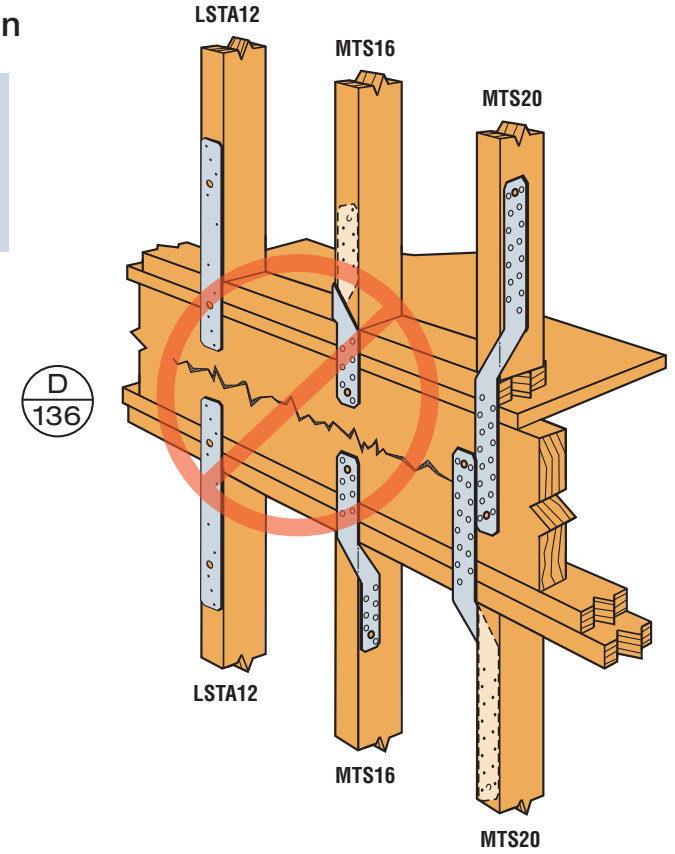

SOLUTION:
Avoid cross-grain tension by strapping stud to stud (see D/133, p. 50) or by mechanically reinforcing the lumber by overlapping MTS straps on rim board beyond centerline of rim board (as drawn).

Fastener Types

Many Simpson Strong-Tie® connectors have been designed and tested for use with specific types and sizes of fasteners. The specified quantity, type and size of fastener must be installed in the correct holes on the connector to achieve published loads. Other factors such as fastener material and finish are also important. Incorrect fastener selection or installation can compromise connector performance and could lead to failure.
For more information about fasteners, see our *Fastening Systems* catalog at **strongtie.com** or access our Fastener Finder and Fastener Designer software at **strongtie.com/software**. Many Simpson Strong-Tie screws and anchors are patented. For a complete listing, see **strongtie.com/patent**.

SS

The allowable loads of stainless-steel connectors match those of carbon-steel connectors when installed with Simpson Strong-Tie stainless-steel, SCNR ring-shank nails. For more information, refer to engineering letter L-F-SSNAILS at **strongtie.com.**

Load Adjustment Factors for Optional Nails Used with Straight Straps

Catalog Nail	Replacement	Adjustment Factor
0.162" x 3½"	0.148" x 1½"	0.84[2]
	0.148" x 3"	0.84
	0.148" x 3¼"	0.84
	0.162" x 2½"	1.00
0.148" x 3" 0.148" x 3¼"	0.148" x 1½"	1.00[3]
	0.148" x 3¼"	1.00
	0.131" x 2½"	0.83
0.131" x 2½"	0.131" x 1½"	1.00

1. For straps installed over sheathing, use a 2½" long nail minimum.
2. Where noted, use 0.80 for 10 ga., 11 ga. and 12 ga. products when using SPF lumber.
3. Where noted, use 0.92 for 10 ga., 11 ga. and 12 ga. products when using SPF lumber.

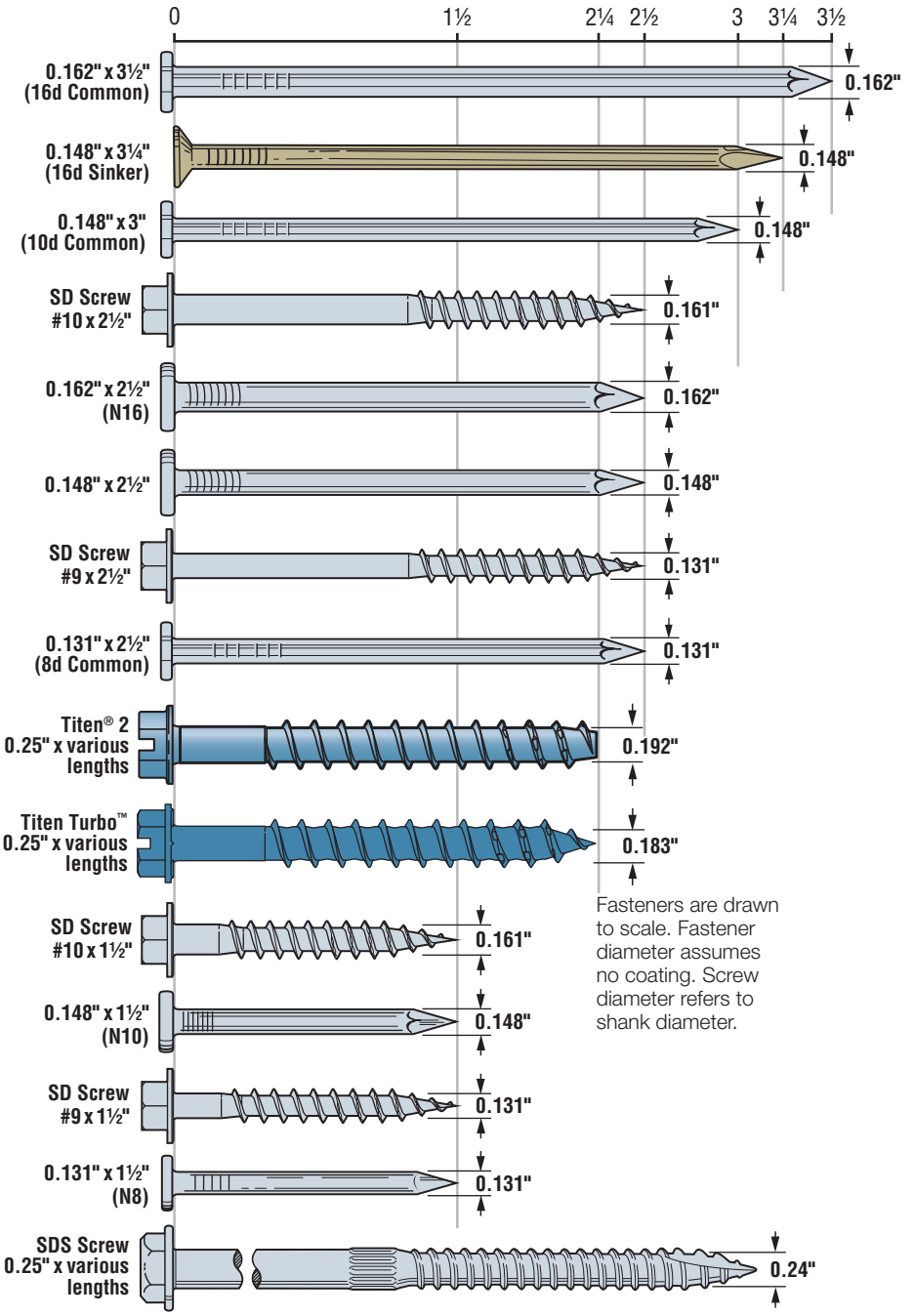

Fasteners are drawn to scale. Fastener diameter assumes no coating. Screw diameter refers to shank diameter.

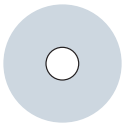

Round Holes
Purpose: To fasten a connector.
Fill Requirements: Always fill, unless noted otherwise.

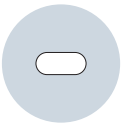

Obround Holes
Purpose: To make fastening a connector in a tight location easier.
Fill Requirements: Always fill.

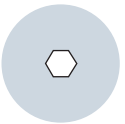

Hexagonal Holes
Purpose: To fasten a connector to concrete or masonry.
Fill Requirements: Always fill when fastening a connector to concrete or masonry.

Triangular Holes
Purpose: To increase a connector's strength or to achieve max. strength.
Fill Requirements: When the designer specifies max. nailing.

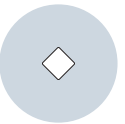

Diamond Holes
Purpose: To temporarily fasten a connector to make installing it easier.
Fill Requirements: None.

Strong-Drive® SDS HEAVY-DUTY CONNECTOR Screw

The Simpson Strong-Tie® Strong-Drive SDS Heavy-Duty Connector screw is a ¼"-diameter structural wood screw ideal for various connector installations as well as wood-to-wood applications. It installs with no predrilling and has been extensively tested in various applications. The SDS Heavy-Duty Connector screw is improved with an easy-driving Type-17 point and a corrosion resistant double-barrier coating.

Features:

- The Type-17 point reduces installation torque and makes driving easier with no predrilling and minimal wood splitting.
- Available with a double-barrier coating or in Type 316 stainless steel. Carbon steel loads apply to corresponding stainless-steel models.
- ⅜" hex washer head is stamped with the No-Equal sign and fastener length for easy identification after installation.
- For the ⅜" hex-head driver bit, order model no. BITHEXR38-14.

Material: Heat-treated carbon steel, or Type 316 stainless steel

Finish: Double barrier (all lengths); Type 316 stainless steel (1½" through 3½" lengths)

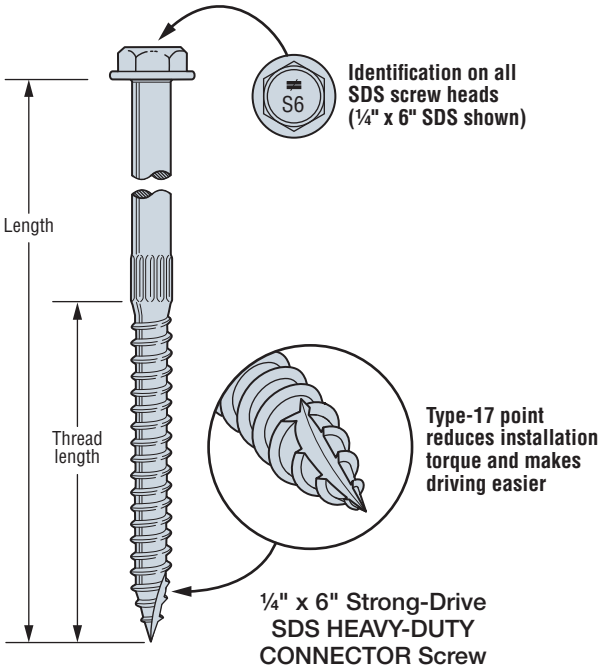

SS For details about these icons, see p. 11.

Strong-Drive SDS **HEAVY-DUTY CONNECTOR** Screw

	Size (in.)	Model No.[7]	Thread Length (in.)	Fasteners per Carton[5]	DF/SP Allowable Loads[3]						SPF/HF Allowable Loads[3]					
					Shear (100)					Withdrawal[4] (100)	Shear (100)					Withdrawal[4] (100)
					Wood Side Plate[2]		Steel Side Plate				Wood Side Plate[2]		Steel Side Plate			
					1½"	1¾" SCL	16 ga.	14 ga. and 12 ga.	10 ga. or Greater	Wood or Steel Side Plate	1½"	1¾" SPF LVL	16 ga.	14 ga. and 12 ga.	10 ga. or Greater	Wood or Steel Side Plate
SS	¼ x 1½	SDS25112	1	1,500	—	—	250	250	250	170	—	—	180	180	180	120
SS	¼ x 2	SDS25200	1¼	1,300	—	—	250	290	290	215	—	—	180	210	210	150
SS	¼ x 2½	SDS25212	1½	1,100	190	—	250	390	420	255	135	—	180	280	300	180
SS	¼ x 3	SDS25300	2	950	280	—	250	420	420	345	200	—	180	300	300	240
SS	¼ x 3½	SDS25312	2¼	900	340	340	250	420	420	385	245	245	180	300	300	270
	¼ x 4½	SDS25412	2¾	800	350	340	250	420	420	475	250	245	180	300	300	330
	¼ x 5	SDS25500	2¾	500	350	340	250	420	420	475	250	245	180	300	300	330
	¼ x 6	SDS25600	3¼	600	350	340	250	420	420	560	250	245	180	300	300	395
	¼ x 8	SDS25800	3¼	400	350	340	250	420	420	560	250	245	180	300	300	395

1. Strong-Drive SDS Heavy-Duty Connector screws install best with a low-speed ½" drill with a ⅜" hex-head driver.
2. All applications are based on full penetration into the main member.
3. Allowable loads are shown at the wood load duration factor of C_D = 1.00. Loads may be increased for load duration per the building code up to a C_D = 1.60.
4. Withdrawal loads shown are in pounds (lbs.) and are based on the entire threaded section installed into the main member. If thread penetration into the main member is less than the thread length as shown in the table, reduce allowable load by 172 lb. x inches of thread not in main member. Use 121 lb./inch for SPF.
5. Fasteners per carton represents the number of screws which are available in bulk packaging. Screws are also available in mini-bulk and retail packs. Refer to Simpson Strong-Tie List Price book or contact Simpson Strong-Tie for more information.
6. LSL wood-to-wood applications that require 4½", 5", 6" or 8" Strong-Drive SDS Heavy-Duty Connector screws are limited to interior-dry use only.
7. Add "SS" to model no. for Type 316 stainless steel.
8. For in-service moisture greater than 19% use, C_M = 0.7.

Strong-Drive® SD CONNECTOR Screw

Simpson Strong-Tie® offers the Strong-Drive SD Connector screw for use with our connectors. Designed to replace nails in certain products, the load-rated SD Connector screw has been tested and approved for use in many popular Simpson Strong-Tie connectors. In certain applications, screws are easier and more convenient to install than nails, and the single-fastener load values achieved by the SD9 and SD10 exceed those of typical 10d common or 16d common nails, respectively. In addition, the galvanized coating makes the SD Connector screw ideal for interior and most exterior conditions.

The Strong-Drive SD Connector screw features an optimized shank, specifically designed for compatibility with the fastener holes in Simpson Strong-Tie connectors. The hex head ensures a positive drive and helps avoid stripping of the head during installation. The sharp point of the screw enables fast starts, and the patented serrated threads reduce torque for improved drivability.

For a current list of approved connectors, load values and applications, visit **strongtie.com/sd**.

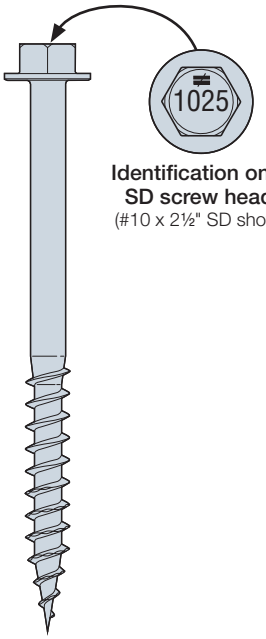

Identification on all SD screw heads
(#10 x 2½" SD shown)

Strong-Drive SD CONNECTOR Screw (SD10)
(SD9 similar)

The Simpson Strong-Tie Strong-Drive SD Connector screw is the only screw approved for use with our connectors in place of specified nails.

For details about this icon, see p. 11.

Size (in.)	Coating Material	Retail Pack		Contractor Pack		Mini Bulk	
		Fasteners per Pack	Model No.	Fasteners per Pack	Model No.	Fasteners per Pack	Model No.
#9 x 1½	Mechanically Galvanized	100	SD9112R100	500	SD9112R500	3000	SD9112MB
#9 x 2½	Mechanically Galvanized	100	SD9212R100-R	500	SD9212R500	2000	SD9212MB
#10 x 1½	Mechanically Galvanized	100	SD10112R100	500	SD10112R500	3000	SD10112MB
#10 x 2½	Mechanically Galvanized	100	SD10212R100-R	500	SD10212R500	2000	SD10212MB

Strong-Drive SD **CONNECTOR** Screw

Size (in.)	Model No.	Thread Length (in.)	DF/SP Allowable Loads (100)		SPF/HF Allowable Loads (100)	
			Shear Steel Side Plate 20 ga.–12 ga.	Withdrawal	Shear Steel Side Plate 20 ga.–12 ga.	Withdrawal
#9 x 1½	SD9112	1	171	173	112	122
#9 x 2½	SD9212	1	200		112	
#10 x 1½	SD10112	1	173	173	138	122
#10 x 2½	SD10212	1	215		165	

1. Withdrawal loads and steel-side-plate shear loads are based on testing per AC233.
2. Allowable loads are shown at the wood load duration factor of C_D = 1.00. Loads may be increased for load duration per the building code up to a C_D = 1.60.
3. Withdrawal loads shown are in pounds (lbs.) and are based on the entire threaded section installed into the main member.
4. Visit **strongtie.com** for wood-to-wood shear values and wood-side-plate details.
5. Steel plate thickness is 33 to 100 mils (20–12 ga.).

Strong-Drive® SDWS **TIMBER** Screw (Exterior Grade) Allowable Shear Values for Sole Plate-to-Rim Connections

Size Dia.x L (in.)	Model No.	Sole Plate Nominal Size	Minimum Penetration into Rim Board (in.)	Allowable Loads Shear (100)							
				2x DF/SP Rim Board		2x SPF/HF Rim Board		1¼" Min. LVL Rim Board		1¼" Min. LSL Rim Board	
				DF/SP Sole Plate	SPF/HF Sole Plate	DF/SP Sole Plate	SPF/HF Sole Plate	DF/SP Sole Plate	SPF/HF Sole Plate	DF/SP Sole Plate	SPF/HF Sole Plate
0.220 x 4	SDWS22400DB	2x	1.75	345	295	295	295	275	275	275	275
0.220 x 5	SDWS22500DB	2x	2	345	295	295	295	275	275	275	275
0.220 x 6	SDWS22600DB	2x or 3x	2	345	295	295	295	275	275	275	275

1. Allowable loads are based on testing per ICC-ES AC233 and are limited to parallel-to-grain loading.
2. Allowable loads are shown at the wood load duration factor of C_D = 1.00. Loads may be increased for load duration per the building code up to a C_D = 1.60.
3. Minimum spacing of the SDWS is 6" o.c., minimum end distance is 6", and minimum edge distance is ⅝".
4. Wood structural panel up to 1⅛" thick is permitted between the sole plate and rim board provided it is fastened to the rim board per code and the minimum penetration of the screw into the rim board is met.
5. A double 2x sole plate is permitted provided it is independently fastened per the code and the minimum screw penetration per the table is met.

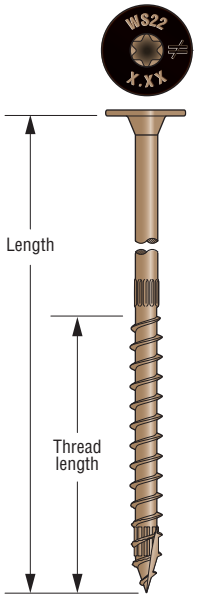

Strong-Drive SDWS TIMBER Screw (Exterior Grade)

Strong-Drive SDWS **TIMBER** Screw (Exterior Grade) Allowable Shear Loads – Douglas Fir–Larch and Southern Pine

Size Dia.x L (in.)	Model No.	Thread Length TL (in.)	DF/SP Allowable Loads Shear (100) Wood Side Member Thickness (in.)								
			1.5	2	2.5	3	3.5	4	4.5	6	8
0.220 x 3	SDWS22300DB	1½	255	—	—	—	—	—	—	—	—
0.220 x 4	SDWS22400DB	2⅜	405	405	305	—	—	—	—	—	—
0.220 x 5	SDWS22500DB	2¾	405	405	360	360	325	—	—	—	—
0.220 x 6	SDWS22600DB	2¾	405	405	405	405	365	365	355	—	—
0.220 x 8	SDWS22800DB	2¾	405	405	405	405	395	395	395	395	—
0.220 x 10	SDWS221000DB	2¾	405	405	405	405	395	395	395	395	395

See footnotes below.

For sole-to-rim connections using SDWV, SDS or SDWC screws, see *Fastening Systems* catalog.

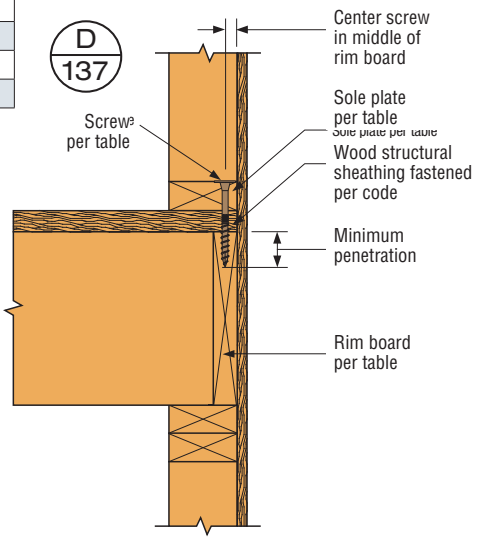

Strong-Drive SDWS **TIMBER** Screw (Exterior Grade) Allowable Shear Loads – Spruce-Pine-Fir and Hem-Fir

Size Dia.x L (in.)	Model No.	Thread Length TL (in.)	SPF/HF Allowable Loads Shear (100) Wood Side Member Thickness (in.)								
			1.5	2	2.5	3	3.5	4	4.5	6	8
0.220 x 3	SDWS22300DB	1½	190	—	—	—	—	—	—	—	—
0.220 x 4	SDWS22400DB	2⅜	385	285	215	—	—	—	—	—	—
0.220 x 5	SDWS22500DB	2¾	405	290	290	290	195	—	—	—	—
0.220 x 6	SDWS22600DB	2¾	405	365	365	365	310	310	210	—	—
0.220 x 8	SDWS22800DB	2¾	405	365	365	365	310	310	280	280	—
0.220 x 10	SDWS221000DB	2¾	405	365	365	365	310	310	280	280	280

1. All applications are based on full penetration into the main member. Full penetration is the screw length minus the side member thickness.
2. Allowable loads are shown at the wood load duration factor of C_D = 1.0. Loads may be increased for load duration per the building code up to a C_D = 1.6. Tabulated values must be multiplied by all applicable adjustment factors per the NDS.
3. Minimum fastener spacing requirements to achieve table loads: 6" end distance, 1⁷⁄₁₆" edge distance, ⅝" between staggered rows of fasteners, 4" between non-staggered rows of fasteners and 8" between fasteners in a row.
4. For in-service moisture content greater than 19%, use C_M = 0.7.

D
138

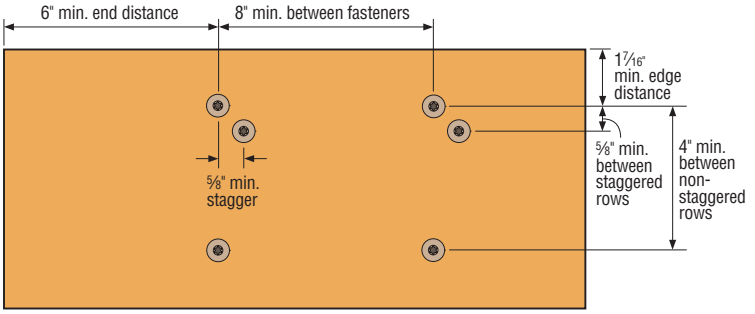

Strong-Drive SDWS TIMBER Screw Spacing Requirements

Strong-Drive® SDWC **TRUSS** Screw for Truss/Rafter-to-Top Plate Connection Allowable Loads and Installation Requirements

Model No.	Qty. Required	Minor Diameter (in.)	Length (in.)	Thread Length (in.)	Installation	Allowable Loads (lb.)								
						DFL			SP			SPF/HF		
						Uplift	F_1	F_2	Uplift	F_1	F_2	Uplift	F_1	F_2
SDWC15600	1	0.152	6	5¾	1	835	405	225	900	505	225	595	305	190
					2	715	270	225	805	380	225	505	265	190
					3									
					4									
					Gable End	860	620	375	980	625	445	635	425	300

1. Loads have been increased for wind and earthquake (C_D = 1.6); no further increases allowed. Reduce when other loads govern.
2. The SDWC is to be installed through a double 2x top plate into a minimum 2x4 truss or rafter.
3. The SDWC screws shall be driven such that the shank is fully embedded in the connection members, the head is in contact with or embedded in the side member, and the point does not protrude from the lateral surface of the main member. When embedded, the top surface of the head shall be no more than ⅛" beyond flush.
4. An SDWC screw may be used in each ply of two- or three-ply rafters or trusses. The allowable uplift load for each screw shall be multiplied by 0.90, but may be limited by the capacity of the plate or the connection between the top plate to the framing below. SDWC screws in multi-ply assemblies must be spaced a minimum of 1½" o.c.
5. Screws are shown installed on the interior side of the wall. Installations on the exterior side of the wall are acceptable when the rafter/truss overhangs the top plates a minimum of 3½".
6. For Uplift Connection Load Path, the designer shall verify complete continuity of the uplift load path.
7. F_1 and F_2 are the directions parallel and perpendicular to the wall, respectively.
8. When a screw is loaded simultaneously in more than one direction, the allowable load must be evaluated using the unity equation: (Design Uplift ÷ Allowable Uplift) + (Design F_1 ÷ Allowable F_1) + (Design F_2 ÷ Allowable F_2) ≤ 1.0. The three terms in the unity equation represent the possible generated force directions. The number of terms that must be considered for simultaneous loading is the sole discretion of the designer and depends on the method of calculating wind forces and the utilization of the screws within the structural system.
9. Table loads do not apply to trusses with end-grain bearing.
10. Top plate-to-stud and top plate splice fastened per applicable Building Code.

Typical Roof-to-Wall Connection

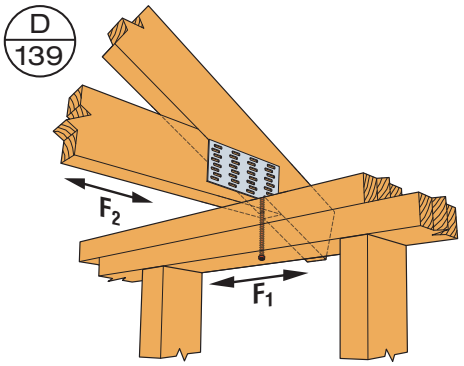

Installation 1: Truss/Rafter Offset from Stud
(underside of top plate)

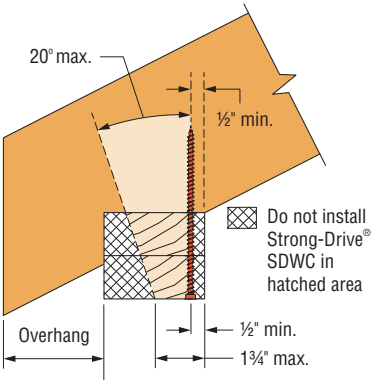

Installation Angle Limit

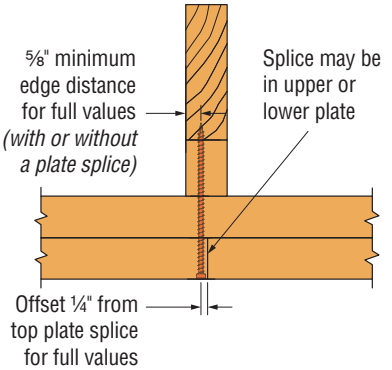

Minimum Edge Distance and Top-Plate Splice Offset

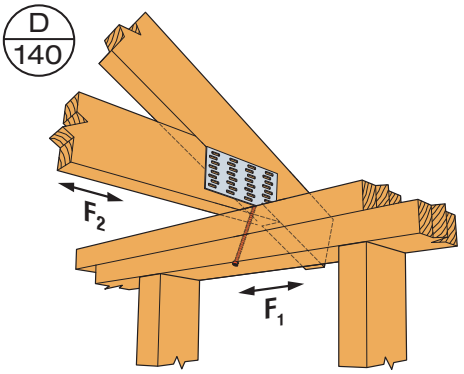

Installation 2: Truss/Rafter Offset from Stud, Lower Top-Plate Corner

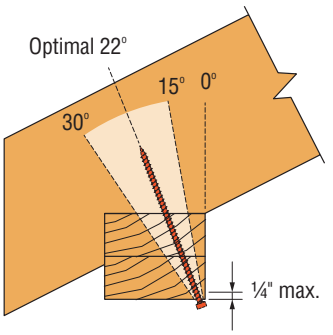

Installation Angle Limit

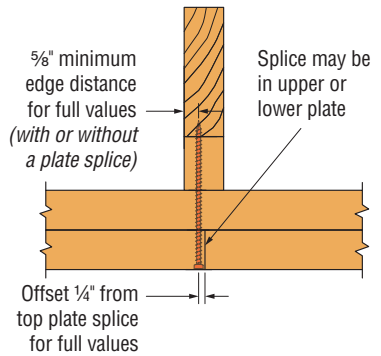

Minimum Edge Distance and Top-Plate Splice Offset

Roof to Wall (cont.)

D 141

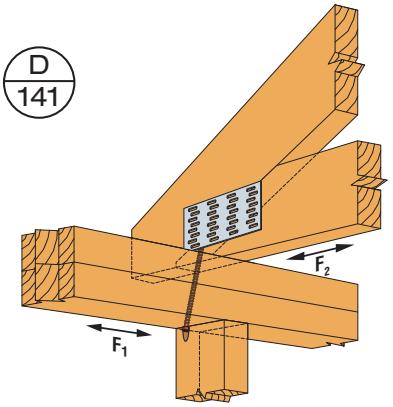

Installation 3: Rafter/Truss Aligned with Stud, Wide Face of Stud

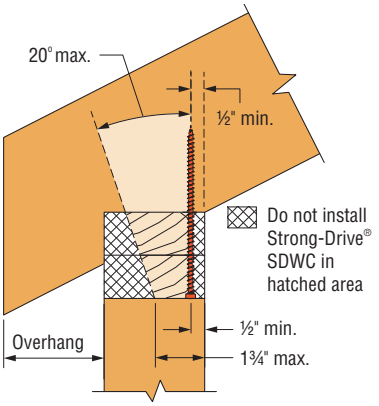

Installation Angle Limit and Minimum Edge Distance

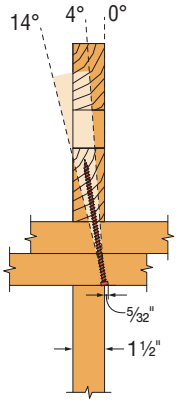

Installation Angle Limit

D 142

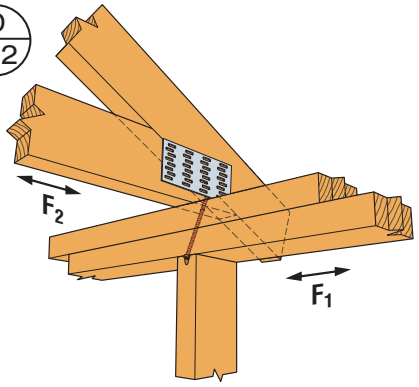

Installation 4: Truss/Rafter Aligned with Stud, Narrow Face of Stud *(or Over Header)*

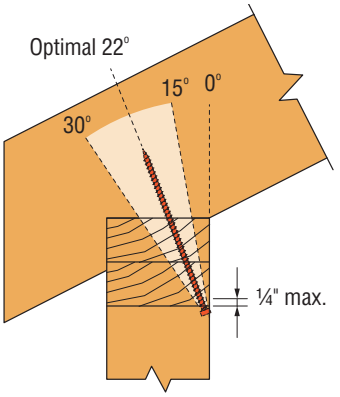

Installation Angle Limit

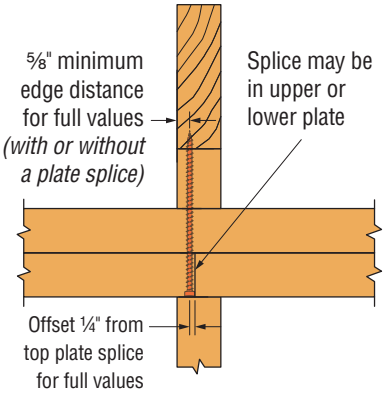

Minimum Edge Distance and Top-Plate Splice Offset

D 143

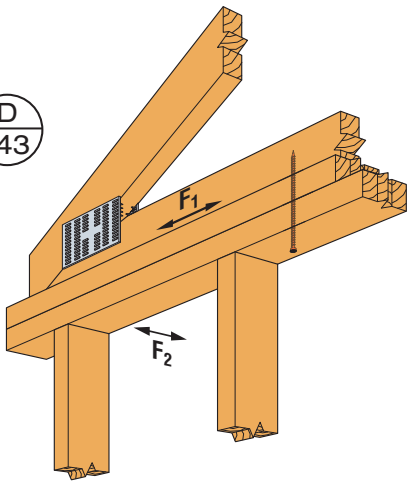

New Gable End Installation: Top Plate-to-Gable End Installation

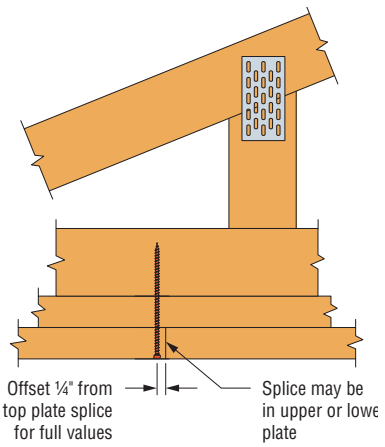

Minimum Top-Plate Splice Offset

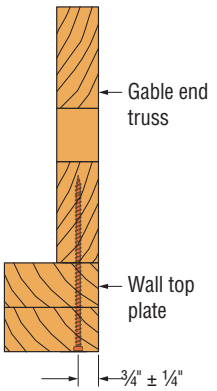

Minimum Edge Distance

Strong-Drive® SDWC **TRUSS** Screw for Truss/Rafter-to-Top Plate Connection Allowable Loads and Installation Requirements

Model No.	Quantity Required	Minor Diameter (in.)	Length (in.)	Thread Length (in.)	Configuration	Allowable Loads (160)					
						DF/SP			SPF/HF		
						Uplift	F_1	F_2	Uplift	F_1	F_2
SDWC15600	2	0.152	6	5¾	A	1,200	685	995	1,045	495	670
					B	1,195	680	925	1,195	405	680
					C	905	535	790	850	330	595
					D	1,115	645	920	960	385	610

1. Loads have been increased for wind and earthquake loading (C_D = 1.6) with no further increase allowed; reduce where other loads govern.
2. For uplift connection load path, the designer shall verify complete continuity of the uplift load path.
3. When cross-grain tension cannot be avoided, supplemental reinforcement shall be considered by the designer.
4. The SDWC screws shall not interfere with other fasteners or truss plates. Where truss plates must be penetrated for Configuration D, a truss designer approval is required in accordance with ANSI/TPI 1-2007/2014, Section 7.5.3.4 and 8.9.2. To predrill through truss plate, use a ⅛" drill bit.
5. The metal installation guide provided with the screw is angled at 22° and can be used for Configurations C and D; proper installation angles for all configurations are the responsibility of the installer.
6. SDWC screws must be offset min. ¼" from top plate splices for full values.
7. Loads assume minimum overhang of 3½".
8. When a screw is loaded simultaneously in more than one direction, the allowable load must be evaluated using the unity equation: (Design Uplift ÷ Allowable Uplift) + (Design F_1 ÷ Allowable F_1) + (Design F_2 ÷ Allowable F_2) ≤ 1.0. The three terms in the unity equation represent the possible generated force directions. The number of terms that must be considered for simultaneous loading is the sole discretion of the designer and depends on the method of calculating wind forces and the utilization of the screws within the structural system.
9. An SDWC screw may be used in each ply of two- or three-ply rafters or trusses. The allowable uplift load for each screw shall be multiplied by 0.90, but may be limited by the capacity of the plate or the connection between the top plate to the framing below. SDWC screws in multi-ply assemblies must be spaced a minimum of 1½" o.c.

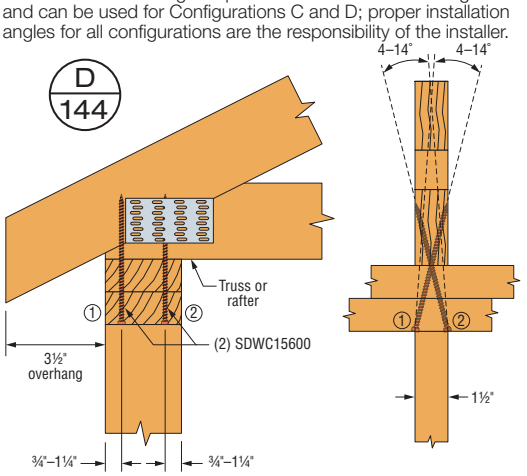

CONFIGURATION A
(truss aligned with stud)
Install Through Top Plate into Truss/Rafter
Both screws installed at a 4°–14° angle, offset ¾" to 1¼" from opposite edges of the top plate.

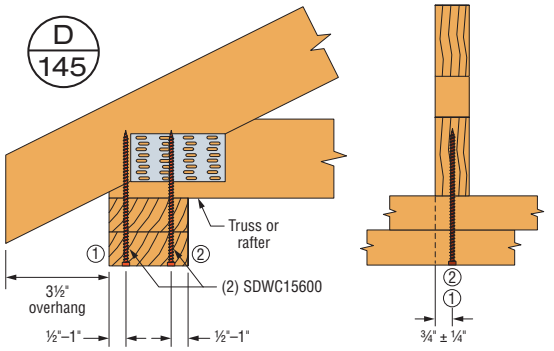

CONFIGURATION B
(truss offset from stud)
Install Through Top Plate into Truss/Rafter
Both screws installed vertically ±5° into the center of the truss/rafter from the underside of the top plate, ½" to 1" from opposite edges of the top plate.

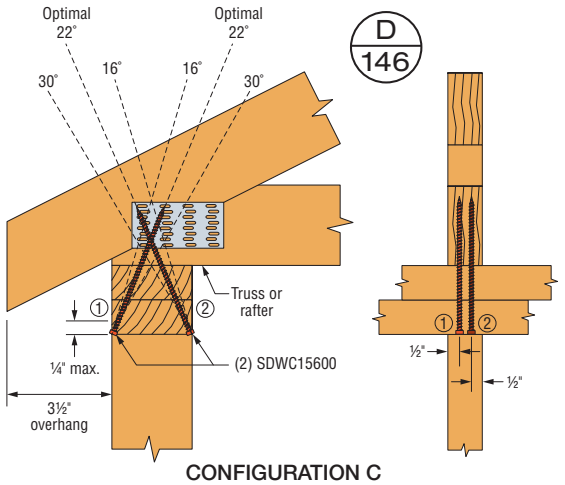

CONFIGURATION C
Install Through Top Plate into Truss/Rafter
Both screws installed at a 16°–30° angle, offset ½" from the opposite edges of truss/rafter. Use metal installation guide included in screw kits for optimal 22° installation.

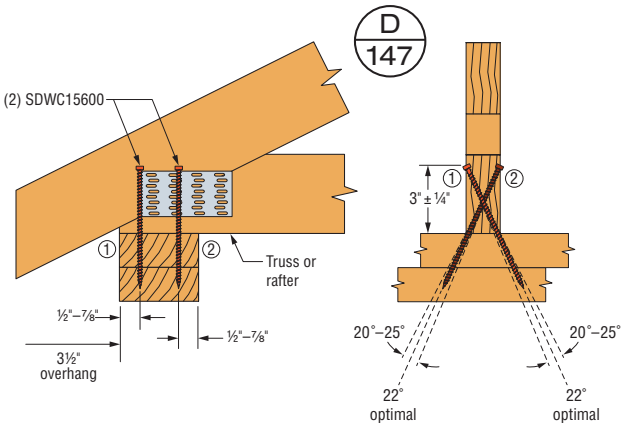

CONFIGURATION D
Install Through Truss/Rafter into Top Plate
Both screws installed at a 20°-25° angle with a ½" to ⅞" offset from the opposite edges of top plate and 3" ± ¼" above top plate. Use metal installation guide included in screw kits for optimal 22° installation. To predrill through truss plates, use a ⅛" drill bit.

Stud to Plate (Wide Face)

Strong-Drive® SDWC **TRUSS** Screw — Allowable Wide Face of Stud-to-Plate Connection Loads

Type of Connection	Model No.	No. of Screws Installed	Minor Diameter (in.)	Length (in.)	Thread Length (in.)	Nominal Plate Thickness (in.)	Allowable Loads (160)			
							DF/SP		SPF/HF	
							Uplift	F_2	Uplift	F_2
1	SDWC15600[5]	1	0.152	6	5¾	(2) 2x	590	177	510	152
		2					1,135	320	980	275
		3					1,700	485	1,470	415
2	SDWC15600[4]	1	0.152	6	5¾	2x	450	189	310	153
		2					865	345	595	280
		3					1,295	515	895	420
3	SDWC15450[3]	1	0.152	4½	4¼	2x	360	215	310	153
		2					690	390	595	280
		3					1,035	585	895	420

1. Loads have been increased for wind and earthquake loading (C_D = 1.6) with no further increases allowed; reduce where other loads govern.
2. Allowable loads are for SDWC installed per the installation instructions.
3. Where noted, the SDWC15450 is to be installed through the face of a 2x stud into a single 2x bottom plate over a concrete/masonry foundation.
4. Where noted, the SDWC15600 is to be installed through the face of a 2x stud into a single 2x bottom plate over a wood floor system.
5. Where noted, the SDWC15600 is to be installed through the face of a 2x stud into a double 2x top or bottom plate.
6. Double top plates shall be fastened together as required by applicable code.
7. When a screw is loaded simultaneously in more than one direction, the allowable load must be evaluated using the unity equation: (Design Uplift ÷ Allowable Uplift) + (Design F_1 ÷ Allowable F_1) + (Design F_2 ÷ Allowable F_2) ≤ 1.0. The three terms in the unity equation represent the possible generated force directions. The number of terms that must be considered for simultaneous loading is the sole discretion of the designer and depends on the method of calculating wind forces and the utilization of the screws within the structural system.

Wide Face of Stud-to-Plate Connections

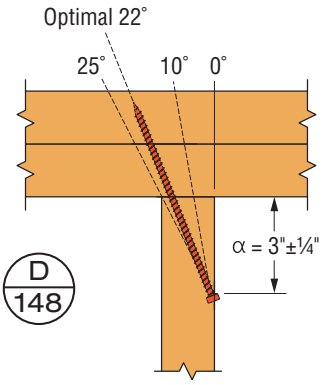

1 Stud-to-Top Plate Connection

(this application requires SDWC15600)

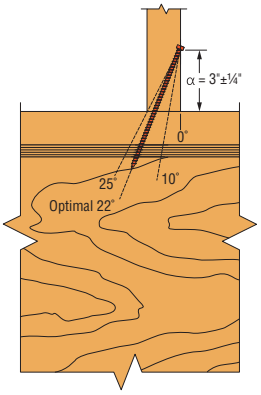

2 Stud-to-Bottom Plate Connection Over Wood Floor

(this application requires SDWC15600)

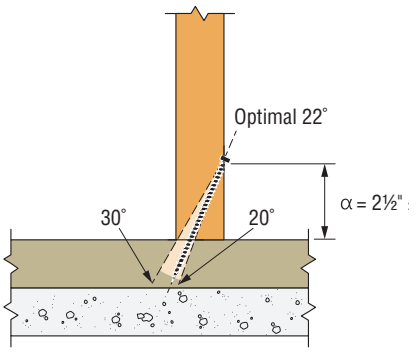

3 Stud-to-Bottom Plate Connection Over Concrete/ Masonry Foundation

(this application requires SDWC15450)

Connection	α
1	3" ± ¼"
2	3" ± ¼"
3	2½" ± ¼"

Dimension α is as shown in 1, 2 or 3 depending on the SDWC screw being used and the floor substrate. This ∝ measurement is applicable for one, two and three screw connections (see below).

Spacing Requirements for Top or Bottom of Stud Along Wide Face

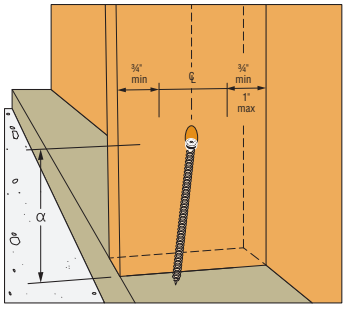

One Screw

One fastener driven in wide face of 2x4, 2x6 or 2x8; maintain minimum edge distance of ¾".

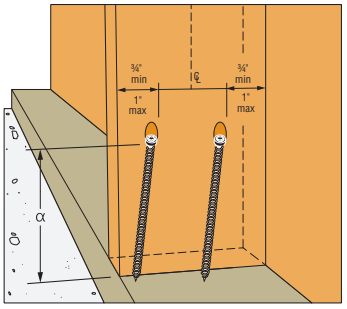

Two Screws

Two fasteners driven into same wide face of 2x4, 2x6 or 2x8. Maintain minimum edge distance of ¾" and maximum edge distance of 1" for proper spacing between fasteners.

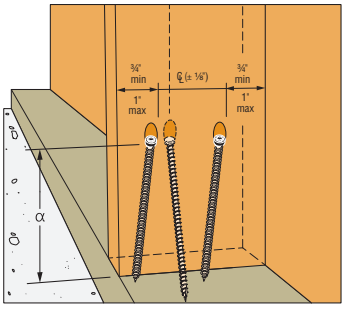

Three Screws

Two fasteners driven into same wide face of 2x4, 2x6 or 2x8. Maintain minimum edge distance of ¾" and maximum edge distance of 1" for proper spacing between fasteners. One fastener driven within ⅛" of centerline of 2x4, 2x6 or 2x8 on OPPOSITE wide face.

Strong-Drive® SDWC **TRUSS** Screw — Allowable Narrow Face of Stud-to-Plate Connection Loads

Type of Connection	Model No.	Qty. Required	Minor Diameter (in.)	Length (in.)	Thread Length (in.)	Plate Size	Allowable Loads (160)			
							DF/SP		SPF/HF	
							Uplift	F_2	Uplift	F_2
1	SDWC15600[2]	1	0.152	6	5 ¾	(2) 2x	590	170	510	145
2	SDWC15600[3]	1	0.152	6	5 ¾	2x	450	155	310	135
3	SDWC15450[4]	1	0.152	4 ½	4 ¼	2x	295	150	255	130

1. Loads have been increased for wind and earthquake (C_D = 1.6), no further increase is allowed; reduce when other loads govern.
2. Where noted, the SDWC15600 is to be installed through the narrow face of a 2x stud into a double 2x top or bottom plate.
3. Where noted, the SDWC15600 is to be installed through the narrow face of a 2x stud into a single 2x bottom plate over a wood floor system.
4. Where noted, the SDWC15450 is to be installed through the narrow face of a 2x stud into a single 2x bottom plate over a concrete/masonry foundation.
5. Double top plates shall be fastened together as required by applicable code.
6. The F_2 direction is perpendicular to the wall. When the screw is loaded simultaneously in more than one direction, the allowable load must be evaluated using the following equation: (Design Uplift ÷ Allowable Uplift) + (Design F_2 ÷ Allowable F_2) ≤ 1.0.
7. One SDWC screw per stud maximum when installed in the narrow face of the stud. Where the SDWC screws are installed on multiple adjacent studs, the minimum spacing between screws must be 1½". The allowable uplift load for each screw shall be multiplied by 0.90, but may be limited by the capacity of the plate.
8. For uplift continuous load path, connections in the same area (i.e., truss-to-plate connector and plate-to-stud connector) must be on the same side of the wall.

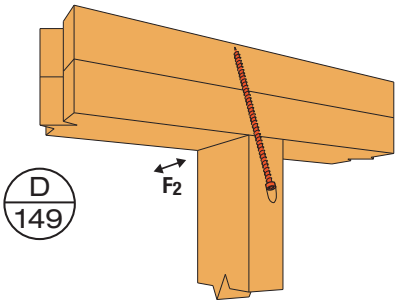

1 Narrow Face of Stud-to-Top Plate Connection
(this application requires SDWC15600)

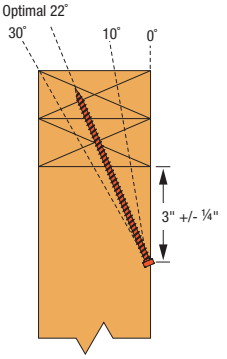

Installation Angle Range

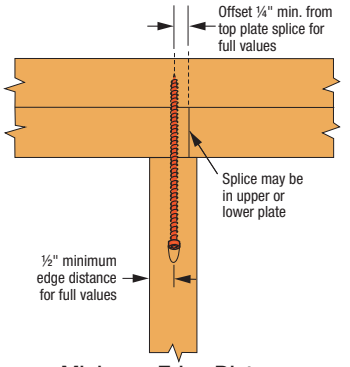

Minimum Edge Distance and Splice Offset Requirements

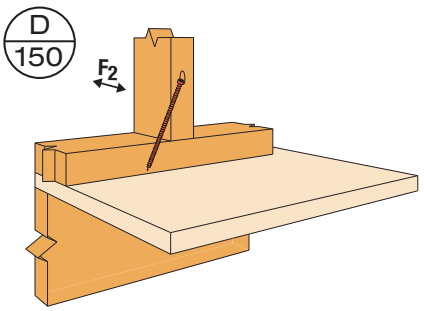

2 Narrow Face of Stud-to-Bottom Plate Connection over Wood Floor
(SDWC15600 shown)

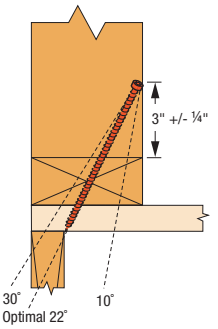

Installation Angle Range

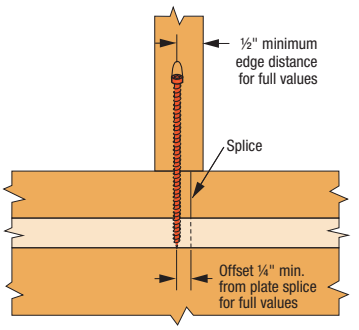

Minimum Edge Distance and Splice Offset Requirements

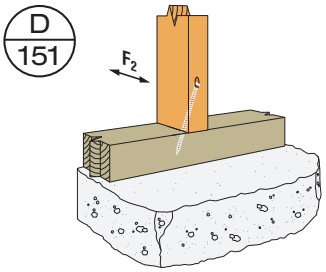

3 Narrow Face of Stud-to-Bottom Plate Connection over Masonry/Concrete Foundation
(this application requires SDWC15450)

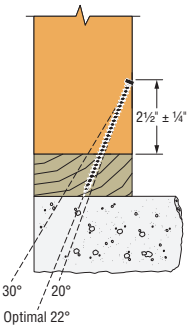

Installation Angle Range

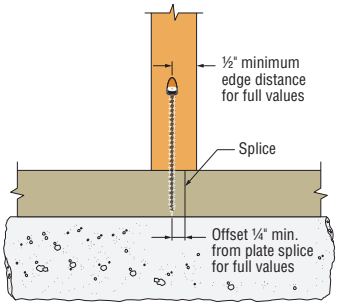

Minimum Edge Distance and Splice Offset Requirements

Strong-Drive® SDWF **FLOOR-TO-FLOOR** Screw Product Information and Withdrawal Loads

Model No.	Size (in.)	Thread Length (in.)	Allowable Joist Depth Below (in.)				Allowable Withdrawal per Thread Penetration (lb./in.) (100)		
			Single Bottom Plate		Double Bottom Plate				
			Min.	Max.	Min.	Max.	SP	DF	SPF
SDWF2716-TUW	0.27 x 16	5	8½	10½	6⅞	9	295	250	180
SDWF2720-TUW	0.27 x 20	5	12½	14½	10⅞	13			
SDWF2724-TUW	0.27 x 24	5	16½	18½	14⅞	17			
SDWF2726-TUW	0.27 x 26	5	18½	20½	16⅞	19			
SDWF2730-TUW	0.27 x 30	5	22½	24½	20⅞	23			

1. Allowable loads are shown at the wood load duration factor of C_D = 1.00. Loads may be increased for load duration by the building code up to a C_D = 1.60.
2. Joist depth listed based on the ¾" subfloor and 3" of thread penetration into double top plates.
3. For joist depths of 11¼", 11⅞" and 16", please refer to L-F-SDWFALTHT at **strongtie.com**.

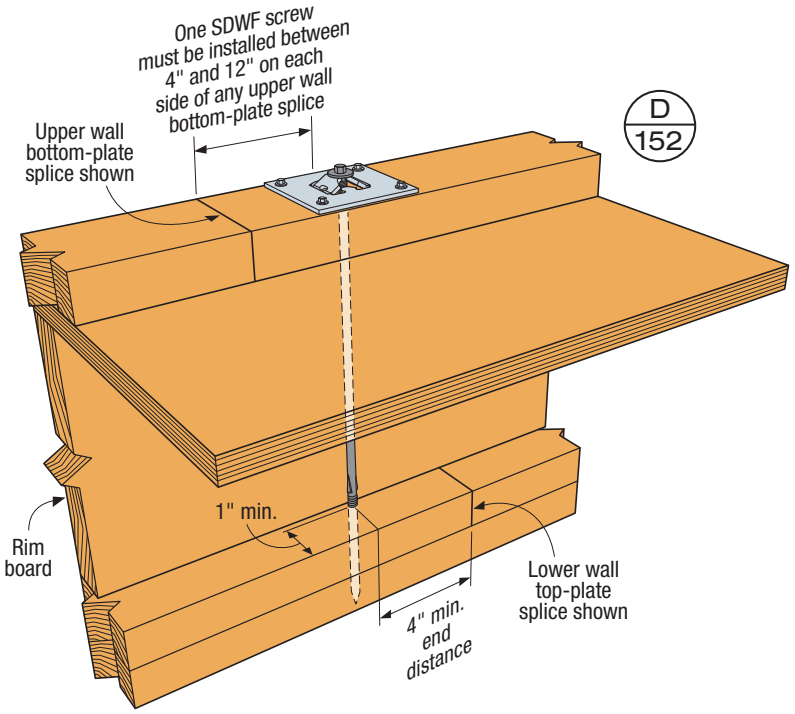

Typical Strong-Drive SDWF FLOOR-TO-FLOOR Screw and TUW Take-Up Washer Installation

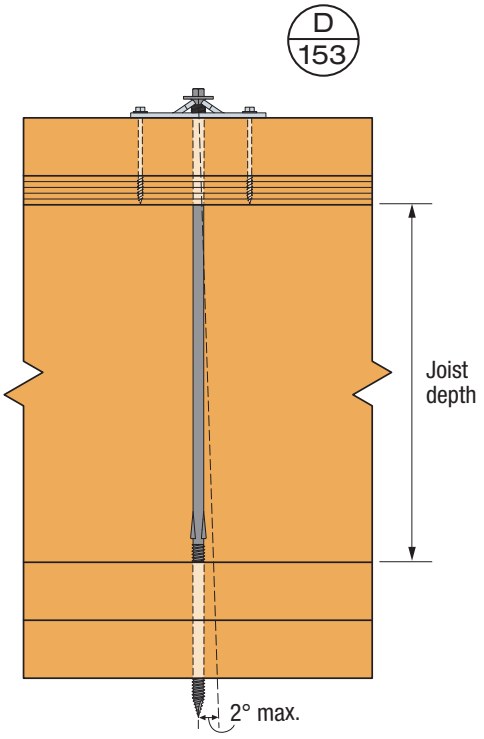

Typical Strong-Drive SDWF FLOOR-TO-FLOOR Screw Angle Limit Installation

Strong-Drive® SDWF **FLOOR-TO-FLOOR** Screw Uniform Uplift Loads

Maximum Strong-Drive SDWF FLOOR-TO-FLOOR Screw Spacing (in.) Along Wall Bottom Plate for Wind Uplift											
Bottom Plate	**Interstory Unit Wind Uplift Lbs. per Lineal Foot (plf)**										
Single 2x4	**100 plf**	**150 plf**	**200 plf**	**250 plf**	**300 plf**	**350 plf**	**400 plf**	**450 plf**	**500 plf**	**550 plf**	**600 plf**
SP	46	40	36	34	30	28	26	24	24	22	22
DF	48	42	38	34	32	30	30	26	24	22	20
SPF	46	40	36	34	32	30	26	22	20	18	16
Single 2x6	**100 plf**	**150 plf**	**200 plf**	**250 plf**	**300 plf**	**350 plf**	**400 plf**	**450 plf**	**500 plf**	**550 plf**	**600 plf**
SP	56	48	44	40	38	36	34	34	32	30	28
DF	56	48	44	40	38	34	30	26	24	22	20
SPF	52	46	42	38	34	30	26	22	20	18	16

1. Spacing listed based on the smallest of the following: single bottom plate bending allowable load, single bottom plate deflection limited to spacing/240 and ¼" max; screw allowable withdrawal load; and take-up washer allowable load.
2. Withdrawal load is based on a C_D = 1.6 and minimum 3" penetration into lower-wall double top plates.
3. Stud-to-plate connections are required to complete the load path. These connections shall not exceed the lesser of 48" o.c. or Strong-Drive SDWF Floor-to-Floor screw spacing.
4. Spacing values listed for SP lumber consider new base values adopted by AWC on June 1, 2013.
5. Spacing does not apply for joist depths of 11¼", 11⅞" and 16". Please refer to L-F-SDWFALTHT at **strongtie.com**.

Strong-Drive SDWF **FLOOR-TO-FLOOR** Screw Concentrated Uplift Loads

Model No.	Single Strong-Drive SDWF-TUW				Double Strong-Drive SDWF-TUW			
	Allowable Tension Load (160)			Deflection at Highest Allowable Load (in.)	Allowable Tension Load (160)			Deflection at Highest Allowable Load (in.)
	SP	DF	SPF		SP	DF	SPF	
SDWF2716-TUW	1,410	1,200	865	0.095	2,270	2,125	1,730	0.142
SDWF2720-TUW								
SDWF2724-TUW								
SDWF2726-TUW								
SDWF2730-TUW								

1. Allowable loads listed include a wood load duration factor of C_D = 1.6 for wind or earthquake loading with no further increase allowed.
2. Single and double Strong-Drive SDWF Floor-to-Floor applications listed are for concentrated load uplift restraint conditions (i.e., end of header, at girders, or at the end of shearwalls).

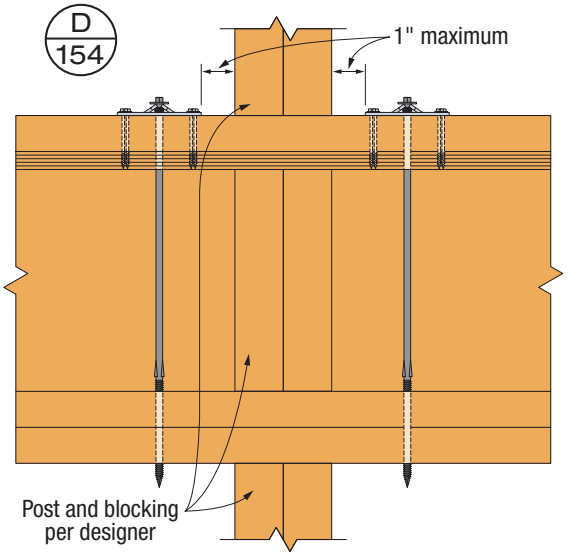

Double SDWF Concentrated Load Restraint Detail at Continuous Wall
(single SDWF similar)

Note: Stud-to-plate connections are required to complete the load path and are the responsibility of the designer.

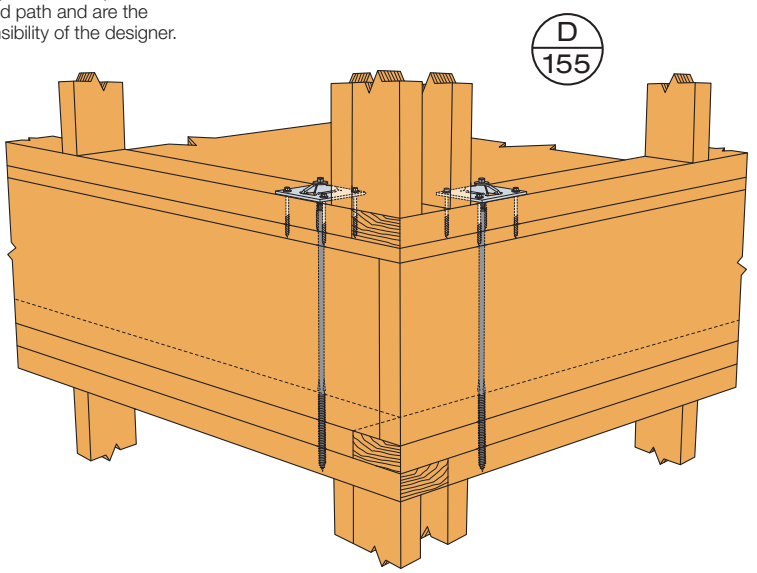

Perspective View of Corner Conditions with Double SDWF
(single SDWF similar)

Strong-Drive® WSV SUBFLOOR Screw

Fasteners for the Simpson Strong-Tie® Quik Drive® auto-feed screw driving systems offer superior performance and reduced installation time. The tool extension enables stand-up-and-drive installation.

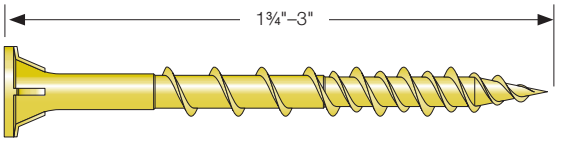

Allowable Shear (lb./ft.) for Wood Structural Panel Diaphragms with Framing of Douglas Fir–Larch or Southern Pine for Wind or Seismic Loading[1,2,3,4]

Panel Grade	Minimum Screw Penetration in Framing (in.)	Minimum Nominal Panel Thickness (in.)	Minimum Nominal Width of Framing Members at Adjoining Panel Edges and Boundaries[4,5] (in.)	Blocked Diaphragms				Unblocked Diaphragms	
				Screw spacing (inches) at diaphragm boundaries (all cases), at continuous panel edges parallel to load (Cases 3 and 4), and at all edges (Cases 5 and 6)[6]				Screws spaced 6 inches, maximum, at support edges	
				6	4	2½	2	Case 1 (no unblocked edges or continuous joints parallel to load)	All other configurations (Cases 2, 3, 4, 5 and 6)
				Screw Spacing (inches) at Other Panel Edges					
				6	6	4	3		
Structural 1	1¼	⅜	2	270	360	530	600	240	180
			3	300	400	600	675	265	200
		15/32	2	320	425	640	730	285	215
			3	360	480	720	820	320	240
Sheathing single floor		⅜	2	240	320	480	545	215	160
			3	270	360	540	610	240	180
		7/16	2	255	340	505	575	230	170
			3	285	380	570	645	255	190
		15/32	2	290	385	575	655	255	190
			3	325	430	650	735	290	215
		19/32	2	320	425	640	730	285	215
			3	360	480	720	820	320	240

For SI: 1 inch = 25.4 mm, 1 pound per foot = 14.6 N/m.

1. For framing of other species, the allowable diaphragm shear capacity is found by: (1) Determining the specific gravity for the applicable species of lumber in the NDS. (2) Finding the allowable diaphragm shear value from the table above and multiplying this value by the Specific Gravity Adjustment Factor = [1-(0.5-SG)], where SG = Specific Gravity of the framing lumber. This adjustment factor must not be greater than 1.0.
2. For shear loads of normal or permanent load duration as defined by the NDS, the values in the table above must be multiplied by 0.63 or 0.56, respectively.
3. Diaphragm construction must be in accordance with Sections 4.2.6 and 4.2.7 of the SPDWS as applicable.
4. See below for case diagrams.

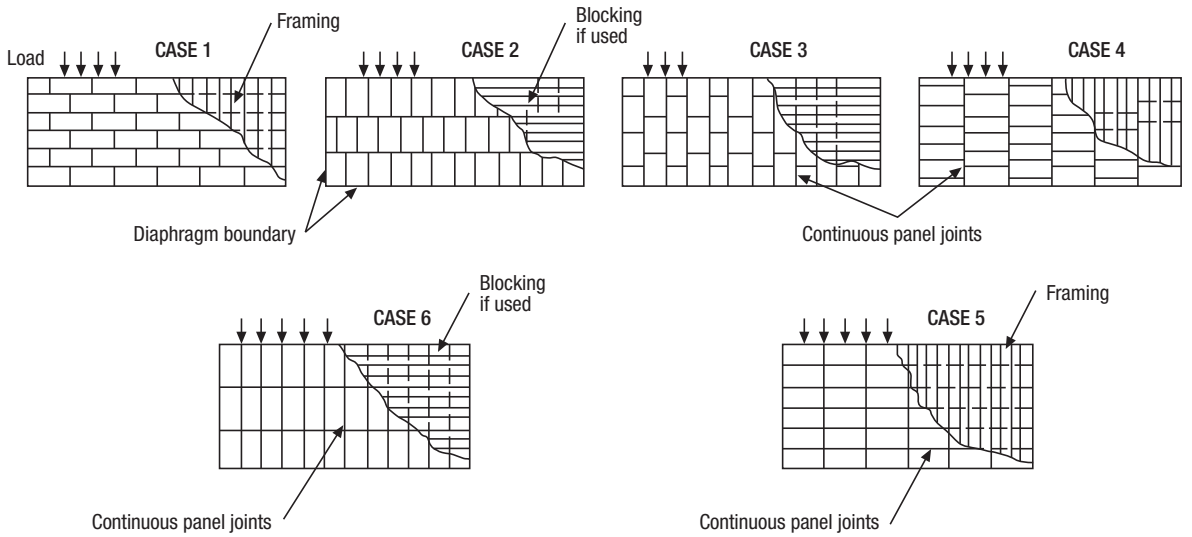

Titen Turbo™ Concrete and Masonry Screw Anchors

The new Titen Turbo concrete and masonry screw anchor features a patent-pending Torque Reduction Channel that displaces dust where it can't obstruct the thread action, reducing the likelihood of binding in the hole. The Titen Turbo is available in 3⁄16" and ¼" diameter with either a hex head (required for use with connectors) or, for other material installations, a 6-lobe-drive countersunk head. The pointed tip allows for easy attachment of wood to concrete or for wood-to-wood applications. For more information, visit **go.strongtie.com/titenturbo**.

For proper installation sequence, see installation requirements in IAPMO UES ER-712 (Concrete) and ER-716 (Masonry).

Titen 2 screws are available for a limited time and can be used for all connector applications. For installation and load data information, please visit **strongtie.com**.

Titen Turbo Screw Anchor Warning:

Industry studies show that hardened fasteners can experience performance problems in wet or corrosive environments. Accordingly, use this product in dry and noncorrosive environments only, or provide moisture barrier. Steps must be taken to prevent inadvertent sustained loads above the listed allowable loads. Overtightening and bending can initiate cracks detrimental to the hardened screw's performance. Use the Simpson Strong-Tie Titen Turbo installation tool kit (part TNTINSTALLKIT); it has a bit that is designed to reduce the potential for overtightening the screw.

Titen Turbo Hex-Head Screw

Titen Turbo Allowable Loads in Normal-Weight Concrete (f'c = 2,500 psi)

Anchor Diameter (in.)	Drill Bit Diameter (in.)	Embedment Depth (in.)	Critical Edge Distance, C_{ac} (in.)	Minimum Edge Distance, C_{min} (in.)	Minimum Spacing (in.)	Static Allowable Loads		Wind Allowable Loads	
						Tension	Shear	Tension	Shear
3⁄16	5⁄32	1¾	3	1¾	1	460	205	385	170
				3		705	205	590	170
¼	3⁄16	1¾	3	1¾	2	430	295	360	250
				3		705	310	590	260

1. Static allowable loads are calculated based on the strength design provision of ACI 318-14 Chapter 17 using a conversion factor of α = 1.4. The conversion factor α is based on the load combination 1.2D + 1.6L assuming 50% dead load and 50% live load: 1.2(0.5) + 1.6(0.5) = 1.4.
2. Wind allowable loads are calculated based on the strength design provision of ACI 318-14 Chapter 17 using a conversion factor of α = 1⁄0.6 = 1.67. The conversion factor α is based on the load combination assuming 100% wind load.
3. Tabulated values are calculated with C_{min} on one side and C_{ac} on three sides.
4. Tabulated values are for a single anchor with no influence of another anchor.

Titen Turbo Allowable Loads in CMU

Anchor Diameter (in.)	Drill Bit Diameter (in.)	Embedment Depth (in.)	Minimum Edge Distance (in.)	End Distance (in.)	Minimum Spacing (in.)	Allowable Load ($f'_m \geq$ 1,500 psi) (lb.)			
						Ungrouted CMU		GFCMU	
						Tension	Shear	Tension	Shear
3⁄16	5⁄32	1¼	3⅞	3⅞	3	115	165	—	—
		2	3⅞			—	—	265	220
		2	1½			—	—	265	220
¼	3⁄16	1¼	3⅞	3⅞	4	115	195	—	—
		2	3⅞			—	—	395	340
		2	1½			—	—	345	285

1. The allowable loads listed are based on a safety factory of 5.0 for CMU.
2. Allowable loads may not be increased for the duration of the load.
3. The attached member or element may govern the allowable load. The designer shall verify allowable load.
4. Refer to strongtie.com for additional information on the Titen Turbo and Titen 2 screws.

Titen® Concrete and Masonry Screw Anchors

Stainless-steel Titen® screw anchors are ideal for attaching various types of components to concrete and masonry, such as fastening electrical boxes or light fixtures. They offer the versatility of our standard Titen screw anchors with enhanced corrosion protection. Available in hex and Phillips flat head.

Features

- Suitable for concrete, brick, grout-filled CMU and hollow-block applications
- Suitable for some preservative-treated wood applications
- Acceptable for exterior use
- Titen drill bits included in each box
- Available in lengths from 1¼"–4"

Material: Type 410 stainless steel

Coating: Zinc plated with a protective overcoat

Preservative-treated wood applications: suitable for use in non-ammonia formulations of CCA, ACQ-C, ACQ-D, CA-B, SBX/DOT and zinc borate. Acceptable for use in exterior environments. Use caution not to damage coating during installation. The 410 stainless-steel Titen with top coat provides "medium" corrosion protection. Recommendations are based on testing and experience at time of publication and may change. Simpson Strong-Tie cannot provide estimates on service life of screws.

Titen
Stainless-Steel Phillips Flat Head Screw (PFSS)

Titen
Stainless-Steel Hex-Head Screw (HSS)

Stainless-Steel Titen Allowable Tension and Shear Loads in Normal-Weight Concrete

Dia. (in.)	Drill Bit Dia. (in.)	Embed. Depth (in.)	Critical Spacing (in.)	Critical Edge Dist. (in.)	Tension Load				Shear Load	
					$f'_c \geq$ 2,000 psi (13.8 MPa) Concrete		$f'_c \geq$ 4,000 psi (27.6 MPa) Concrete		$f'_c \geq$ 2,000 psi (13.8 MPa) Concrete	
					Ultimate (lb.)	Allowable (lb.)	Ultimate (lb.)	Allowable (lb.)	Ultimate (lb.)	Allowable (lb.)
¼	3⁄16	1	3	1½	600	150	935	235	760	190)
¼	3⁄16	1½	3	1½	1,040	260	1,760	440	810	200

1. Maximum anchor embedment is 1½".
2. Minimum concrete thickness is 1.5x embedment depth.
3. The tabulated allowable loads are based on a safety factor of 4.0.

Stainless-Steel Titen Allowable Tension and Shear Loads in Face Shell of Hollow and Grout-Filled CMU

Dia. (in.)	Drill Bit Dia. (in.)	Embed. Depth (in.)	Critical Spacing (in.)	Critical Edge Dist. (in.)	Values for 6" or 8" Lightweight, Medium-Weight or Normal-Weight CMU			
					Tension Load		Shear Load	
					Ultimate (lb.)	Allowable (lb.)	Ultimate (lb.)	Allowable (lb.)
¼	3⁄16	1	4	1½	550	110	495	100

1. The tabulated allowable loads are based on a safety factor of 5.0.
2. Maximum anchor embedment is 1½".

Titen HD® Tension and Shear Loads in Face Shell of 8-inch Lightweight, Medium-Weight and Normal-Weight Grout-Filled CMU

Size (in.)	Drill Bit Dia. (in.)	Min. Embed. Depth (in.)	Critical Edge Dist. (in.)	Critical Spacing Dist. (in.)	Values for 8-inch Lightweight, Medium-Weight or Normal-Weight Grout-Filled CMU	
					Allowable Tension Load	Allowable Shear Load
⅜	⅜	2¾	12	6	480	870
½	½	3½	12	8	690	1,385
⅝	⅝	4½	12	10	1,060	2,085
¾	¾	5½	12	12	1,600	3,000

1. The tabulated allowable loads are based on a safety factor of 5.0 for installations under the IBC and IRC.
2. Values for 8-inch wide, lightweight, medium-weight and normal-weight concrete masonry units.
3. The masonry units must be fully grouted.
4. The minimum specified compressive strength of masonry, f'_m, at 28 days is 1,500 psi.
5. Embedment depth is measured from the face of the concrete masonry unit (CMU).
6. Allowable loads may be increased 33⅓% for short-term loading due to wind or seismic forces where permitted by code.
7. Grout-filled CMU wall design must satisfy applicable design standards and be capable of withstanding applied loads.
8. Refer to the Simpson Strong-Tie® *Anchoring, Fastening and Restoration Systems for Concrete and Masonry* catalog for allowable load-adjustment factors for spacing edge and end distance.

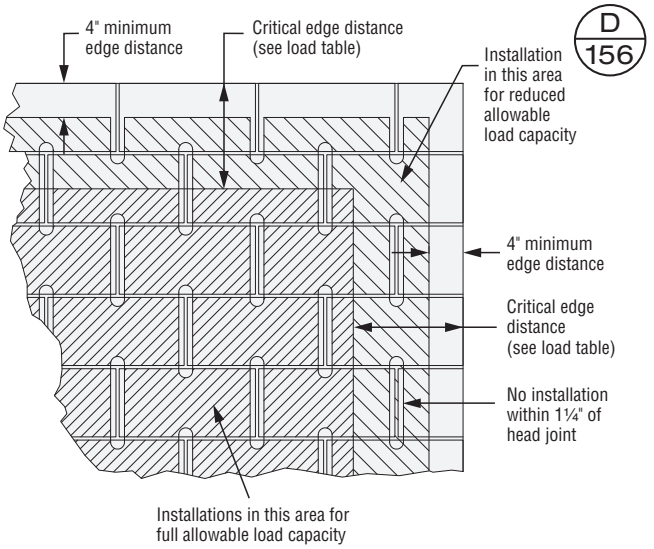

Shaded Area = Placement for Full and Reduced Allowable Load Capacity in Grout-Filled CMU

SS **Titen HD Screw Anchor**

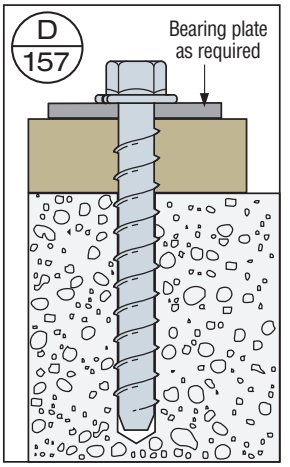

Titen HD Anchor

Titen HD Shear Loads in Normal-Weight Concrete, Load Applied Parallel to Concrete Edge

Size (in.)	Drill Bit Dia. (in.)	Embed. Depth (in.)	Minimum Edge Dist. (in.)	Minimum End Dist. (in.)	Minimum Spacing Dist. (in.)	Shear Load Based on Concrete Edge Distance, f'c ≥ 2,500 psi (17.2 MPa) Concrete		
						Ultimate (lb.)	Std. Dev. (lb.)	Allowable (lb.)
½	½	2¾	1¾	8	8	4,660	575	1,165
		3¼				—	—	1,530
		3½				6,840	860	1,710
		4½				7,800	300	1,950
⅝	⅝	2¾	1¾	10	10	4,820	585	1,205
		3¼				—	—	1,580
		3½				7,060	1,284	1,765

1. The allowable loads listed are based on a safety factor of 4.0.
2. Minimum concrete thickness is 1.5x embedment depth.

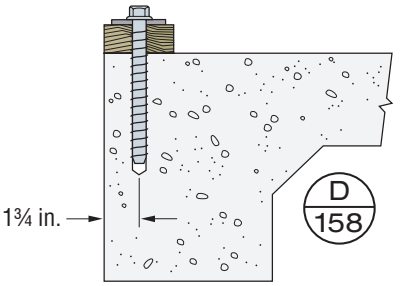

Note: Rebar not shown for clarity.

SS Titen HD is available in clear zinc, mechanically galvanized and stainless steel. See F-A-THDSS flier or **strongtie.com/titenhdss** for information about the Titen HD stainless steel.

High-Strength Anchoring Adhesives

Simpson Strong-Tie® provides high-strength anchoring adhesives formulated for anchoring and doweling in concrete and masonry applications. Our line-up of code-listed applicable solutions for high winds are epoxy-based SET-3G™ and SET-XP®, and the acrylic-based AT-XP®. Each of these are suitable for use under static and seismic loading conditions in cracked and uncracked concrete, and offer easy hole cleaning without power-brushing being required.

Additional SET-3G Features:

- Formulated to provide superior performance in cracked and uncracked concrete at elevated temperatures, SET-3G installs and performs in a variety of environmental conditions and temperature extremes.
- 1:1 ratio, two-component, high-strength, epoxy-based anchoring adhesive formula
- Cure times: 24 hours at 70°F, 72 hours at 50°F

Additional SET-XP Features:

- 1:1 ratio, two-component, high-strength, epoxy-based anchoring adhesive formula
- Cure times: 24 hours at 70°F, 72 hours at 50°F

Additional AT-XP Features:

- 10:1 ratio, two-component, high-strength, acrylic-based anchoring adhesive formula
- Dispenses easily in cold or warm environments and in below-freezing temperatures without the need to warm the cartridge
- Passed the demanding ICC-ES AC308 adverse-condition tests pertaining to reduced and elevated temperatures and long-term sustained loads

For more information about Simpson Strong-Tie anchoring solutions, visit **strongtie.com**.

SET-3G™

SET-XP®

AT-XP®

Simpson Strong-Tie offers several software solutions and mobile apps designed to significantly enhance the specification and installation processes of its anchoring solutions.

Anchor Designer™ Software for ACI 318, ETAG and CSA
Anchorage design tool for structural engineers to satisfy the strength design provisions of ACI 318 Appendix D, CAN/CSA A23.3 Annex D, ETAG 001 Annex C or EOTA TR029 design methodologies.

Adhesive Cartridge Estimator
This app quickly calculates the number of cartridges of Simpson Strong-Tie Anchoring Adhesive necessary to complete your specific installation.

Anchor Reference Tool
An app that easily identifies the Simpson Strong-Tie alternative to specified mechanical or adhesive anchor product(s), either by specified product name or code listing.

Anchor Designer Software for Allowable Stress Design
This software enables you to analyze and design anchorages using the traditional allowable stress design method.

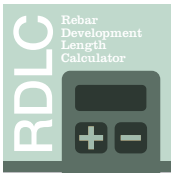

Rebar Development Length Calculator
Calculate ACI 318 tension and compression development lengths for designing post-installed rebar in concrete conditions.