U. S. DEPARTMENT OF COMMERCE

BUILDING MATERIALS AND STRUCTURES

REPORT BMS90

Structural Properties of "PHC" Prefabricated Wood-Frame Constructions for Walls, Floors, and Roofs Sponsored by the PHC Housing Coporation

by

MAHLON F. PECK

W. GAIL HOBACK, AND

VINCENT B. PHELAN

with the collaboration of

Carlile P. Winslow, Forest Service

NATIONAL BUREAU OF STANDARDS

BUILDING MATERIALS AND STRUCTURES REPORTS

On request, the Superintendent of Documents, U. S. Government Printing Office, Washington, D. C., will place your name on a special mailing list to receive notices of new reports in this series as soon as they are issued. There will be no charge for receiving such notices.

An alternative method is to deposit with the Superintendent of Documents the sum of $5.00, with the request that the reports be sent to you as soon as issued, and that the cost thereof be charged against your deposit. This will provide for the mailing of the publications without delay. You will be notified when the amount of your deposit has become exhausted.

If 100 copies or more of any report are ordered at one time, a discount of 25 percent is allowed.

Send all orders and remittances to the *Superintendent of Documents, U. S. Government Printing Office, Washington, D. C.*

The following publications in this series are available by purchase from the Superintendent of Documents at the prices indicated:

BMS1	Research on Building Materials and Structures for Use in Low-Cost Housing	10¢
BMS2	Methods of Determining the Structural Properties of Low-Cost House Constructions	10¢
BMS3	Suitability of Fiber Insulating Lath as a Plaster Base	10¢
BMS4	Accelerated Aging of Fiber Building Boards	10¢
BMS5	Structural Properties of Six Masonry Wall Constructions	15¢
BMS6	Survey of Roofing Materials in the Southeastern States	15¢
BMS7	Water Permeability of Masonry Walls	10¢
BMS8	Methods of Investigation of Surface Treatment for Corrosion Protection of Steel	10¢
BMS9	Structural Properties of the Insulated Steel Construction Co.'s "Frameless-Steel" Constructions for Walls, Partitions, Floors, and Roofs	10¢
BMS10	Structural Properties of One of the "Keystone Beam Steel Floor" Constructions Sponsored by the H. H. Robertson Co.	10¢
BMS11	Structural Properties of the Curren Fabrihome Corporation's "Fabrihome" Constructions for Walls and Partitions	10¢
BMS12	Structural Properties of "Steelox" Constructions for Walls, Partitions, Floors, and Roofs Sponsored by Steel Buildings, Inc	15¢
BMS13	Properties of Some Fiber Building Boards of Current Manufacture	10¢
BMS14	Indentation and Recovery of Low-Cost Floor Coverings	10¢
BMS15	Structural Properties of "Wheeling Long-Span Steel Floor" Construction Sponsored by Wheeling Corrugating Co	10¢
BMS16	Structural Properties of a "Tilecrete" Floor Construction Sponsored by Tilecrete Floors, Inc	10¢
BMS17	Sound Insulation of Wall and Floor Constructions	10¢
Supplement to BMS17, Sound Insulation of Wall and Floor Constructions		5¢
BMS18	Structural Properties of "Pre-Fab" Constructions for Walls, Partitions, and Floors Sponsored by the Harnischfeger Corporation	10¢
BMS19	Preparation and Revision of Building Codes	15¢
BMS20	Structural Properties of "Twachtman" Constructions for Walls and Floors Sponsored by Connecticut Pre-Cast Buildings Corporation	10¢
BMS21	Structural Properties of a Concrete-Block Cavity-Wall Construction Sponsored by the National Concrete Masonry Association	10¢
BMS22	Structural Properties of "Dun-Ti-Stone" Wall Construction Sponsored by the W. E. Dunn Manufacturing Co	10¢
BMS23	Structural Properties of a Brick Cavity-Wall Construction Sponsored by the Brick Manufacturers Association of New York, Inc	10¢
BMS24	Structural Properties of a Reinforced-Brick Wall Construction and a Brick-Tile Cavity-Wall Construction Sponsored by the Structural Clay Products Institute	10¢
BMS25	Structural Properties of Conventional Wood-Frame Constructions for Walls, Partitions, Floors, and Roofs	15¢
BMS26	Structural Properties of "Nelson Pre-Cast Concrete Foundation" Wall Construction Sponsored by the Nelson Cement Stone Co., Inc	10¢
BMS27	Structural Properties of "Bender Steel Home" Wall Construction Sponsored by The Bender Body Co	10¢
BMS28	Backflow Prevention in Over-Rim Water Supplies	10¢
BMS29	Survey of Roofing Materials in the Northeastern States	10¢
BMS30	Structural Properties of a Wood-Frame Wall Construction Sponsored by the Douglas Fir Plywood Association	10¢
BMS31	Structural Properties of "Insulite" Wall and "Insulite" Partition Constructions Sponsored by The Insulite Co	15¢
BMS32	Structural Properties of Two Brick-Concrete-Block Wall Constructions and a Concrete-Block Wall Construction Sponsored by the National Concrete Masonry Association	10¢

[List continued on cover page III]

UNITED STATES DEPARTMENT OF COMMERCE · Jesse H. Jones, Secretary

NATIONAL BUREAU OF STANDARDS · Lyman J. Briggs, Director

BUILDING MATERIALS *and* STRUCTURES

REPORT BMS90

Structural Properties of "PHC" Prefabricated Wood-Frame Constructions for Walls, Floors, and Roofs Sponsored by the PHC Housing Corporation

by MAHLON F. PECK, W. GAIL HOBACK
and VINCENT B. PHELAN
with the collaboration of
Carlile P. Winslow, Forest Service, United States Department of Agriculture

ISSUED AUGUST 18, 1942

The National Bureau of Standards is a fact-finding organization; it does not "approve" any particular material or method of construction. The technical findings in this series of reports are to be construed accordingly.

UNITED STATES GOVERNMENT PRINTING OFFICE · WASHINGTON · 1942

FOR SALE BY THE SUPERINTENDENT OF DOCUMENTS, WASHINGTON, D. C. · PRICE 15 CENTS

Foreword

This report is one of a series issued by the National Bureau of Standards on the structural properties of constructions intended for low-cost houses and apartments. These constructions were sponsored by an organization within the building industry advocating and promoting their use. The sponsor built and submitted the specimens described in this report for the program outlined in BMS2, Methods of Determining the Structural Properties of Low-Cost House Constructions. The sponsor, therefore, is responsible for the design of the constructions and for the description of the materials and method of fabrication. The Bureau is responsible for the testing of the specimens and the preparation of the report.

This report covers the load-deformation relations and strength of the structural elements when subjected to compressive, transverse, concentrated, impact, and racking loads by standardized methods simulating the loads to which the element would be subjected in actual service.

The Forest Products Laboratory, Forest Service, United States Department of Agriculture, collaborated in the tests of constructions having wood structural members.

The National Bureau of Standards does not "approve" a construction, nor does it express an opinion as to its merits for reasons given in reports BMS1 and BMS2. The technical facts presented in this series provide the basic data from which architects and engineers can determine whether a construction meets desired performance requirements.

Lyman J. Briggs, *Director.*

Structural Properties of "PHC" Prefabricated Wood-Frame Constructions for Walls, Floors, and Roofs Sponsored by the PHC Housing Corporation

by MAHLON F. PECK, W. GAIL HOBACK
and VINCENT B. PHELAN,

with the collaboration of Carlile P. Winslow, Forest Service, United States Department of Agriculture

CONTENTS

ABSTRACT

For the program on the determination of the structural properties of low-cost house constructions, the PHC Housing Corporation submitted 33 specimens representing "PHC" prefabricated wood-frame constructions for walls, floors, and roofs.

The wall specimens were subjected to compressive, transverse, concentrated, impact, and racking loads; the floor specimens to transverse, concentrated, and impact loads; and the roof specimens to transverse and concentrated loads. The transverse, concentrated, and impact loads were applied to both faces of wall specimens. For each of the loads, three like specimens were

tested; the concentrated loads were applied to the same specimens as either the transverse or the impact loads. The loads simulated the loads to which the elements of a house are subjected in actual service.

The deformation under load and the set after the load was removed were measured for each increment of load. The results are presented in graphs and tables.

I. INTRODUCTION

To provide technical facts on the performance of constructions for low-cost houses, to discover promising new constructions, and ultimately to determine the properties necessary for acceptable performance in actual service, the National Bureau of Standards has invited the cooperation of the building industry in a program of research on building materials and structures suitable for low-cost houses and apartments. The objectives of this program are described in BMS1, Research on Building Materials and Structures for Use in Low-Cost Housing.

To determine the strength of house constructions in the laboratory, standardized methods were developed for applying loads to portions of a completed house. Included in this study were masonry and wood constructions of types which have been extensively used in this country for houses and whose behavior under widely different service conditions is well known to builders and to the public. The reports on these constructions are BMS5, Structural Properties of Six Masonry Wall Constructions, and BMS25, Structural Properties of Conventional Wood-Frame Constructions for Walls, Partitions, Floors, and Roofs. The masonry specimens were built by the Masonry Construction Section of this Bureau, and the wood-frame specimens were built and tested by the Forest Products Laboratory at Madison, Wis.

The present report describes the structural properties of wall, floor, and roof constructions sponsored by one of the manufacturers in the building industry. The wall specimens were subjected to compressive, transverse, concentrated, impact, and racking loads simulating the loads to which the walls of a house are subjected. In actual service compressive loads on a wall are produced by the weight of the roof, second floor and second-story walls, if any, by furniture and occupants, and by snow and wind loads on the roof. Transverse loads on a wall are produced by wind, concentrated and impact loads by accidental contact with heavy objects, and racking loads by the action of wind on adjoining walls. Transverse loads are applied to floors by furniture and occupants; concentrated loads by furniture, for example, the legs of a piano; and impact loads by objects falling to the floor. Transverse loads are applied to roofs by wind and snow; concentrated loads by persons walking on the roof, and by tools and equipment when the roof is constructed or repaired.

The deflection and set under each increment of load were measured, because the suitability of a construction depends not only on its resistance to deformation when loads are applied but also on its ability to return to its original size and shape when the loads are removed.

II. SPONSOR AND PRODUCT

The specimens were submitted by the PHC Housing Corporation, Jackson, Miss., and represented wall, floor, and roof constructions of prefabricated units marketed under the trade name "PHC construction." The wall constructions were prefabricated demountable studs, plates, exterior siding, and interior wallboard panels. The floor was prefabricated and demountable. It consisted of joists and girts, with flooring panels on the upper surface and ceiling panels on the lower surface. The roof constructions were prefabricated, demountable rafters, headers, and roofing. These elements were fastened by bolts, pins, and steel clips.

III. SPECIMENS AND TESTS

The specimens represented three elements of a house and were assigned the following symbols: Wall, unbraced, *DL;* wall, braced, *DLa;* floor, *DM;* roof, 6-in. rafter, *DN;* and roof, 8-in. rafter, *DO.* The individual specimens were assigned the designations given in table 1.

Except as mentioned below, the specimens were tested in accordance with BMS2. That report also gives the requirements for the specimens and describes the presentation of the results of the tests, particularly the load-deformation graphs.

Table 1.—*Specimen designation*

Element	Construction symbol	Specimen designation	Load	Load applied
Wall	*DL*	*C1, C2, C3*	Compressive	Upper end.
Do	*DL*	*T1, T2, T3*	Transverse	Inside face.
Do	*DL*	*T4, T5, T6*	do	Outside face.
Do	*DL*	*P1, P2, P3*	Concentrated[a]	Inside face.
Do	*DL*	*P4, P5, P6*	do	Outside face.
Do	*DL*	*I1, I2, I3*	Impact	Inside face.
Do	*DL*	*I4, I5, I6*	do	Outside face.
Do	*DL*	*R1, R2, R3*	Racking	Near upper end.
Do	*DLa*	*R1, R2, R3*	do	Do.
Floor	*DM*	*T1, T2, T3*	Transverse	Upper face.
Do	*DM*	*P1, P2, P3*	Concentrated[a]	Do.
Do	*DM*	*I1, I2, I3*	Impact	Do.
Roof	*DN*	*T1, T2, T3*	Transverse	Do.
Do	*DN*	*P1, P2, P3*	Concentrated	Do.
Do	*DO*	*T1, T2, T3*	Transverse [b]	Do.
Do	*DO*	*P1, P2, P3*	Concentrated	Do.

[a] The impact and concentrated loads were applied to the same specimens, concentrated loads first.
[b] The transverse and concentrated loads were applied to the same specimens, transverse loads first.

Because under compressive load the shortening of the entire specimen may not be proportional to the value obtained from the compressometers attached to the specimen over only a portion of its height, the shortenings and the sets were measured with compressometers attached to the steel plates through which the load was applied, not attached to the specimen as described in BMS2.

The lateral deflections under compressive loads were measured with a deflectometer of fixed gage length which consisted of a light (duralumin) tubular frame having a leg at one end and a hinged plate at the other. The deflectometer in a vertical position was attached to the specimen by clamping the hinged plate near the upper end to one of the faces. The gage length (distance between the points of support) was 7 ft 6 in. A dial micrometer was mounted on the frame at midlength, with the spindle in contact with the wall specimen. The dial was graduated to 0.001 in., and the readings were recorded to the nearest division. There were two deflectometers on the specimen, one near each outer stud. This method of measurement was used instead of the taut-wire mirror-scale method described in BMS2.

The indentation under concentrated load and the set after the load was removed were measured, not the set only as described in BMS2. The apparatus is shown in figure 1.

The load was applied to the steel disk, *A*, to which the cross bar, *B*, was rigidly attached. The load was measured by means of the dynamometer, *C*. Two stands, *D*, rested on the

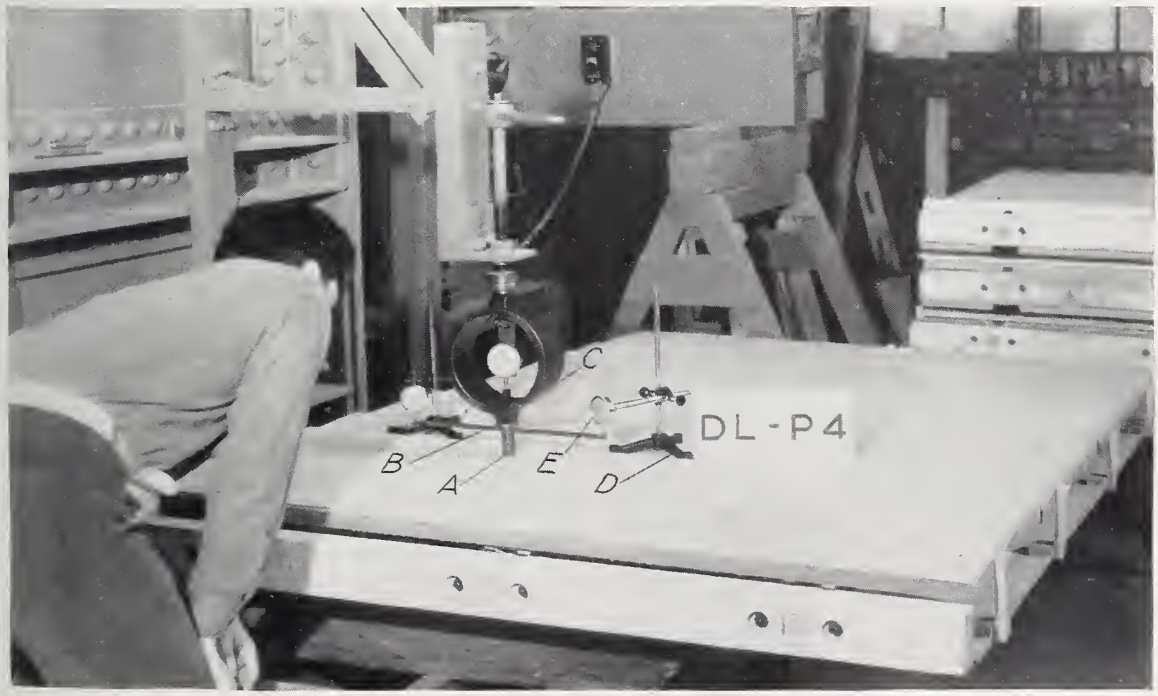

Figure 1.—*Apparatus for concentrated-load test.*

A, steel disk; *B*, cross bar; *C*, dynamometer; *D*, stand; *E*, dial micrometer.

face of the specimen, each supporting a dial micrometer, *E*, the spindle of which was in contact with the cross bar 8 in. from the center of the disk. The micrometers were graduated to 0.001 in., and readings were recorded to the nearest division. The initial reading (average of the micrometer readings) was observed under the initial load, which included the weight of the disk and the dynamometer. A load was applied to the disk, and the average of these micrometer readings minus the initial reading was taken as the depth of the indentation under load.

The sets under the impact loads were measured by means of two set gages instead of one as described in BMS2. The gages rested on the loaded face, one over each outer stud or joist. The readings measured the effect of the impact loads on the structural members.

The deformations under racking loads were measured with a right angle deformeter consisting of a steel channel and a steel angle braced to form a rigid connection. The channel of the deformeter rested on two steel plates, 4 by 4 in., ½ in. thick, and was fastened along the top of the specimen by two nails extending into the top plate, the steel angle extending downward in the plane of the specimens.

The deformations were read to the nearest 0.01 in. on a scale placed near the stop. The fiduciary mark was on an extension of the steel angle of the deformeter. The gage length (distance from the top of the specimen to the scale) was 8 ft 4⅜ in. The deformeter was used instead of the taut-wire mirror-scale described in BMS2.

Because there was no reason to believe that braces between the studs would affect the compressive, transverse, concentrated, or impact strength of the specimens *DL*, the specimens *DLa* were subjected only to racking loads.

The tests were begun January 21, 1941, and completed February 18, 1941. The sponsor's representative witnessed the tests.

IV. MATERIALS

Information on the materials was obtained from the sponsor and by inspection of the specimens. The Forest Products Laboratory identified the species of the wood. The Paper Section of the National Bureau of Standards determined the physical properties of the insulating board, and the Engineering Mechanics Section determined the moisture content of the wood and insulating board.

1. Wood

Framing.—The wood for the framing was identified as one of the southern yellow pine group, No. 1 common, S4S (surfaced four sides), in the following sizes:

- 25/32 by 3⅝ in. (nominal 1 by 4 in.)
- 1⅝ by 1⅝ in. (nominal 2 by 2 in.)
- 2½ by 3½ in. (nominal 3 by 4 in.)
- 1 5/16 by 1 5/16 in. (nominal 1½ by 1½ in.)
- 1 by 3⅝ in. (nominal 1¼ by 4 in.)
- 1⅝ by 2⅝ in. (nominal 2 by 3 in.)
- 25/32 by 7⅜ in. (nominal 1 by 8 in.)
- 1⅝ by 3½ in. (nominal 2 by 4 in.)
- 25/32 by 5⅜ in. (nominal 1 by 6 in.)
- 1⅝ by 5⅜ in. (nominal 2 by 6 in.)
- 1⅝ by 7⅜ in. (nominal 2 by 8 in.)

Plywood, exterior type.—Douglas fir, two thicknesses, ⅜ in. and ¼ in., three-ply, bonded with phenolic resin (Resinous Products and Chemical Co.) by hot-pressing, sanded two sides. The plywood complied with Commercial Standard CS45–38, Douglas Fir Plywood, wallboard grade. U. S. Plywood Corporation.

Plywood, interior type.—Douglas fir, ⅜ in. thick, three-ply, bonded with water-resistant protein glue having a soya-bean and casein base, sanded two sides. The plywood complied with Commercial Standard CS45–38, Douglas Fir Plywood, wallboard grade. U. S. Plywood Corporation.

Flooring panels.—Duali-faced Douglas fir plywood, ¾ in. thick, five-ply, bonded with water-resistant protein glue having a soya-bean and casein base, sanded two sides. U. S. Plywood Corporation.

Basemolding.—Southern yellow pine, select, grade B or better.

Corner molding.—Birch, select, grade B or better.

Spacer blocks.—Southern yellow pine, No. 1 common, 25/32 by 1⅝ in. (nominal 1 by 2 in.), S4S.

After each wall, floor, or roof specimen was tested, one face was removed to expose the framing and samples of the wood were taken for identification of the species. Photographs were made of each specimen showing the failures and the character of the wood in the framing. Figures 2 to 6 are typical specimens.

The moisture content of the wood (except moldings and spacer blocks) is given in table 2.

An electric moisture meter was used for

TABLE 2.—*Moisture content of the wood*

[Determined the day the wall, floor, or roof specimen was tested]

Wood	Construction symbol	Moisture content [a]		
		Minimum	Maximum	Average
		Percent	*Percent*	*Percent*
Framing, southern pine	*DL*	7	10	8
	DM	7	9	8
	DN	7	8	7
	DO	7	10	8
Clip rails, southern pine	*DL*	7	8	7
	DN	7	8	7
	DO	7	9	7
Siding, Douglas fir plywood	*DL*	4	6	4
Roofing, Douglas fir plywood	*DN*	4	7	5
	DO	3	5	4
Wallboard, Douglas fir plywood	*DL*	0	7	5
Ceiling, Douglas fir plywood	*DM*	6	6	6
Flooring, Duali-faced Douglas fir plywood	*DM*	5	6	6

[a] Based on weight when ovendry.

FIGURE 2.—*Wall DL.*

Typical four-foot specimen.

FIGURE 3.—*Wall DLa.*

Typical eight-foot specimen with braces.

determining the moisture content. To calibrate the meter for southern pine, 136 samples from the wall, floor, and roof specimens were dried in an oven at 212° F until the weight was constant. The moisture content was the difference between the initial weight and the weight when ovendry, expressed as a percentage of the weight when ovendry. The average value for the southern pine samples was 0.1 greater than the average of the meter readings on the same samples. The moisture contents in table 2 were obtained by adding 0.1 to the average of the meter readings and rounding the results to the nearest whole percent. The moisture content was determined on each piece of framing in each specimen and on three clip rails in each wall and roof specimen. The determinations on the plywood (siding, roofing, wallboard, flooring, and ceiling) were made by drying one sample from each specimen in an oven at 212° F until the weight was constant.

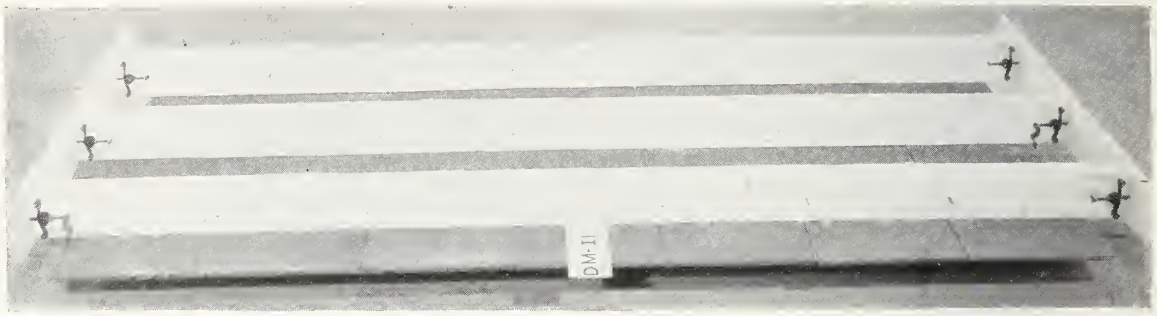

FIGURE 4.—*Floor DM.*

Typical specimen.

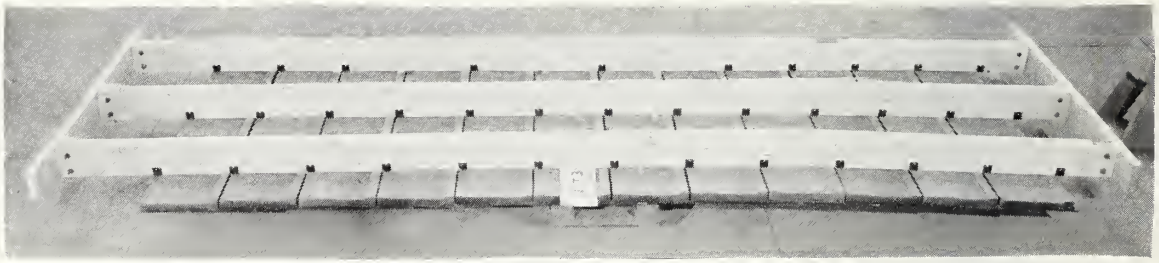

FIGURE 5.—*Roof DN.*

Typical specimen.

FIGURE 6.—*Roof DO.*

Typical specimen.

2. Insulating Board

The insulating board was made from wood fibers, produced by a cold-grinding process, felted into a rigid board. The fibers were chemically treated and intimately mixed with finely divided asphalt before felting to increase the strength, water resistance, and resistance to rot and termites. One surface of the boards had the appearance of closely woven fabric, designated "linen texture"; the other surface had the appearance of loosely woven fabric, designated "burlap texture." There were two thicknesses, 1 in. and 1¼ in. The Insulite Co., "Graylite."

The physical properties given in table 3 were determined on undamaged samples taken from the wall specimens after testing. The linear expansion, transverse strength, and deflection were determined in accordance with Federal Specification LLL–F–321a, Fiberboard; Insulating. For these properties the board complied with the requirements for class A. The values furnished by the sponsor for the tensile strength, water absorption, and thermal conductivity also comply with the requirements for class A.

The moisture content of the insulating board was determined on one sample from each wall and roof specimen by drying at 212° F until the weight was constant.

Table 3.—*Physical properties of insulating board, 1 in. and 1¼ in. thick*

[The samples were taken from the wall and roof specimens after they had been tested]

Property	Value	
	1 in.	1¼ in.
Transverse strength, long. direction [a] lb	90	111
Deflection at rupture in	0.4	0.4
Linear expansion for 45% change in relative humidity, long. direction percent	.1	.1
Density lb/ft.³	20	18
Moisture content, based on weight when ovendry percent	4.7	5.0
Tensile strength lb/in.²	[b] 375	[b] 375
Water absorption, by volume percent	[b] 5	[b] 5
Thermal conductivity (Btu/hr ft²) (°F/in.)	[b] 0.33	[b] 0.33

[a] Span, 12 in.; width of specimens, 3 in.
[b] Value furnished by sponsor.

3. Steel

The steel was basic open-hearth; hot-rolled and pickled sheet steel and cold-rolled spring steel. The sheet steel was in six thicknesses, Nos. 11, 12, 14, 16, 18, 20, black; Nos. 16 and 18, galvanized; U. S. Standard Gage. The spring steel was in three thicknesses, Nos. 13, 20, and 24, black, U. S. Standard Gage.

The mechanical properties are given in table 4 and the chemical composition in table 5. Kilby Steel Co., Anniston, Ala.

Table 4.—*Mechanical properties of the steel*

Steel	Tensile strength		Elongation in 2 in.
	Minimum	Maximum	
	lb/in.²	*lb/in.²*	*Percent*
Sheet steel, hot-rolled	48,000	58,000	22
Spring steel, cold-rolled		80,000	18

Table 5.—*Chemical composition of the steel*

Element	Content			
	Hot-rolled		Cold-rolled	
	Minimum	Maximum	Minimum	Maximum
	Percent	*Percent*	*Percent*	*Percent*
Carbon	0.05	0.15	0.10	0.20
Manganese	.30	.60	.30	.60
Phosphorus		.45		.45
Sulfur		.055		.055

Galvanizing.—The sheets were "hot-dipped" in molten zinc and complied with Navy Specification 47S10D, Commercial coating, Class D.

Forming.—The steel was sheared, punched, and cold-formed with shears and presses.

Painting.—The black sheet steel and spring steel were prepared for painting by dipping in mineral spirits.

4. Paint

Filler and paints for wood parts.—The formula for the wood filler is given in table 6 and the formulas for the exterior primer, exterior wall paint, interior primer, interior wall paint, and roof paint are given in table 7. Carpenter & Morton Co., Boston, Mass.

Table 6.—*Formula for wood filler "Carmote Cealcote"*

Ingredient	Content, by weight
	Percent
Synthetic phenolic resin	11
Processed vegetable oil	19
Drier and thinner	70

TABLE 7.—*Formulas for paints*

Name	Content, by weight		Pigment		Vehicle	
	Pigment	Vehicle	Ingredient	Content by weight	Ingredient	Content by weight
	Percent	*Percent*		*Percent*		*Percent*
Exterior primer, "Safe-T-Primer"	60.5	39.5	Lead carbonate	64.5	Linseed oil	70.0
			Titanium dioxide	12.7	Drier and thinner	30.0
			Silica and extender	22.8		
Exterior wall paint, "R. H. P. White B800"	62.0	38.0	Basic sulfate white lead	27.0	Linseed oil	90.0
			Zinc oxide	27.0	Drier and thinner	10.0
			Titanium pigment, magnesium base	42.0		
			Titanium dioxide	4.0		
Interior primer, "Carmote Primer and Sealer"	55.5	44.5	Titanium dioxide	18.2	Processed drying oils	34.0
			Calcium carbonate	81.8	Modified phenolic resin	14.0
					Drier and thinner	52.0
Interior wall paint, "Waldorf Flat White B9384"	66.0	34.0	Titanium pigment, calcium base	82.0	Processed drying oils	31.0
			Zinc oxide	4.0	Resin	2.0
			Extender	14.0	Drier and thinner	67.0
Roof paint, "Roof Green"	33.0	67.0	Black iron oxide	32.0	Synthesized oil	28.0
			Carbon black	14.0	Linseed oil	52.0
			C. P. chrome green	46.0	Drier and thinner	20.0
			Silicates	8.0		

Metal primer.—Gilsonite and asphalt in a mineral solvent. Glass and Builders Supply Co., Anniston, Ala.

Stain.—Penetrating oil stain. The formula and the name of the maker were not furnished by the sponsor.

5. Glue

Elastic cement.—Reclaimed rubber and resin dissolved in a volatile hydrocarbon. Minnesota Mining and Manufacturing Co., "Elastic Cement E. C. 194, Type 3 M."

6. Pins

Steel.—Basic electric furnace, hot-rolled, 7/16-in. diam by 5½ in. long. Kilby Steel Co.

7. Bolts

Machine.—⅜-in. diam, 4 in. long, mild steel, square head, National Coarse (N. C.) 16 threads per inch, threaded 1¼ in., blued. Nuts: mild steel, square, loose fit.

Machine.—⅜-in. diam, 6 in. long, mild steel, square head, National Coarse (N. C.) 16 threads per inch, threaded 3⅛ in., blued. Nuts: mild steel, square, loose fit.

Hook.—Mild-steel rod ⅜-in. diam, No. 11 U. S. Standard Gage, National Coarse (N. C.) 16 threads per inch, threaded ¾ in., welded to sheet-steel head, blued. Nuts: mild steel, square, loose fit.

8. Washers

⅜ in. round.—Sheet steel, 1-in. diam, No. 14 U. S. Standard Gage (0.0766 in).

⅜ in. square.—Galvanized sheet steel, 1½ by 1½ in., No. 12 U. S. Standard Gage (0.1072 in).

9. Screws

Lag.—Mild steel, ⅜-in. diam, 7 threads per inch, square head, two lengths: 2 in., threaded 1½ in., blued; 3 in., threaded 2 in., bright.

Wood.—Mild steel, two sizes: No. 10 Screw Gage (0.1900-in. diam), two lengths, 1½ in. and 3 in., 13 threads per inch, flat head, bright; No. 12 Screw Gage (0.2160-in. diam), ¾ in. long, 11 threads per inch, round head, blued.

10. Nails

The nails were made from steel wire and are described in table 8.

TABLE 8.—*Description of nails*

Type	Size	Length	Steel Wire Gage		Finish
			No.	Diameter	
	Penny	*In.*		*In.*	
Basket		⅝	18	0.0475	Bright.
Brads		⅝	16	.0625	Do.
Casing	5	1¾	14	.080	Do.
Do	6	1⅞	13	.0915	Do.
Do	6	1⅞	13	.0915	Cement-coated.
Do	8	2½	11½	.113	Bright.
Common	3	1¼	14	.080	Zinc-coated.
Do	10	3	9	.1483	Do.
Finishing	2	1	16½	.0583	Do.
Roofing	2	1	12	.1055	Do.
Do	4	1½	11½	.113	Do.

11. Felt

Felt weatherstrip, $^{11}/_{16}$ in. wide, 50 percent wool, 50 percent cotton. Thermowool Products Co., "$^{11}/_{16}$ in. Soft Grey Felt Weatherstrip."

12. Rubber

Rubber strips.—New Du Pont sponge rubber. Kastar Inc., "Stix-on."

V. WALL *DL*

1. Sponsor's Statement

Wall *DL* was a prefabricated, demountable wood-frame construction having an outside face of plywood and insulating-board siding and an inside face of plywood wallboard.

The price of this construction in Washington, D. C., as of July 1937 was $0.58/ft^2.

(*a*) *Four-Foot Wall Specimens*

The 4-ft wall specimens, shown in figure 7, were 8 ft 4¾ in. high, 5 ft 0 in. wide, and 5¾ in. thick. Each specimen consisted of a wood frame to which the faces were attached. The frame was three prefabricated wood studs, *A*, attached to a wood floor plate, *B*, and top plate, *C*, by hook bolts. The outside face was 19 pieces of prefabricated plywood and insulating-

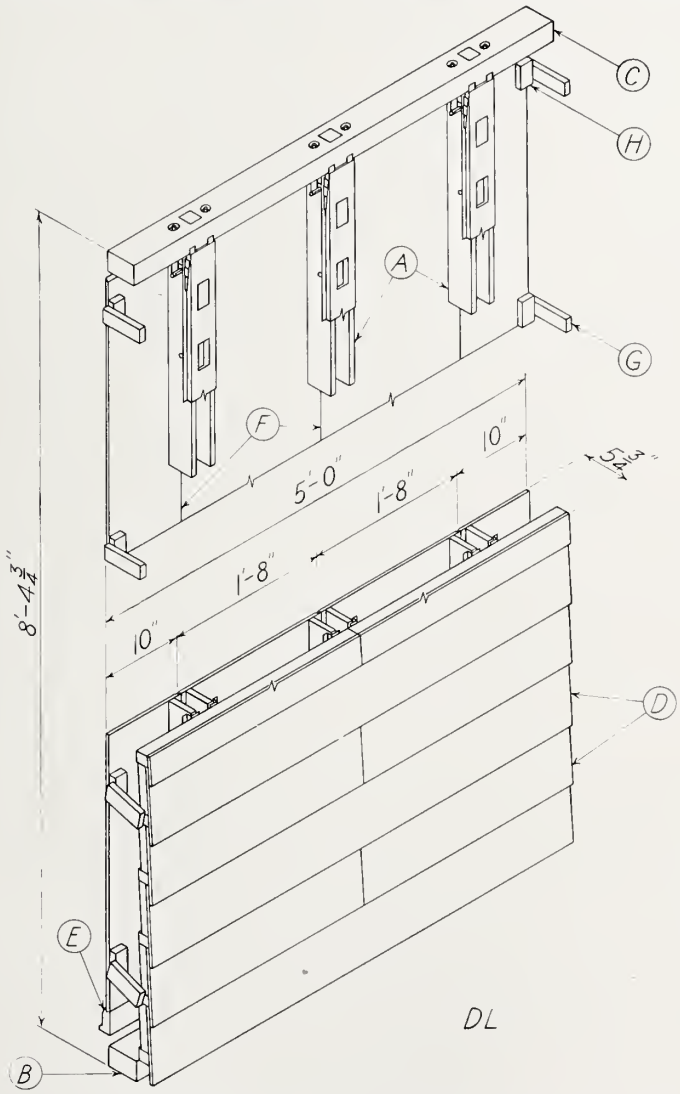

Figure 7.—*Four-foot wall specimen DL.*

A, stud; *B*, floor plate; *C*, top plate; *D*, siding; *E*, base-molding; *F*, wallboard panels; *G*, spacers; *H*, blocks.

board siding, *D*, attached by spring-steel clips. The inside face consisted of one piece of prefabricated basemolding, *E*, attached by spring-steel clips, and four prefabricated plywood wall-board panels, *F*, attached by sheet-steel clips. The overhanging edges of the faces were supported by spacers, *G*, fastened to the outside face and to blocks, *H*, on the inside face.

Studs.—The studs, *A*, shown in figure 8, were prefabricated members each consisting of two southern-pine boards, *I*, $^{25}/_{32}$ by $3\frac{5}{8}$ in. (nominal 1 by 4 in), 7 ft $11\frac{5}{8}$ in. long, and five southern-pine blocks, *J*, $1\frac{5}{8}$ by $1\frac{5}{8}$ in. (nominal 2 by 2 in), 6 in. long. The blocks were centered $9\frac{3}{8}$ in., 2 ft $2\frac{5}{8}$ in., 3 ft $7\frac{7}{8}$ in., 5 ft $1\frac{1}{8}$ in., and 6 ft $10\frac{7}{8}$ in. from the lower end of the stud. Each block was fastened to each board by two 8d casing nails. Seven holes, $^{7}/_{16}$-in. diam, extended through the boards at midwidth. The distances of the holes from the lower end of the studs were $2\frac{7}{8}$ in., 1 ft $1\frac{5}{16}$ in., 2 ft $6\frac{1}{2}$ in., 3 ft $11\frac{13}{16}$ in., 5 ft $5\frac{1}{8}$ in., 6 ft $10\frac{5}{16}$ in., and 7 ft $8\frac{3}{4}$ in. The holes were for pins to attach the stud rails. There were three steel pins, *K*, $^{7}/_{16}$-in. diam, $5\frac{1}{2}$ in. long, one through each end hole and one through the hole at midlength. Each end pin fastened a southern-pine tenon, *L*, $1\frac{5}{8}$ by $1\frac{5}{8}$ in.

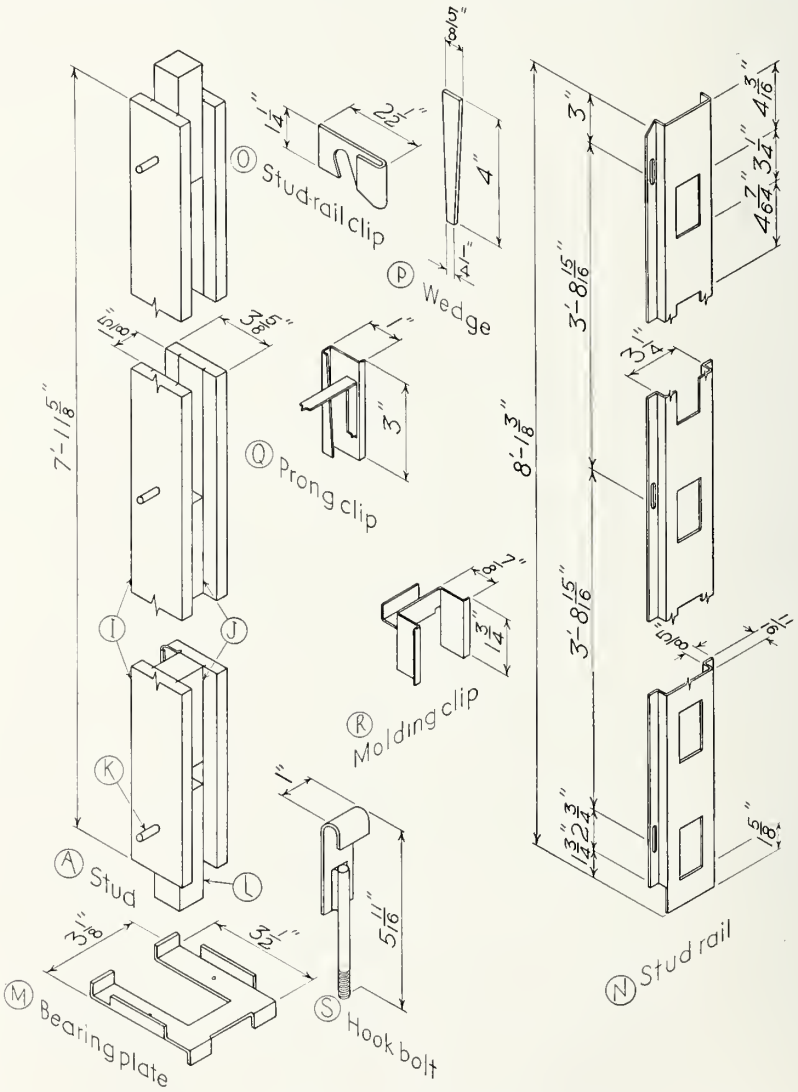

FIGURE 8.—*Details of the stud.*

A, stud; *I*, boards; *J*, blocks; *K*, pin; *L*, tenon; *M*, bearing plate; *N*, stud rail; *O*, stud-rail clip; *P*, wedge; *Q*, prong clip; *R*, molding clip; *S*, hook bolt.

(nominal 2 by 2 in), 7¼ in. long, which extended 2⅜ in. from the end of the stud and fitted the mortises in the plates. The inner surface of each board had two grooves (saw kerfs), 1/16 by 7/32 in. deep and 15/16 in. from each edge, to receive clips for attaching the inside face.

The studs were covered with one coat of white exterior primer, applied with a brush.

A sheet-steel bearing plate, *M*, No. 12 U. S. Standard Gage (0.1072 in), was on each end of the stud and fastened by one 5d casing nail in each board.

A sheet-steel stud rail, *N*, No. 18 U. S. Standard Gage (0.0490 in), extended across the outside face of each stud and 1¾ in. beyond the lower end of the stud. Each stud rail was attached to each side of the stud by three sheet-steel stud-rail clips, *O*, No. 12 U. S. Standard Gage (0.1072 in), which hooked over the pins; extended through slots, ⅜ by 1½ in., in the flanges of the stud rails; and were held by a sheet-steel wedge, *P*, No. 11 U. S. Standard Gage (0.1225 in). Thirteen holes, 1⅝ by 3¼ in., in the stud rail were spaced 7 23/64 in. on centers, the lower hole centered 3¼ in. from the lower end of the rail. The stud rails were for attaching the siding.

The projecting edge of the four sheet-steel prong clips, *Q*, No. 16 U. S. Standard Gage (0.0613 in), on the inside face of the stud, extended into the groove in one board and the prong into the other board. The clips were centered 10⅞ in., 2 ft 10⅞ in., 5 ft 2⅝ in., and 7 ft 3⅝ in. from the lower end of the stud and were for attaching the wallboard panels.

The edges of the spring-steel molding clip, *R*, No. 20 U. S. Standard Gage (0.0368 in), at the lower end of the inside face of each stud, extended into the grooves in the boards. The clip was for attaching the basemolding.

Each steel part, except the pins, was covered with one coat of black metal primer, applied by dipping.

Plates.—The floor plate and the top plate, *B* and *C*, shown in figure 9, were southern pine, 2½ by 3½ in. (nominal 3 by 4 in), 5 ft 0 in. long. There were three mortises, 1⅝ by 1⅝ in., at midwidth of each plate, one centered 10 in. from each end and one at midlength, and two holes, 1/16-in. diam, at midwidth of each plate adjacent to each mortise.

Each plate was covered with one coat of white exterior primer, applied with a brush.

Each mortise-and-tenon joint in the frame was fastened by two hook bolts, *S* (fig. 8), one on each side of the stud. The hook was sheet steel, No. 11 U. S. Standard Gage (0.1225 in), to which a steel rod, ⅜-in. diam, 4 in. long, was lapped 1 5/16 in. and fastened by two fillet welds. The thread on the end of the rod, ⅜ in., National Coarse (N. C.) 16 threads per inch, was ¾ in. long.

The hook bolts were covered with one coat of black metal primer, applied by dipping.

This bolt hooked over the pin in the stud, extended into the hole in the plate, and was fastened by a ⅜-in. round washer and a square nut countersunk into the plate.

Siding.—The siding, *D* (fig. 9), was prefabricated and was in two lengths, 5 ft 0 in. and 2 ft 6 in. Each piece had an outside face of plywood and an inside face of insulating board.

The outside face of each piece of siding was Douglas fir plywood, *T*, exterior type, ⅜ in. thick and 9½ in. wide. The inside face was insulating board, *U*, 1 in. thick and 5⅛ in. wide, fastened to the plywood, the upper edges flush, by glue. The southern-pine clip rail, *V*, 1 5/16 by 1 5/16 in. (nominal 1½ by 1½ in), along the lower edge of the insulating board was fastened to the plywood by glue and by 3d galvanized common nails, spaced about 7½ in., extending through the plywood into the clip rail. The sponge-rubber strip, *W*, ¼ in. thick and ⅜ in. wide, along the lower surface of the clip rail adjacent to the plywood was fastened by glue and by ⅝-in. basket nails spaced about 7½ in. This strip was for closing any air gap between overlapping courses of siding.

In the 5-ft 0-in. siding, the insulating board, the clip rail, and the rubber strip were each one piece 5 ft 0 in. long, but the plywood was two pieces, 1 ft 1⅛ in. and 3 ft 10⅛ in. long, the ends butted. There was a groove (saw kerf), 1/16 in. by 5/16 in. deep, along each butted end at midthickness. The butted ends were alined by a galvanized sheet-steel spline, No. 18 U. S. Standard Gage (0.0490 in), ⅝ by 9⅜ in., in the grooves.

In the 2-ft 6-in. siding, the plywood, insulating, board, clip rail, and rubber strip were each one piece 2 ft 6 in. long. The butted ends of the

siding were alined by a sheet-steel spline in the groove (saw kerf) at midthickness, 1/16 in. by 5/16 in. deep.

The outer surface of the siding was covered with one coat of white exterior primer and one coat of white exterior wall paint, applied with a brush.

Spring-steel siding clips, *X*, and half siding clips, *Y*, No. 24 U. S. Standard Gage (0.0245 in), were fastened to the lower surface of the clip rail by a 3/4-in. round-head wood screw through each hole in the clip. The clips were for attaching the siding to the frame. On each piece of 5-ft 0-in. siding there were three siding clips, *X*, centered 10 in., 30 in., and 50 in. from the end. On each piece of 2 ft 6 in. siding there was one half siding clip, *Y*, and one siding clip, *X*, centered 11/16 in. and 20 in., respectively, from the butting end.

The siding clips were covered with one coat of black metal primer, applied by dipping.

The siding was in alternate courses of 5-ft

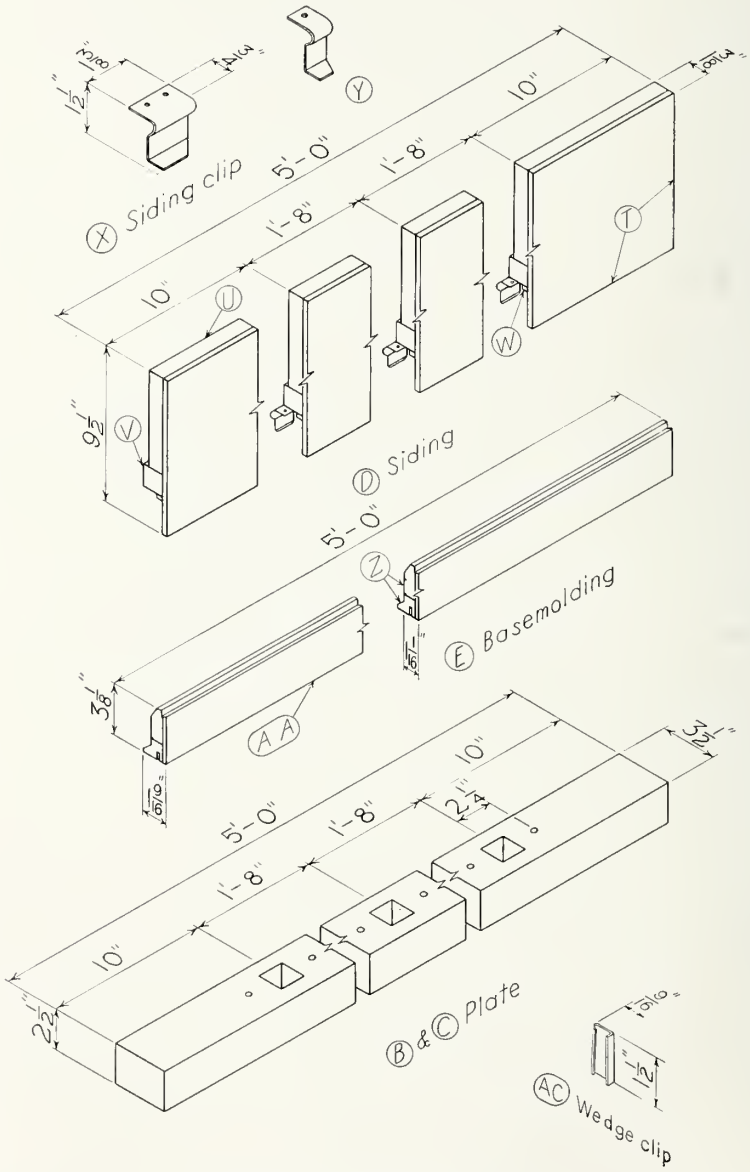

FIGURE 9.—*Details of wall DL.*

B and *C*, plate; *D*, siding; *T*, plywood; *U*, insulating board; *V*, clip rail; *W*, rubber strip; *E*, basemolding; *Z*, molded strips; *AA*, plywoed; *X* and *Y*, siding clips; *AC*, wedge clip.

0-in. and 2-ft 6-in. pieces, attached to the frame by the siding clips which extended over the lower edge of the holes in the stud rails. The butted ends of the 2-ft 6-in. pieces were alined by splines, like those in the 5-ft 0-in. pieces, in the grooves.

Each of the two southern-pine blocks, 1⅝ by 1⅝ in. (nominal 2 by 2 in), along the top edge of the upper course of siding was fastened to the top plate by two 3-in. flat-head wood screws. These blocks were to prevent displacement of the siding upward and detachment from the studs.

Basemolding.—The basemolding, *E*, (fig. 9), was prefabricated and consisted of two molded strips of southern yellow pine, *Z*, 5 ft 0 in. long, backed by a piece of Douglas fir plywood, *AA*, exterior type, ¼ in. thick and 5 ft 0 in. long. The molded strips were fastened by glue; the backing was fastened by glue and by 2d finishing nails. Three rows of nails, one along each edge and one at midwidth, extended through the backing into the strips. The nails were spaced about 7½ in.

The groove (saw kerf) ⅛ by ½ in. deep in the lower edge of the molding, ½ in. from the outside face, held the molding clips.

A 45° rabbet, ½ in. deep, in the upper edge of the molding, ⅜ in. from the outside face, received the beveled end of the wallboard panels.

The basemolding was covered with one coat of white interior primer, applied with a brush.

Wallboard panels.—The wallboard panels, *F*, shown in figure 7, were prefabricated members. The panels were Douglas fir plywood, interior type, ⅜ in. thick, 7 ft 7⅛ in. long, two full-width and two half-width panels on each specimen. The full-width panels were 1 ft 8¼ in. wide (face width 1 ft 8 in). A rabbet, ¼ by ¼ in., in each edge on opposite faces joined the panels. A groove (saw kerf), 1/16 by 7/32 in. deep, was in one edge for attaching the panels to the studs.

Along each edge of the inside face of the panels was a 45° bevel ⅛ in. deep, and along each end of the outside face a 45° bevel ⅜ in. deep.

The inside face of each panel was treated with one coat of wood filler and covered with one coat of white interior primer and one coat of white interior wall paint, applied with a brush.

Two felt strips 11/16 in. wide, were on the outside face of each panel, one along each edge approximately 1 in. from the bottom of the bevel and attached by glue.

The half-width wallboard panels were the same as one-half of a full-width panel divided along the longitudinal center line. There were four southern-pine blocks, *H* (fig. 7), 25/32 by 1⅝ in. (nominal 1 by 2 in), 3 in. long, along the overhanging edge of each half-width panel. The blocks were centered 6⅛ in., 2 ft 4⅛ in., 4 ft 9⅝ in., and 7 ft 3⅛ in. from the lower end of the panel. Each block was fastened by three 2d finishing nails extending through the wallboard into the block. The blocks were for fastening the spacers to the inside face and are not used in a house.

One edge of each panel extended into the rabbet of the adjacent panel. The other edge was attached to the frame by four sheet-steel wedge clips, *AC*, No. 20 U. S. Standard Gage (0.0368 in.), shown in figure 9. One edge of each wedge clip extended into the groove in the wallboard panel and the other edge (wedge shaped) hooked over a similar edge of a prong clip in the frame.

The wedge clips were covered with one coat of black metal primer, applied by dipping.

Spacers.—The spacers, *G* (fig. 7), were southern pine, 25/32 by 1⅝ in. (nominal 1 by 2 in.), 5¼ in. long. Four spacers on each edge of each specimen were centered 1 ft 0⅝ in., 2 ft 10 3/16 in., 5 ft 2 15/16 in., and 7 ft 7 11/16 in. from the lower end of the specimen. Each spacer was fastened by two 1½ in. flat-head wood screws, one extending into a clip rail and one extending into a block fastened to the wallboard. No spacers are used in a house.

(*b*) *Eight-Foot Wall Specimens*

The 8-ft wall specimens, shown in figure 10, were 8 ft 4¾ in. high, 8 ft 11 in. wide, and 5¾ in. thick. They were similar to the 4-ft specimens except that there were six studs, *A*; the siding, *D*, was in two lengths, 5 ft 0 in. and 3 ft 4 in.; and there were five full-width wallboard panels, *F*, and one panel 1½ in. wide. Spacers were not necessary.

The floor plate, *B*, and the top plate, *C*, were each 8 ft 11 in. long, and the basemolding was 8 ft 7⅛ in. long. All parts were painted as in the 4-ft specimens.

(c) *Comments*

Walls *DL* are used mostly for small dwellings and similar buildings of one or two stories. The walls are assembled on the building site from standardized prefabricated parts which are demountable. The height of the wall is 8 ft and the stud spacing 20 in. The width of the wall is any multiple of this spacing.

Door and window openings are 40 in. wide (two stud spaces), the center stud being cut and wood sills and lintels fastened to the adjacent studs by sheet-steel angles and wood screws. The doors and windows usually are wood of commercially available designs.

Siding for the exterior of the building is available in lengths of 20, 40, 60, and 80 in. Siding is used also for gable ends, where it is placed

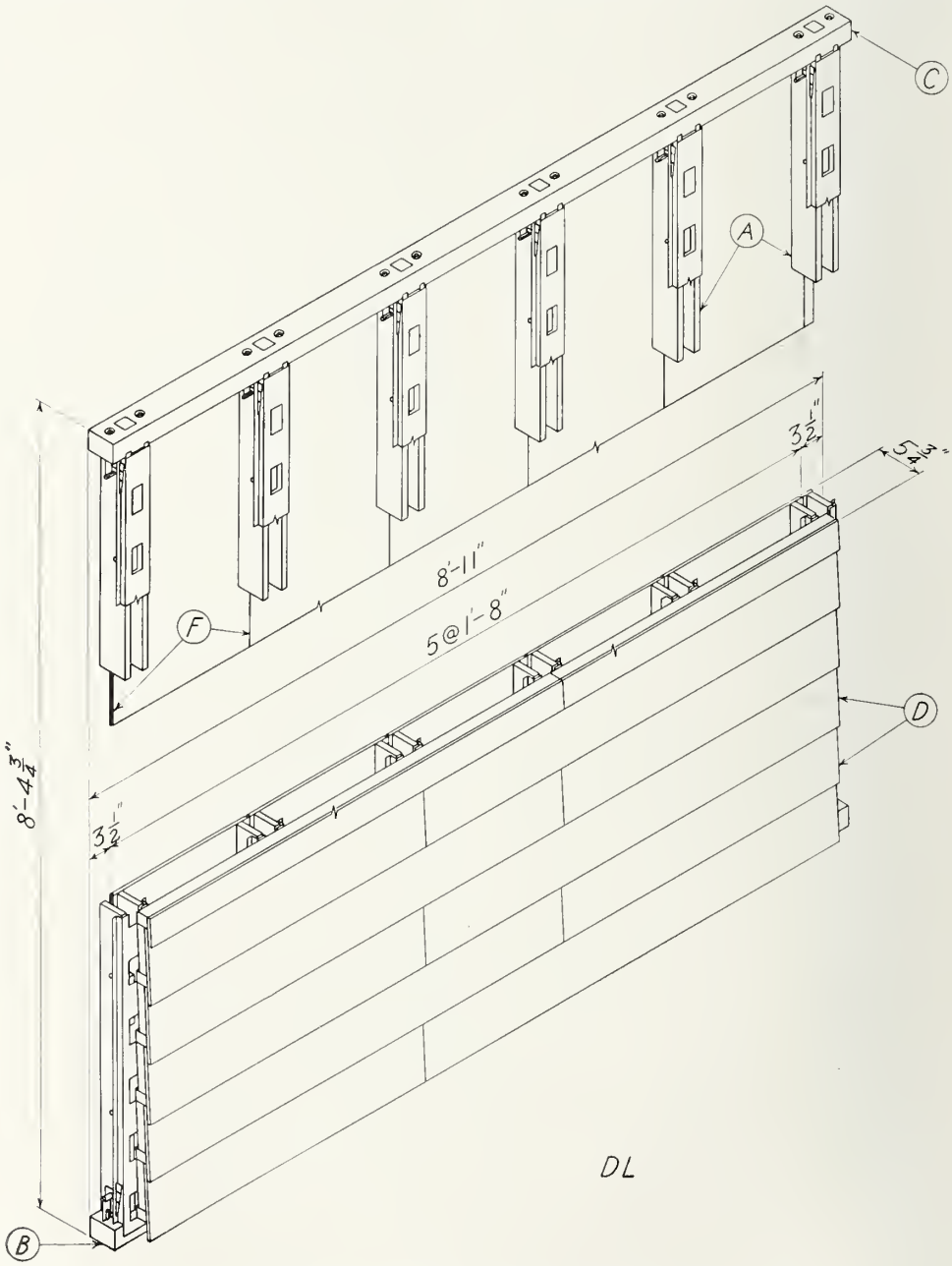

FIGURE 10.—*Eight-foot wall specimen DL.*

A, stud; *B*, floor plate; *C*, top plate; *D*, siding; *F*, wallboard panels.

vertically and attached to the ceiling joists and rafters.

Wallboard for the interior extends from floor to ceiling and is 20 in. wide (one stud space).

2. Compressive Load

Wall specimen *DL–C2* under compressive load is shown in figure 11.

The results for specimens *DL–C1*, *C2*, and *C3* are given in table 9 and in figures 12 and 13.

The compressive loads were applied 1.21 in. (one-third the thickness of the frame) from the inside face of the studs. The shortenings and sets (fig. 12) are for a height of 8 ft 4¾ in. The

Figure 11.—*Wall specimen DL–C2 under compressive load.*

A, compressometer; *B*, deflectometer.

Table 9.—*Structural properties of walls DL and DLa*

[Weight, based on face area: *DL*, 6.63 lb/ft²; *DLa*, 6.98 lb/ft²]

Construction symbol	Compressive load [a]		Transverse load; span, 7 ft 6 in.		Concentrated load; diam of steel disk, 1 in.		Impact load; span 7 ft 6 in.; weight of sandbag, 60 lb		Racking load	
	Specimen	Maximum load	Specimen	Maximum load	Specimen	Maximum load	Specimen	Maximum height of drop	Specimen	Maximum load
		[b] *Kips/ft*		*lb/ft²*		*lb*		*ft*		[b] *Kip/ft*
DL	*C1*	4.92	*T1*	171.7	*P1*	743	*I1*	10	*R1*	0.123
	C2	3.60	*T2*	150.4	*P2*	550	*I2*	10	*R2*	.159
	C3	4.86	*T3*	216.5	*P3*	700	*I3*	10	*R3*	.150
Average	----	4.46	----	179.5	----	664	----	10	----	0.144
DL	----	----	*T4*	157.0	*P4*	837	*I4*	10	----	----
	----	----	*T5*	165.5	*P5*	1,060	*I5*	10	----	----
	----	----	*T6*	256.5	*P6*	876	*I6*	10	----	----
Average	----	----	----	193.0	----	924	----	10	----	----
DLa	----	----	----	----	----	----	----	----	*R1*	0.425
	----	----	----	----	----	----	----	----	*R2*	.442
	----	----	----	----	----	----	----	----	*R3*	.450
Average	----	----	----	----	----	----	----	----	----	0.439

[a] The compressive loads were applied 1.21 in. (one-third the thickness of the frame) from the inside face of the studs.
[b] A kip is 1,000 lb.

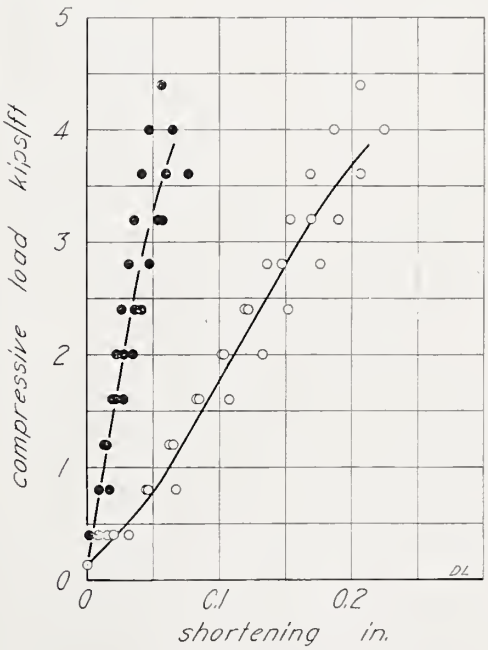

Figure 12.—*Compressive load on wall DL.*

Load-shortening (open circles) and load-set (solid circles) results for specimens *DL–C1*, *C2*, and *C3*. The load was applied 1.21 in. (one-third the thickness of the frame) from the inside face. The loads are in kips per foot of actual width of specimen.

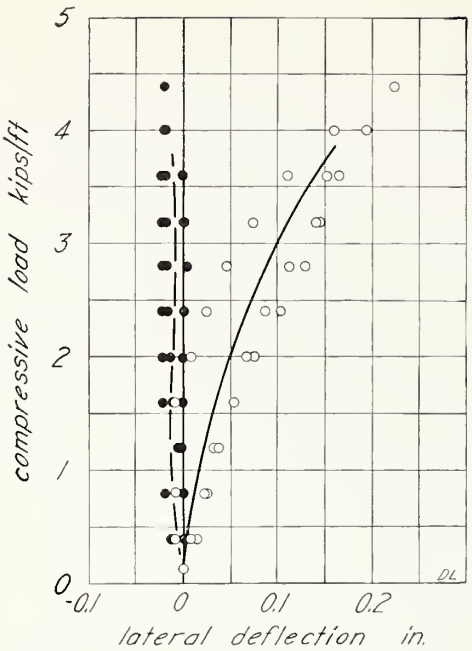

FIGURE 13.—*Compressive load on wall DL.*

Load-lateral deflection (open circles) and load-lateral set (solid circles) results for specimens *DL–C1*, *C2*, and *C3*. The load was applied 1.21 in. (one-third the thickness of the frame) from the inside face. The loads are in kips per foot of actual width of specimen. The deflections and sets are for a gage length of 7 ft 6 in., the gage length of the deflectometers.

lateral deflections (fig. 13) are plotted to the right of the vertical axis for deflections of the specimens toward the outside face and to the left for deflections toward the inside face.

The speed of the movable head of the testing machine was adjusted to 0.072 in./min.

Under loads of 4.68, 3.20, and 4.60 kips/ft on specimens *DL–C1*, *C2*, and *C3*, respectively, the top plate began to crush locally at the inside edge of the studs.

Under the maximum load, the greatest crushing was ⅛ in. No other effects were observed except that one board of an outer stud in specimen *C3* cracked longitudinally at the upper end.

3. Transverse Load

The results of the transverse loads are shown in table 9 and in figure 14 for wall specimens *DL–T1*, *T2*, and *T3*, loaded on the inside face, and in figure 15 for specimens *DL–T4*, *T5*, and *T6*, loaded on the outside face.

The speed of the movable head of the testing machine was adjusted to 0.128 in./min.

The transverse loads were applied to the in-

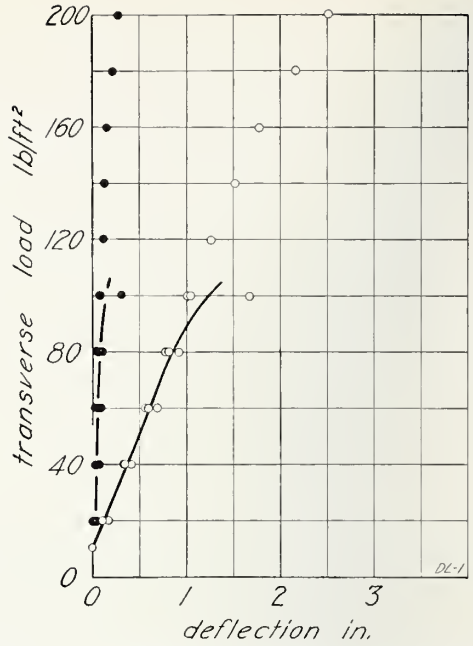

FIGURE 14.—*Transverse load on wall DL, load applied to inside face.*

Load-deflection (open circles) and load-set (solid circles) results for specimens *DL–T1*, *T2*, and *T3* on the span 7 ft 6 in.

side face (wallboard) of specimens *DL–T1*, *T2*, and *T3*. For each specimen, as the loads increased the studs deflected and the exposed

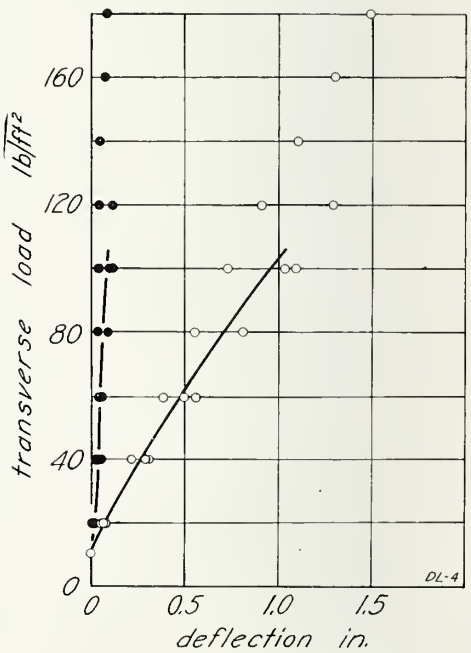

FIGURE 15.—*Transverse load on wall DL, load applied to outside face.*

Load-deflection (open circles) and load-set (solid circles) results for specimens *DL–T4*, *T5*, and *T6* on the span 7 ft 6 in.

edges of the siding between the loading rollers separated outwardly from the adjacent siding. Under a load of 60 lb/ft² on specimen *T1*, the separation was noticeable, and under 70 lb/ft² measured ⅜ in. in some places. The separation of the siding in this specimen was typical of that in specimens *T2* and *T3*. Under a load of 123 lb/ft² on *T1*, an outer stud cracked at a knot, and under the maximum load split longitudinally through the hole at midlength.

One piece of siding in specimen *T2* separated from the adjacent piece under a load of 40 lb/ft² because, when assembled, the siding clips had not engaged the stud rails. Under a load of 95 lb/ft², an outer stud cracked at three knots. Under the maximum load, this stud ruptured and the middle stud cracked.

In specimen *T3* an outer stud cracked at a load of 212 lb/ft². Under the maximum load, all the studs ruptured.

After the maximum load had been applied to each of the specimens, the wedge clips were loose.

The transverse loads were applied to the outside face (siding) of specimens *DL–T4*, *T5*, and *T6*. In specimen *T4* one outer stud ruptured at midspan under a load of 70 lb/ft². At 80 lb/ft² a half-width wallboard panel separated from an outer stud at midspan. Under the maximum load the middle stud also ruptured. In specimen *T5* under a load of 129 lb/ft², one outer stud ruptured at a knot near midspan. At 162 lb/ft² the ruptured stud displaced a half-width wallboard panel. Under the maximum load, the middle stud ruptured near the loading rollers. In specimen *T6* one outer stud cracked under a loading roller at a load of 152 lb/ft²; and under 243 lb/ft² the other outer stud cracked at midspan. Under the maximum load, all the studs ruptured and there was a separation of the wallboard along one outer stud.

4. Concentrated Load

Wall specimen *DL–P4* under concentrated load is shown in figure 1. The results are given in table 9 and in figure 16 for specimens *DL–P1*, *P2*, and *P3*, loaded on the inside face, and in figure 17 for specimens *DL–P4*, *P5*, and *P6*, loaded on the outside face.

The concentrated load was applied to the inside face (wallboard) of specimens *P1*, *P2*, and *P3* midway between two studs and 20 in. from one end of the specimen. Under the maximum load on each specimen the disk punched through the wallboard.

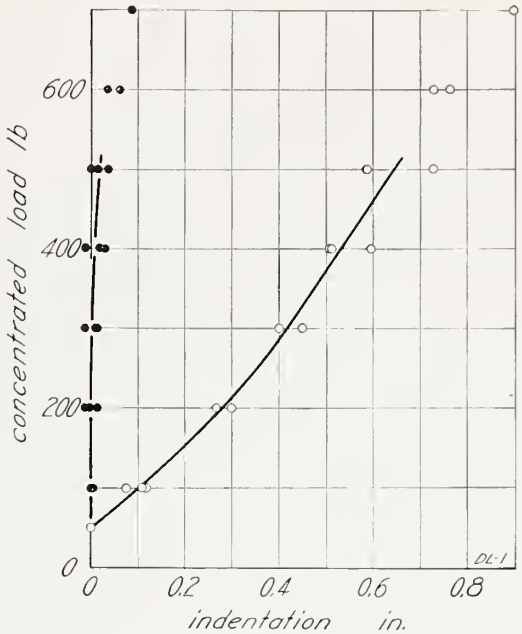

Figure 16.—*Concentrated load on wall DL, load applied to inside face.*

Load-indentation (open circles) and load-set (solid circles) results for specimens *DL–P1*, *P2*, and *P3*.

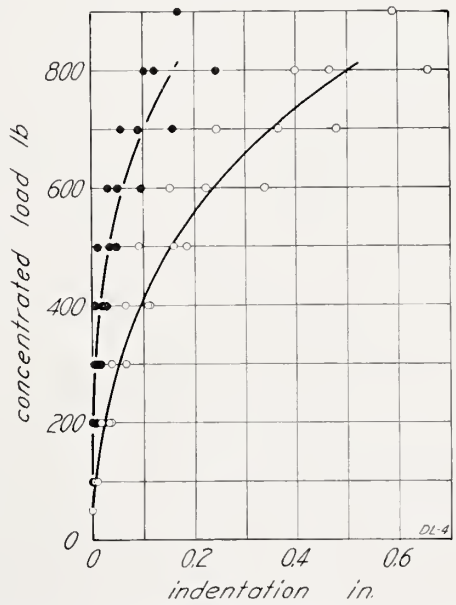

Figure 17.—*Concentrated load on wall DL, load applied to outside face.*

Load-indentation (open circles) and load-set (solid circles) results for specimens *DL–P4*, *P5*, and *P6*.

The concentrated load was applied to the outside face (siding) of specimens *P4*, *P5*, and *P6* midway between two studs and 5½ in. from the exposed edge of a piece of siding. Under a load of 800 lb. on specimens *P4* and *P6*, the siding cracked adjacent to the disk. Under the maximum load on each specimen, the disk punched through the siding.

5. Impact Load

Results of the impact-load test are given in table 9 and in figure 18 for specimens *DL–I1*, *I2*, and *I3*, loaded on the inside face, and in figure 19 for specimens *DL–I4*, *I5*, and *I6*, loaded on the outside face.

The impact loads were applied to the inside face (wallboard) of specimens *DL–I1*, *I2*, and *I3*. The sandbag struck the center of the specimen over the middle stud. On specimen *DL–I1*, after a drop of 3.5 ft, a half-width wallboard panel was loose. One piece of siding separated from the studs at a drop of 5.0 ft because, when assembled, none of the clips had engaged the stud rails. Additional pieces of siding fell off as the height of drop was increased.

Table 10.—*Effects of impact load on wall specimens DL–I4, I5, and I6, loaded on the outside face*

Description of effects	Specimen *I4*		Specimen *I5*		Specimen *I6*	
	Height of drop	Deflection	Height of drop	Deflection	Height of drop	Deflection
	ft	*in.*	*ft*	*in.*	*ft*	*in.*
Outside stud ruptured at knot	4.0	1.23	5.0	1.61	3.5	1.11
All studs ruptured	10.0	4.31	10.0	------	------	------
Face loaded:						
One or more nails pulled from clip rails	9.5	4.00	8.5	------	6.5	1.61
Separation of adjacent pieces of siding	10.0	4.31	8.5	------	------	------
Clip rail ruptured where sandbag struck	10.0	4.31	10.0	------	------	------
Face not loaded:						
Wallboard separated from a stud	4.0	1.23	5.0	1.61	5.0	1.42
Wallboard separated from all studs	6.5	2.31	9.0	------	6.0	1.56

A full-width wallboard panel separated from the studs at a drop of 7.0 ft. After a drop of 9.0 ft the middle stud was cracked where the sandbag struck.

In specimen *I2* after a drop of 6.0 ft the base-molding was loose, and after a drop of 7.0 ft a half-width wallboard panel separated from an outer stud and a piece of siding began to sepa-

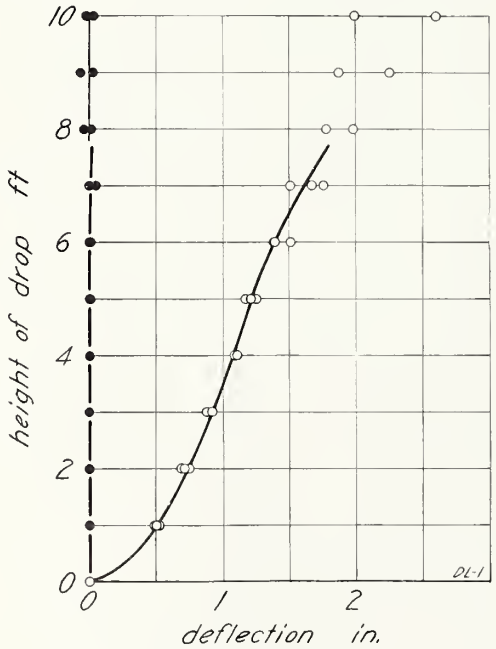

Figure 18.—*Impact load on wall DL, load applied to inside face.*

Height of drop-deflection (open circles) and height of drop-set (solid circles) results for specimens *DL–I1*, *I2*, and *I3* on the span 7 ft 6 in.

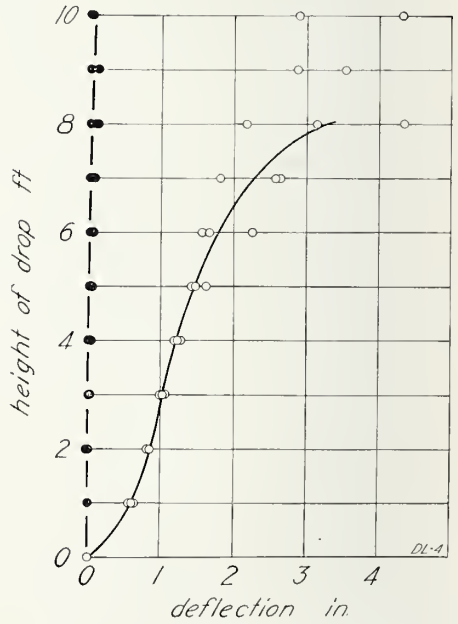

Figure 19.—*Impact load on wall DL, load applied to outside face.*

Height of drop-deflection (open circles) and height of drop-set (solid circles) results for specimens *DL–I4*, *I5*, and *I6* on the span 7 ft 6 in.

rate from the clip rail. After a drop of 10 ft the studs were undamaged.

In specimen *I3* after a drop of 9.0 ft the base-molding clips were loose. After a drop of 10 ft, three siding clips were disengaged and the middle stud was ruptured.

The impact loads were applied to the outside face (siding) of specimens *DL–I4*, *I5*, and *I6*. The sandbag struck the center of the specimen over the middle stud. The effects are given in table 10.

6. Racking Load

The results of the racking load on specimens *DL–R1*, *R2*, and *R3* (without braces) are given in table 9 and in figure 20.

At loads of 0.075, 0.075, and 0.100 kip/ft on specimens *DL–R1*, *R2*, and *R3*, respectively, there was horizontal displacement of adjacent pieces of siding and ⅜-in. or more vertical displacement of the wallboard panels.

The maximum load on each specimen was taken as the load under which the deformation was 7 in., in a height of 8 ft. Under the maximum load on each specimen, there was increased displacement of adjacent pieces of siding and of the wallboard panels.

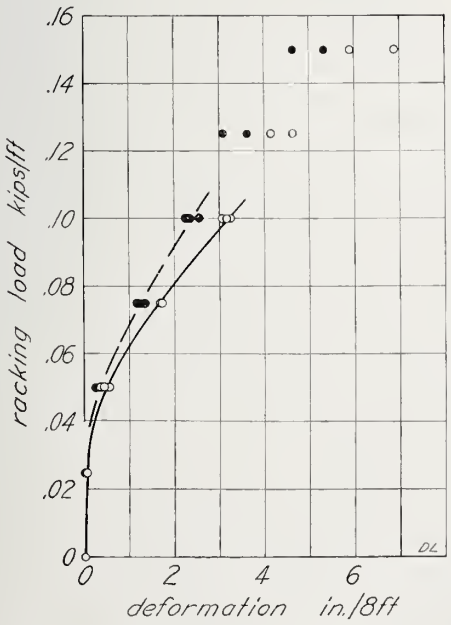

Figure 20.—*Racking load on wall DL.*

Load-deformation (open circles) and load-set (solid circles) results for specimens *DL–R1*, *R2*, and *R3*. The loads are in kips per foot of actual width of specimen.

VI. Wall *DLa*

1. Sponsor's Statement

Wall *DLa* was a prefabricated, demountable wood-frame construction having braces between the studs, an outside face of plywood and insulating board siding, and an inside face of plywood wallboard.

The price of this construction in Washington, D. C., as of July 1937 was $0.58/ft^2.

(*a*) *Description*

The 8-ft wall specimens, shown in figure 21, were 8 ft 4¾ in. high, 8 ft 11 in. wide, and 5¾ in. thick. The frame was similar to the frame for the 8-ft specimens, wall *DL*, except that at the edges there were corner studs, *AD* (not studs *A*), and there were diagonal braces, *AE*, between the studs, fastened by lag screws and bolts. The outside face and the inside face were like those for the 8-ft specimen, wall *DL*, except that there was a corner wallboard panel at each edge (not an edge panel 1½ in. wide) and a corner molding vertically along the outer edge of each corner wallboard panel, attached by spring-steel clips.

Corner studs.—The corner studs, *AD*, shown in figure 22, were like studs *A* except that the boards were 1 in. (not 25/32 in.) thick and that a southern-pine strip, *AF* (not blocks *J*), 1⅝ by 2⅝ in. (nominal 2 by 3 in.), 8 ft 4¾ in. long, flush with the inside edge of the boards, was fastened to each board by 8d casing nails, spaced about 6¾ in., extending through the boards into the strip. Each end of the strip extended 2⅜ in. beyond the boards and was tenoned 1⅝ by 1⅝ in. There were no grooves in the inner surface of the boards.

A channel 1⅝ by ⅜ in. deep along the center line of one board (outside face of stud) provided space for siding clips. There were five holes, ¼-in. diam, at midwidth of each inside face of the stud. The distances of the holes from the lower end of the stud were 2⅞ in., 1 ft 1 5/16 in., 3 ft 11 13/16 in., 6 ft 10 5/16 in., and 7 ft 8¾ in. The holes were for lag screws to fasten stud rails and braces. A groove (saw kerf), 1/16 by 7/32 in. deep, in each inside face, ¾ in. from the inside edge of the stud, received the clips for attaching the corner molding.

The corner studs were covered with one coat of white exterior primer, applied with a brush.

A sheet-steel bearing plate, *AG*, No. 12 U. S. Standard Gage (0.1072 in), on each end of the stud was fastened by one 5d casing nail in each board and one in the strip.

There was a corner stud rail, *AH*, like stud rail *N*, except that it was across both outside faces of the corner stud. Because the floor plate extended beyond the corner stud, one face of the stud rail was cut flush with the end of the stud. The stud rail was attached to each inside face of the stud by three stud-rail clips and wedges, like those for stud *A*. The stud-rail clips hooked over 2-in. lag screws, not pins as in wall *DL*.

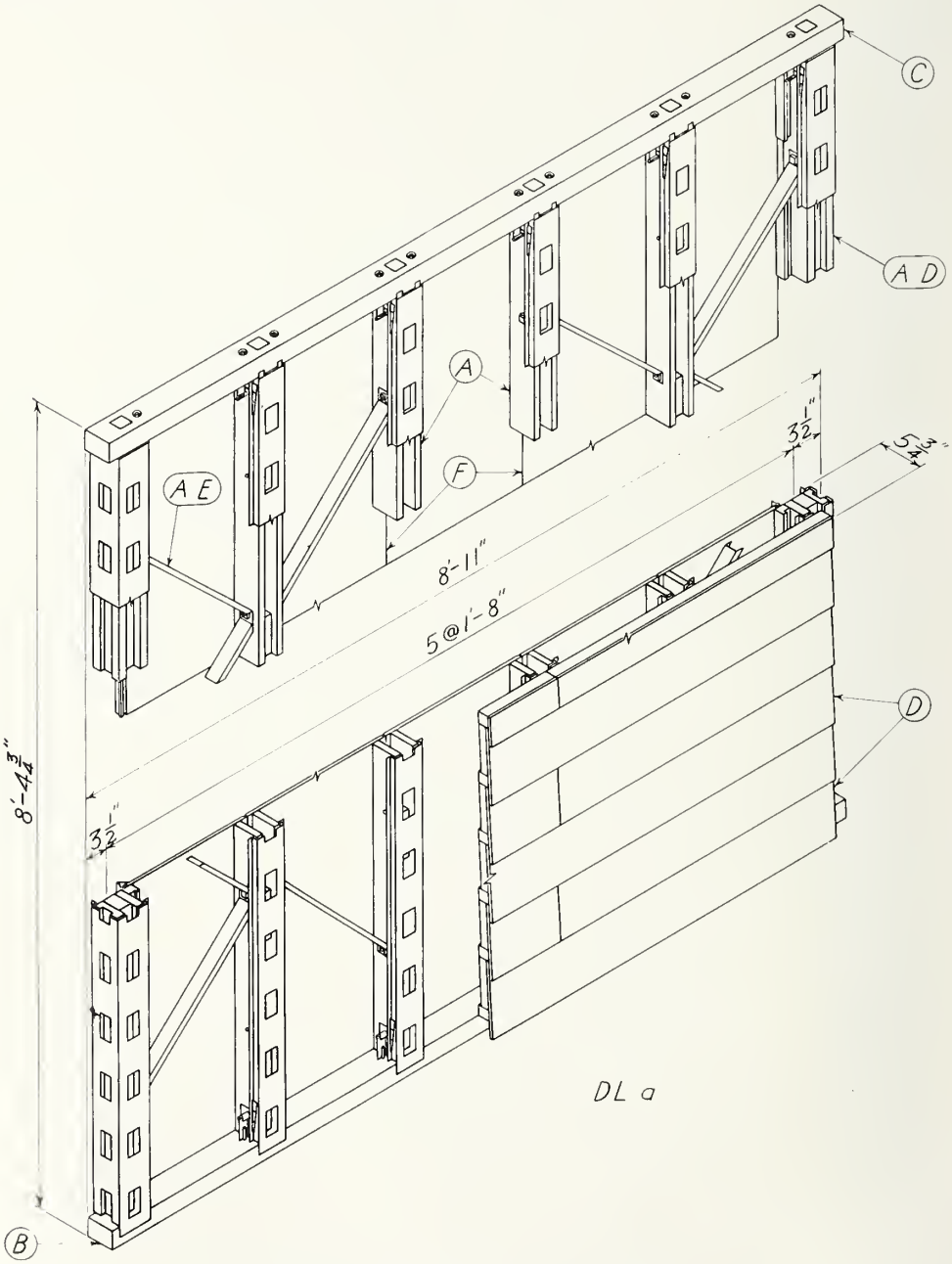

FIGURE 21.—*Eight-foot wall specimen DLa.*

A, stud; *B*, floor plate; *C*, top plate; *D*, siding; *F*, wallboard panels; *AD*, corner stud; *AE*, brace.

Four steel bracket clips, *AI*, along the inside edge of the stud, each consisting of a spring-steel clip, No. 20 U. S. Standard Gage (0.0368 in), were fastened to a sheet-steel bracket, No. 18 U. S. Standard Gage (0.0490 in), by a ⅛-in. steel rivet, No. 10 B & S Gage (0.1019 in). The bracket clips were spaced approximately 7 in., 2 ft 11⅛ in., 5 ft 3¼ in., and 7 ft 7⅜ in. from the lower end of the stud and were fastened by one edge, projecting into the groove, and by two 6d casing nails extending into the board. They were for attaching the corner molding, *AJ*, and for supporting the corner wallboard panels.

The steel parts, except the lag screws, were covered with one coat of black metal primer, applied by dipping.

The corner studs were fastened to the floor plate and top plate by one hook bolt at each end which hooked over a lag screw, not by two hook bolts over a pin, as in stud *A*.

Corner wallboard panels.—The corner wallboard panels were the same as a full-width panel, *F*, cut to a face width of 1 ft 5½ in.

Diagonal braces.—The diagonal braces, *AE*, were sheet steel, No. 14 U. S. Standard Gage (0.0766 in), and were arranged in the specimens

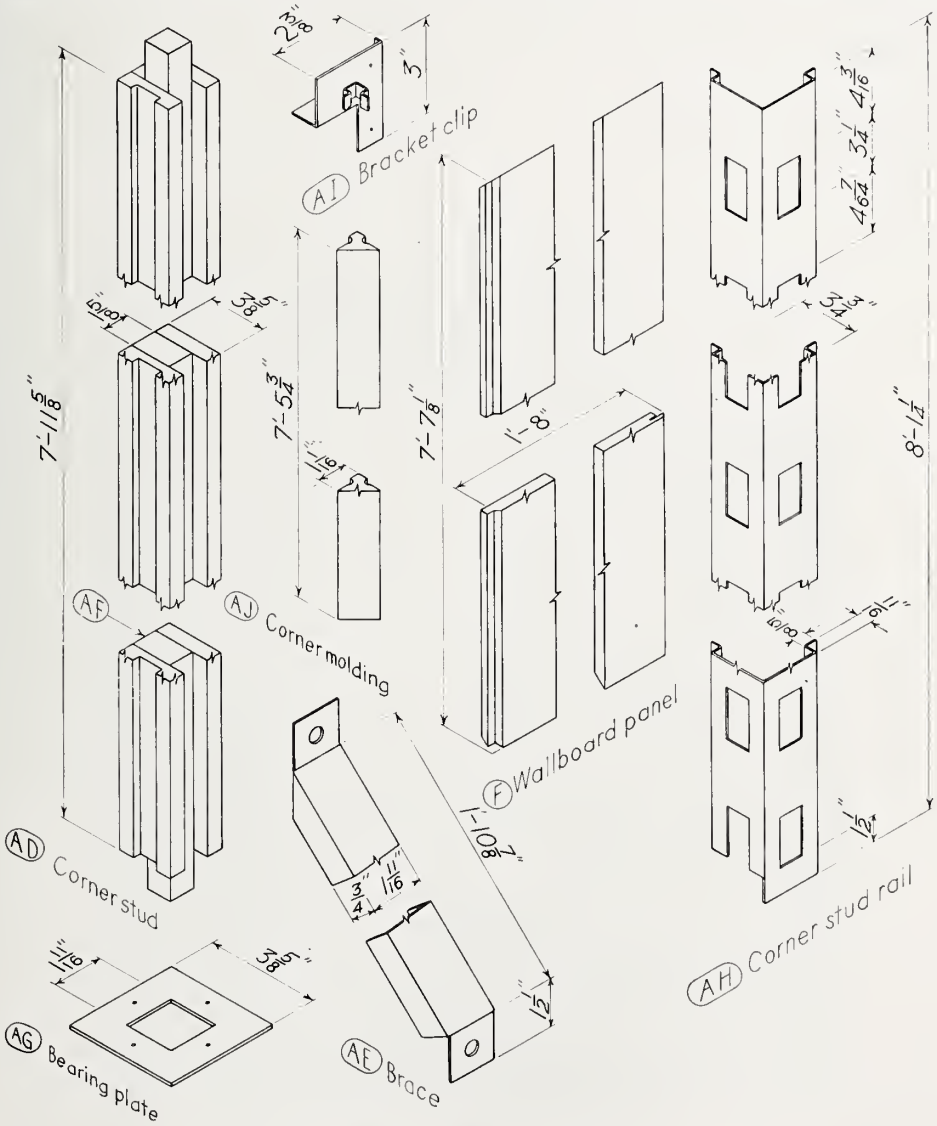

FIGURE 22.—*Details of wall DLa.*

F, wall board panel; *AD*, corner stud; *AF*, strip; *AE*, brace; *AG*, bearing plate; *AH*, corner stud rail; *AI*, bracket clip; *AJ*, corner molding.

as shown in figure 21. The braces were fastened to each corner stud by a ⅜-in. square washer and a 3-in. lag screw in the holes 1 ft 1 5/16 in. and 6 ft 10 5/16 in. from the lower end of the stud and by a ⅜-in. square washer and a 2-in. lag screw in the hole at midheight. Each brace was fastened to an intermediate stud by a ⅜-in. machine bolt, 4 in. long, with a ⅜-in. square washer under the head and under the nut.

(*b*) *Comments*

In a house there is a corner stud at each corner which is part of the two intersecting walls. In each wall for two stud spacings (40 in.) from the corner stud, braces between the studs provide resistance to racking loads. The 8-ft specimens *DLa*, therefore, represented a wall consisting of two braced walls connected by an unbraced wall.

2. Racking Load

Wall specimen *DLa–R3* is shown under racking load in figure 23.

The results of the racking load on specimens *DLa–R1*, *R2*, and *R3* are shown in table 9 and figure 24.

Under a load of 0.200 kip/ft on specimen *DLa–R1* and of 0.275 kip/ft on specimens *R2* and *R3*, the adjacent wallboard panels were displaced ½ in. vertically and the adjacent pieces of siding were displaced 1/16 in. horizontally. Under the maximum load on each specimen, the vertical displacement of the wallboard was 1¼ in. and the horizontal displacement of the siding was ⅜ in. In each specimen the lag screws (at midheight) fastening the braces pulled from the corner studs. In specimen *R3* the studs adjacent to the corner studs cracked.

Figure 23.—*Wall specimen DLa–R3 under racking load.*

A, deformeter.

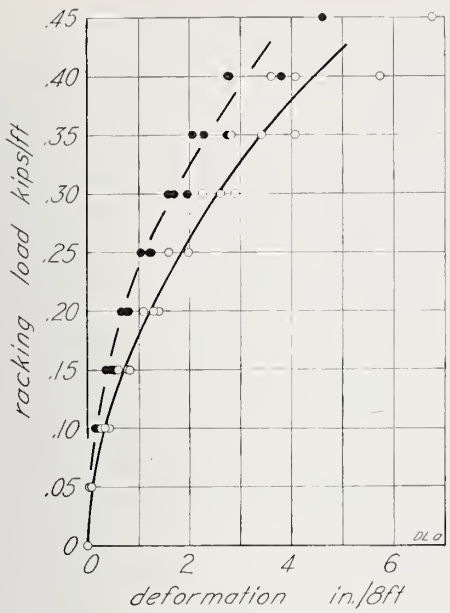

FIGURE 24.—*Racking load on wall DLa.*

Load-deformation (open circles) and load-set (solid circles) results for specimens *DLa–R1*, *R2*, and *R3*.

Racking loads were also applied to one specimen similar to *DLa–R1*, *R2*, and *R3* except that the braces were sheet steel No. 18 U. S. Standard Gage (0.0490 in), not No. 14 U. S. Standard Gage (0.0766 in). Under a load of 0.331 kip/ft the deformation was 6.8 in. The set was 4.4 in.

VII. FLOOR *DM*

1. Sponsor's Statement

Floor *DM* was a prefabricated, demountable wood-frame construction having an upper face of plywood flooring panels and a lower face of plywood ceiling panels.

The price of this construction in Washington, D. C., as of July 1937 was $0.48/ft^2.

(*a*) *Description*

The floor specimens, shown in figure 25, were 12 ft 9⅛ in. long, 5 ft 0 in. wide, and 8 13/16 in. deep. Each specimen consisted of a wood frame to which the faces were attached. The

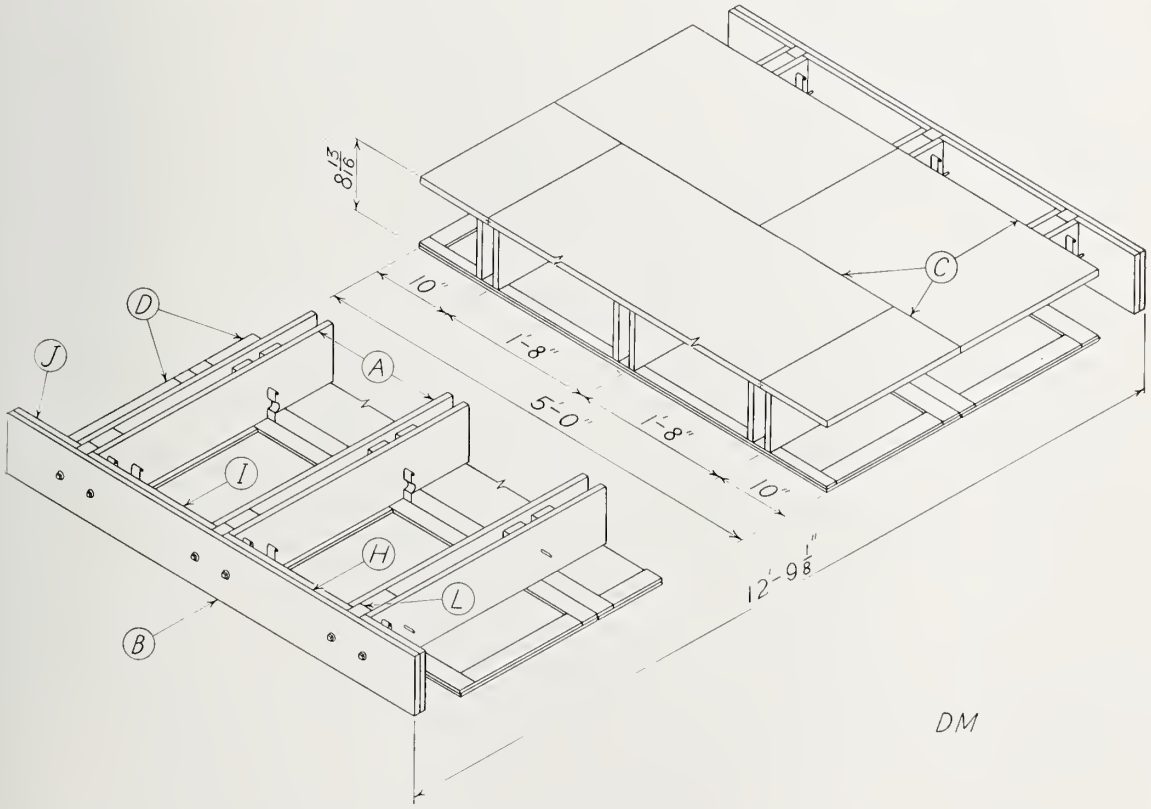

FIGURE 25.—*Floor DM.*

A, joist; *B*, girt; *C*, flooring panel; *D*, ceiling panel; *H*, *I*, *J*, boards; *L*, blocks.

frame was three prefabricated wood joists, *A*, attached at each end to a wood girt, *B*, by bolts.

The upper face was 17 prefabricated plywood flooring panels, *C*, attached by spring-steel clips. The lower face was 11 prefabricated plywood ceiling panels, *D*, attached by spring-steel clips.

Joists.—The joists, *A*, shown in figure 26, were prefabricated members each consisting of two southern-pine boards, *E*, $\frac{25}{32}$ by $7\frac{3}{8}$ in. (nominal 1 by 8 in.), 12 ft 6 in. long, and 14 southern-pine blocks $1\frac{5}{8}$ by $3\frac{1}{2}$ in. (nominal 2 by 4 in.), 2 blocks, *F*, 7 in. long and 12 blocks, *G*, 6 in. long.

The blocks *F* were $\frac{27}{32}$ in. from each end of the joist, the ends of each block being $\frac{3}{16}$ in. from each edge of the boards. Each block was fastened to each board by three 8d casing nails. The blocks *G* were in pairs $1\frac{5}{8}$ in. apart, the pairs being centered 2 ft 1 in., 3 ft 9 in., 5 ft 5 in., 7 ft 1 in., 8 ft 9 in., and 10 ft 5 in. from the end of the joist. The upper end of each block was $\frac{7}{8}$ in. below the upper edge of the boards. Each block was fastened to each board by two 8d casing nails.

Twelve holes, $\frac{7}{16}$-in. diam, extended through the boards; eight at midwidth spaced 1 ft 8 in., the end hole being 5 in. from the end of the joist, for pins to attach flooring and ceiling, and two at each end of the joist, each hole being $1\frac{1}{2}$ in. from the end and 1 in. from the edge of the board. Fastening the girts were 12 steel pins, *K* ($\frac{7}{16}$-in. diam, $5\frac{1}{2}$ in. long), one through each hole.

One coat of white exterior primer was applied to the joists with a brush.

Girts.—The girts, *B* (fig. 25), were prefabricated members, each consisting of five pieces of southern pine, $\frac{25}{32}$ by $7\frac{3}{8}$ in. (nominal 1 by 8 in.); one piece, *H*, 4 ft $11\frac{13}{16}$ in. long; two pieces, *I*, 1 ft $6\frac{3}{8}$ in. long; and two pieces, *J*, $9\frac{3}{32}$ in. long. The pieces *I* and *J* were each fastened to the piece *H*, with a space $1\frac{5}{8}$ in. between adjacent pieces, by five 6d cement-coated casing nails through the piece *H* into the pieces *I* and *J*.

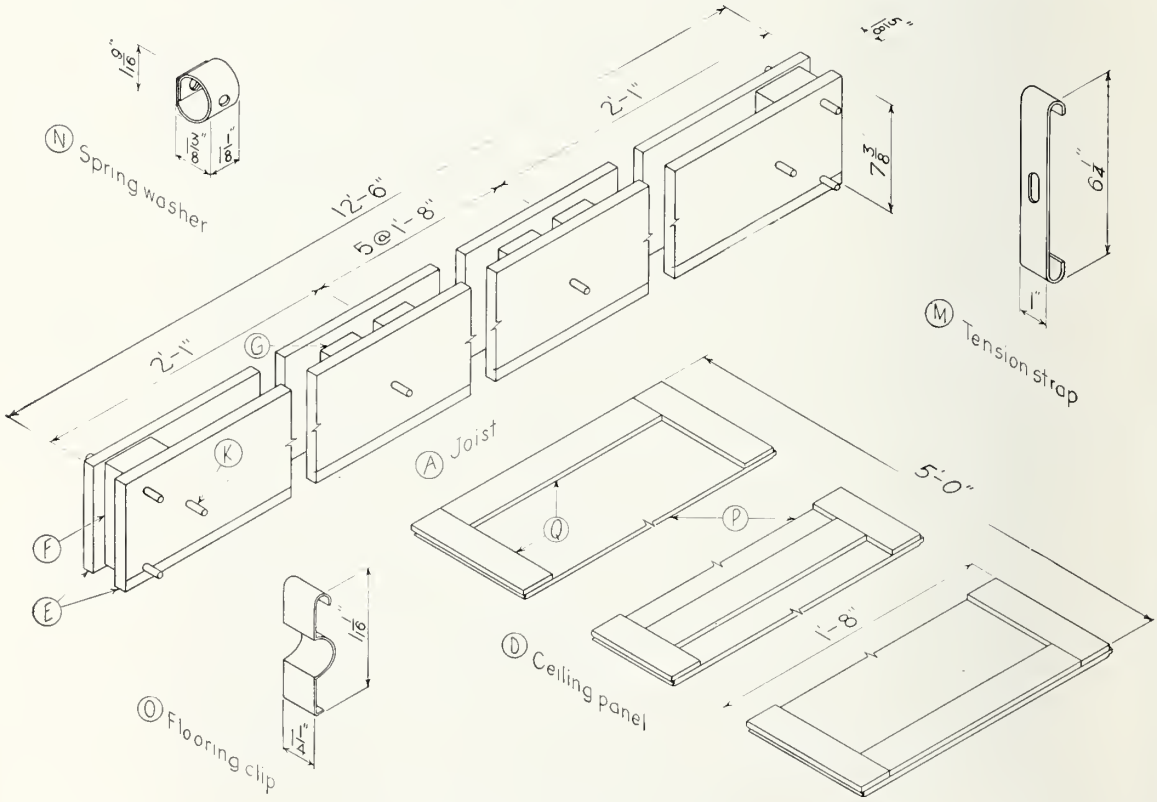

FIGURE 26.—*Details of floor DM.*

A, joist; *E*, boards; *F*, *G*, blocks; *K*, pin; *D*, ceiling panel; *P*, plywood panel; *Q*, plywood strips; *M*, tension strap; *N*, spring washer; *O*, flooring clip.

A southern-pine block, *L*, 1⅝ by 1⅝ in. (nominal 2 by 2 in.), 7 in. long, was centered in each space and fastened by two 6d cement-coated casing nails through the girt into the block.

There were two holes, 7/16-in. diam, at mid-width of each girt, adjacent to each block.

The girts were covered with one coat of white exterior primer, applied with a brush.

Each joist was attached to each girt by two ⅜-in. square-head machine bolts, 6 in. long. Each bolt, with a ⅜-in. round washer under the head, extended through one of the holes in the girt, through a tension strap (over the pins in the end of the joist), and through a spring washer and was secured by a square nut.

The tension straps, *M* (fig. 26), were sheet steel, No. 11 U. S. Standard Gage (0.1225 in.). The spring washers, *N*, were spring steel, No. 13 U. S. Standard Gage (0.0919 in.).

The tension straps and spring washers were covered with one coat of black metal primer, applied by dipping.

Flooring panels.—The flooring panels, *C* (fig. 25), were Duali-faced Douglas fir plywood ¾ in. thick, prefabricated into panels 1 ft 8 in. wide. The panels were in lengths of 10 in., 2 ft 6 in., and 5 ft 0 in. There was a groove (saw kerf) 1/16 by ⅜ in. deep (at midthickness) and a rabbet ⅜ in. by 1/16 in. deep (below the groove) along each edge and each end of each panel. The groove was for alining adjacent panels, and the rabbet was to provide close contact between the upper surfaces of the panels.

A 45° bevel 1/16 in. deep extended along each edge and each end of the upper surface.

The upper and lower surfaces of the panels were covered with one coat of stain, applied with a brush, and the upper surface was waxed.

The flooring panels were in alternate rows and were attached to the joists by spring-steel flooring clips, *O* (fig. 26), No. 20 U. S. Standard Gage (0.0368 in). Each panel was attached along one edge by a flooring clip at each joist (between the boards) which hooked over the pin through the joist and extended into the groove in the panel.

The butted edges and ends of the panels were alined by galvanized sheet-steel splines, No. 16 U. S. Standard Gage (0.0613 in), ⅝ in. wide, 1 ft 6½ in. long, in the grooves over and between the joists and 9¼ in. long in the grooves overhanging the joists.

Ceiling panels.—The ceiling panels, *D* (fig. 26), were prefabricated members 1 ft 8 in. wide and were in two lengths, 5 ft 0 in. and 2 ft 6 in.; each consisting of a plywood panel, *P*, backed by plywood strips, *Q*, 2¼ in. wide. The plywood was Douglas fir plywood, interior type, ⅜ in. thick.

A rabbet ¼ by ¼ in. extended along each edge on opposite surfaces to join the panels and a 45° bevel ⅛ in. deep along each edge of the lower surface.

In each 5 ft 0 in. panel there were five strips, *Q*, two of which were 5 ft 0 in. long and three 1 ft 3½ in. long. The 5-ft 0-in. strips were fastened by glue and by ⅝-in. wire brads, spaced about 6 in., along each edge of the upper surface, flush with the outer edge of the bevel. The 1-ft 3½-in. strips were fastened along each end of the panel on the upper surface flush with the end, and at midlength.

The 2-ft 6-in. panels were like the 5-ft 0-in. panels except that the rabbet extended along the butted end (on opposite surfaces of adjacent panels) and the bevel along the butted end on the lower surface of each panel. There was no strip *Q* 1 ft 3½ in. long at midlength.

The lower surface of each panel was treated with one coat of wood filler and covered with one coat of white interior primer and one coat of white interior wall paint, applied with a brush.

The ceiling was in alternate rows of 2-ft 6-in. and 5-ft 0-in. panels, attached to the joists by flooring clips. One edge of each panel extended into the rabbet of the adjacent panel. The other edge was attached to each joist by a flooring clip (outside the boards) which hooked over the pin through the joist and over the projecting edge of the plywood strip.

(*b*) *Comments*

Floors are assembled on the building site from standardized prefabricated parts which are demountable. The joist spacing is 20 in., and the width of the floor is any multiple of this spacing.

Flooring and ceiling are available in panels 20 in. wide, 40 in. long.

In buildings having no basement, rock-wool insulation usually is placed between the first-floor joists, supported by fiberboard attached to the joists by spring-steel clips.

2. Transverse Load

The results of the transverse load on floor specimens *DM–T1*, *T2*, and *T3* are given in table 11 and figure 27.

The speed of the movable head of the testing machine was adjusted to 0.172 in./min.

The transverse joints in the ceiling on specimen *T1* opened about ¼ in. under a load of 225 lb/ft² and one board in an outer joist ruptured under a loading roller. Under the maximum load all the joists ruptured and one flooring clip pulled through a ceiling panel.

Under a load of 110 lb/ft² on specimen *T2*, a board in one outer joist ruptured under a loading roller. At a load of 150 lb/ft², the transverse joints in the ceiling were open about ¼ in. The other outer joist ruptured near midspan under a load of 153 lb/ft². Under the maximum load, the middle joist ruptured under a loading roller.

Under a load of 120 lb/ft² on specimen *T3*, one board in an outer joist cracked at a knot outside a loading roller, and under a load of 130 lb/ft² the joist ruptured. Under the maximum load, the middle joist buckled laterally.

Table 11.—*Structural properties of floor DM*

[Weight, based on face area; 5.93 lb/ft²]

Transverse load; span, 12 ft 0 in.		Concentrated load; diam of steel disk, 1 in.		Impact load; weight of sandbag, 60 lb	
Specimen	Maximum load	Specimen	Maximum load	Specimen	Maximum height of drop
	lb/ft²		*lb*		*ft*
T1	258.3	*P1*	[a]1,000	*I1*	10
T2	161.6	*P2*	[a]1,000	*I2*	10
T3	230.0	*P3*	[a]1,000	*I3*	10
Average	216.6	Average	1,000	Average	10

[a] Specimen undamaged. Test discontinued.

3. Concentrated Load

The results of the concentrated load on specimens *DM–P1*, *P2*, and *P3* are given in table 11 and in figure 28.

After the concentrated load had been applied, the set in specimen *DM–P1* was 0.031 in.; in *P2*, 0.037 in.; and in *P3*, 0.028 in. No other effects were observed.

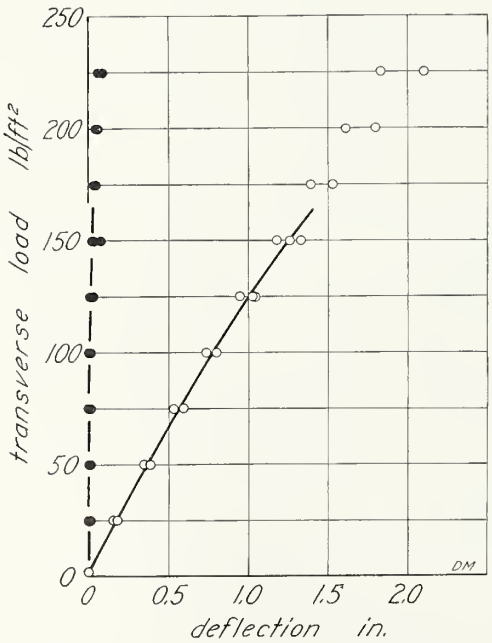

Figure 27.—*Transverse load on floor DM.*

Load-deflection (open circles) and load-set (solid circles) results for specimens *DM–T1*, *T2*, and *T3* on the span 12 ft 0 in.

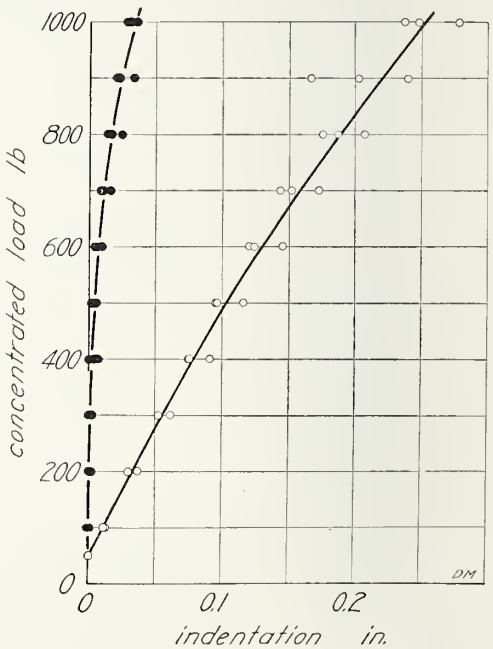

Figure 28.—*Concentrated load on floor DM.*

Load-indentation (open circles) and load-set (solid circles) results for specimens *DM–P1*, *P2*, and *P3*.

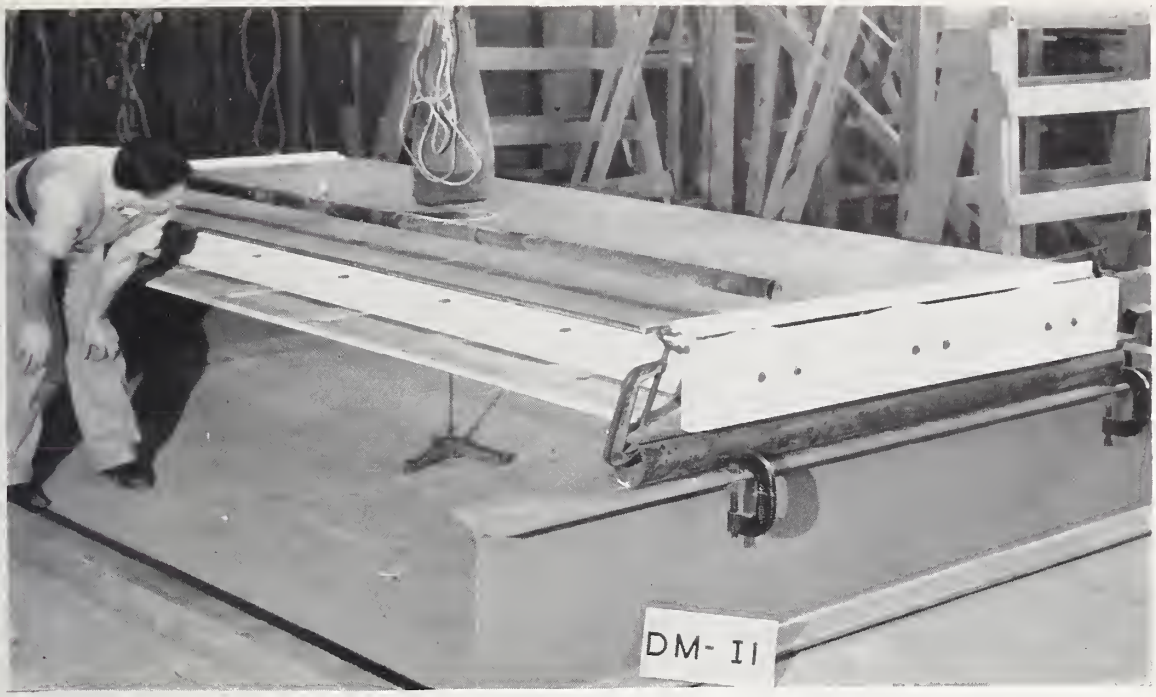

FIGURE 29.—*Floor specimen DM–I1 during the impact test.*

4. IMPACT LOAD

Floor specimen *DM–I1* during the impact test is shown in figure 29. The results for specimens *DM–I1*, *I2*, and *I3* are shown in table 11 and in figure 30.

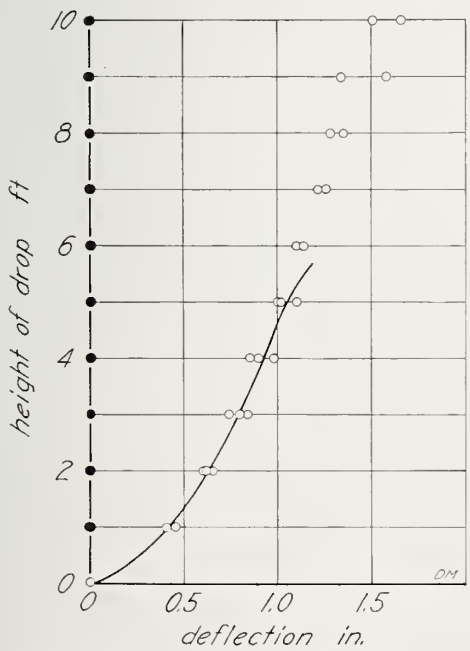

FIGURE 30.—*Impact load on floor DM.*

Height of drop-deflection (open circles) and height of drop-set (solid circles) results for specimens *DM–I1*, *I2*, and *I3*, on the span 12 ft 0 in.

At a drop of 2.5 ft on specimen *I2*, a flooring clip sprang free from a ceiling panel near a supporting roller. The joints in the flooring began to open after a drop of 4.0 ft on specimens *I1* and *I2* and a drop of 5.0 ft on specimen *I3*. A clip pulled through a ceiling panel at a drop of 6.0 ft on specimen *I1* and 5.0 ft on specimens *I2* and *I3*. After a drop of 8.0 ft, one or more ceiling panels were separated from the joists in specimen *I1*; after 5.5 ft, in specimen *I2*; and after 10.0 ft, in specimen *I3*. At a drop of 8.5 ft on specimen *I2*, two 10-in. flooring panels fell from the edge of the specimen.

After the 10-ft drop on each specimen, the joists were undamaged. Most of the ceiling and flooring panels were loose.

VIII. ROOF *DN*

1. SPONSOR'S STATEMENT

Roof *DN* was a prefabricated, demountable wood-frame construction having an upper face of plywood and insulating-board roofing.

The price of this construction in Washington, D. C., as of July 1937 was $0.39/ft^2.

(a) *Description*

The roof specimens, shown in figure 31, were 14 ft 9⅜ in. long, 5 ft 0 in. wide, and 7⅜ in. deep. Each specimen consisted of a wood frame to which the upper face was attached. The frame was three prefabricated wood rafters, *A*, attached at each end to a wood header, *B*, by bolts. The upper face was 13 pieces of prefabricated plywood and insulating-board roofing, *C*, attached by spring-steel clips.

Rafters.—The rafters, *A*, shown in figure 32, were prefabricated members each consisting of two southern-pine boards, *D*, 25/32 by 5⅜ in. (nominal 1 by 6 in), 14 ft 6⅛ in. long, and seven southern-pine blocks, *E*, 1⅝ by 3½ in. (nominal 2 by 4 in), 8⅞ in. long, the ends mitered, parallel, 37 degrees. The blocks were centered 2 ft 4⅜ in., 4 ft 5⅛ in., 6 ft 6 in., 8 ft 6⅞ in., 10 ft 7¾ in., 12 ft 8⅝ in., and 13 ft 10⅛ in. from the upper end of the rafter; the upper surfaces of the blocks were ⅜ in. below and parallel to the upper edge of the boards. Each block was fastened to the boards by three 8d casing nails through each board into the block.

There were 19 holes, 7/16-in. diam, through each board; 4, *F*, for fastening the headers, 1, *G*, for fastening the rafter at the eave, 2, *H*, for fastening the rafter at the ridge, and 12, *I*, for fastening studs for attic partitions.

In these specimens the holes *G*, *H*, and *I* were not used. The holes *F* were 1¾ in. from the ends and 1 3/16 in. from the edges of the boards. The hole *G* was 5⅜ in. from the end and 1⅜ in. from the upper edge of the boards. Of the holes *H*, the upper one was 3⅝ in. from the end and 1⅜ in. from the upper edge of the boards. The center line of the holes forms an angle of 53° with the edge of the boards, and the spacing of the holes was 1½ in. The holes *I* were in pairs adjacent to the upper six blocks. The center line of the holes was 13/16 in. from the block, and the holes were 1⅜ in. from the edges of the board.

The rafters were covered with one coat of white exterior primer, applied with a brush.

There were 13 sheet-steel rafter straps, *J*, No. 16 U. S. Standard Gage (0.0613 in), across the upper edge of each rafter, spaced 1 ft 0 7/16 in. on centers, the upper strap being 1 ft 3⅞ in. from

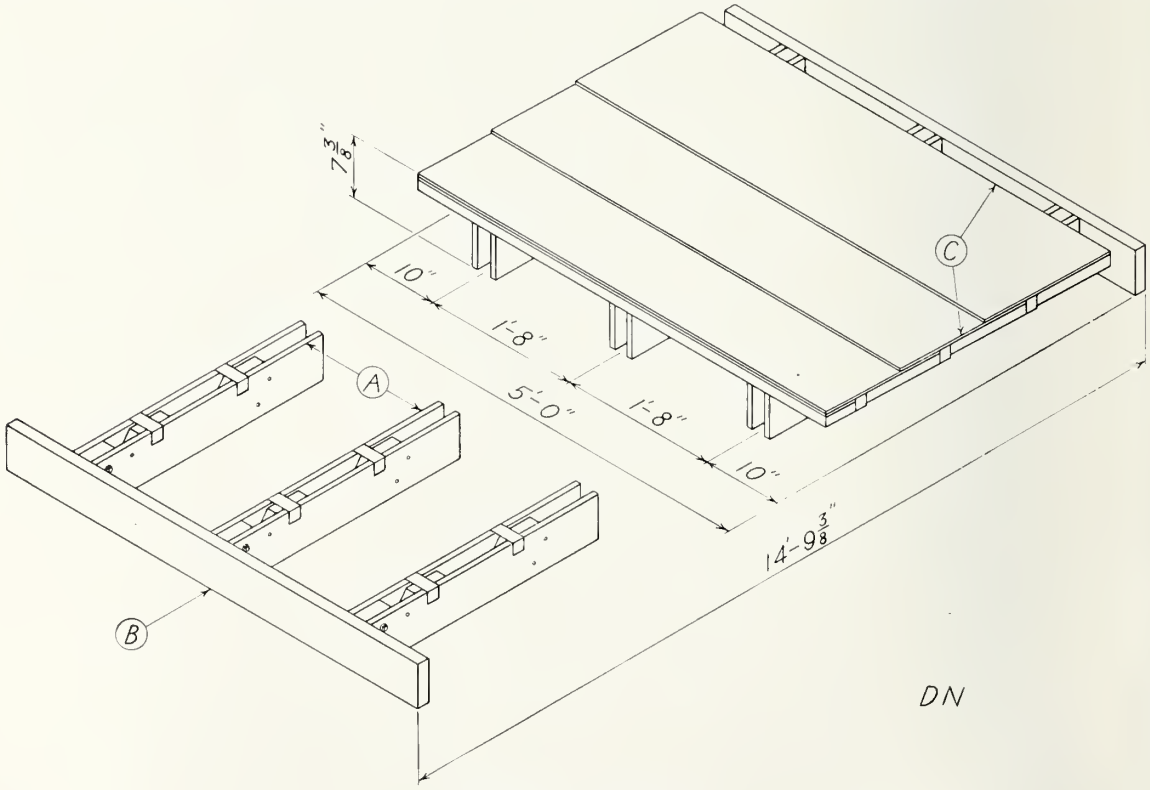

FIGURE 31.—*Roof DN.*
A, rafter; *B*, header; *C*, roofing.

the upper end of the rafter. Each rafter strap was fastened by one 6d cement-coated casing nail in the edge and one 2d galvanized roofing nail in the side of each board. The straps were for attaching the roofing.

The rafter straps were covered with one coat of black metal primer, applied by dipping.

Headers.—The headers, *B* (fig. 31), were prefabricated members, each consisting of a southern-pine board, 1⅝ by 5⅜ in. (nominal 2 by 6 in), 4 ft 11⅞ in. long, and three southern-pine blocks, 1⅝ by 3½ in. (nominal 2 by 4 in), 5⅜ in. long. The blocks were centered 9 15/16 in., 2 ft 5 15/16 in., and 4 ft 1 15/16 in. from the end of the board and were each fastened by three 10d common nails through the board into the block. Two holes, 7/16-in. diam, were at midwidth of each block, one 1 3/16 in. from each end of the block.

The headers were covered with one coat of white exterior primer, applied with a brush.

Each rafter was attached to each header by two ⅜-in. square-head machine bolts, 4 in. long. The bolts, with a ⅜-in. round washer under the head, extended through the holes in the rafter and in the header and were fastened by a ⅜-in round washer and a square nut.

Roofing.—The roofing pieces, *C* (fig. 32), were prefabricated members 1 ft 6 in. by 5 ft 0 in. Each piece had an outside face, *K*, of plywood and an inside face of insulating board, *L*.

The outside face, *K*, of each piece was two strips of Douglas fir plywood, exterior type, ⅜ in. thick, 1 ft 1⅞ in. and 3 ft 10⅛ in. long, the ends butted. A groove (saw kerf) 1/16 by 5/16 in. deep extended along the butted end of each strip. The butted ends were alined by a galvanized sheet-steel spline, No. 16 U. S. Standard Gage (0.0613 in), ⅝ by 1 ft 5⅞ in., in the grooves. The inside face, *L*, was insulating board 1¼ in. thick, 10½ in. by 5 ft 0 in. long, fastened to the plywood, the upper edges flush, by glue.

A southern-pine clip rail, *M*, 1⅝ by 1⅝ in.

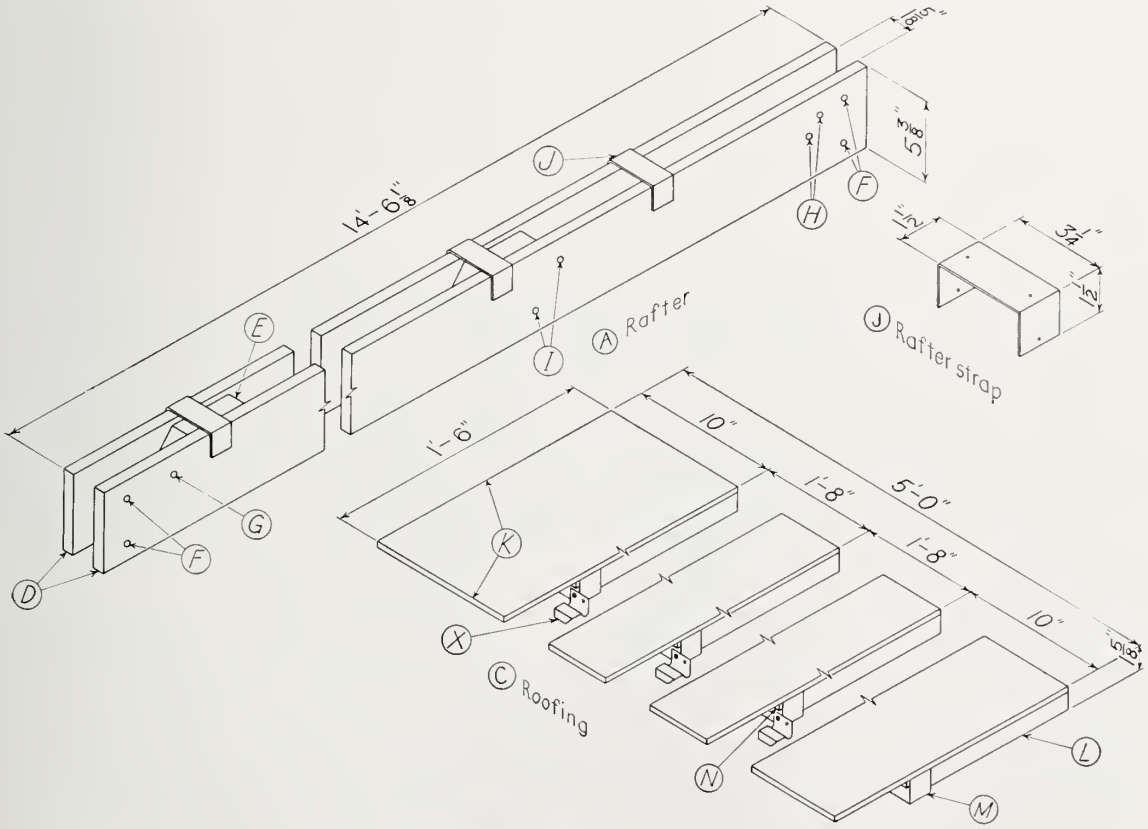

FIGURE 32.—*Details of roof DN.*

A, rafter; *D*, boards; *E*, blocks; *F*, *G*, *H*, *I*, holes; *J*, rafter strap; *C*, roofing; *K*, outside face; *L*, inside face; *M*, clip rail; *N*, rubber strip; *X*, siding clip.

(nominal 2 by 2 in), 5 ft 0 in. long, along the lower edge of the insulating board was fastened to the plywood by glue and by 4d galvanized roofing nails, spaced about 7½ in. and extended through the plywood into the clip rail. A sponge-rubber strip, *N*, ¼ in. thick and ⅜ in. wide, was fastened to the lower surface of the clip rail by glue and by ⅝-in. basket nails, spaced about 7½ in. This strip was for closing any air gap between overlapping pieces of roofing.

The outside surface of the roofing was covered with one coat of white exterior primer and one coat of green roof paint, applied with a brush.

There were three spring-steel siding clips, *X*, on each roofing piece along the lower edge of the clip rail. The clips were centered 10 in., 30 in., and 50 in. from the end of the clip rail and were each fastened by two ¾-in. round-head wood screws.

The roofing was attached to the rafters by the siding clips, which extended over the rafter straps.

(*b*) *Comments*

The roofs are assembled on the building site from standardized prefabricated parts which are demountable. The roof has a pitch of 37° and the rafter spacing is 20 in. The width of the roof is any multiple of this spacing.

The roofing is available in lengths which are multiples of 20 in. up to 80 in.

2. Transverse Load

The results for the transverse loads on roof specimens *DN–T1*, *T2*, and *T3* are given in table 12 and in figure 33.

The speed of the movable head of the testing machine was adjusted to 0.328 in./min.

Table 12.—*Structural properties of roofs DN and DO*

[Weight, based on face area; *DN*, 5.36 lb/ft²; *DO*, 5.97 lb/ft²]

Construction symbol	Transverse load; span, 14 ft 0 in.		Concentrated load; diam of steel disk, 1 in.	
	Specimen	Maximum load	Specimen	Maximum load
		lb/ft²		*lb*
DN	*T1*	73.7	*P1*	1,000
	T2	52.0	*P2*	837
	T3	52.0	*P3*	1,000
Average		59.2		946
DO	*T1*	147.1	*P1*	889
	T2	162.9	*P2*	924
	T3	135.7	*P3*	950
Average		148.6		921

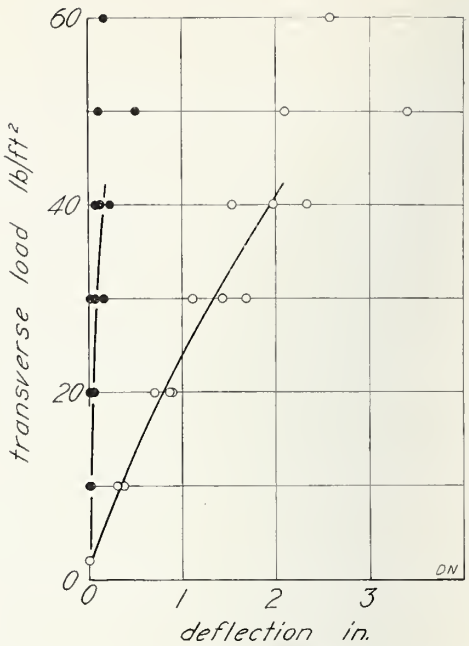

Figure 33.—*Transverse load on roof DN.*

Load-deflection (open circles) and load-set (solid circles) results for specimens *DN–T1*, *T2*, and *T3* on the span 12 ft 0 in.

In specimen *T1*, under a load of 31.7 lb/ft² the middle rafter cracked at a knot under a loading roller. Under a load of 38.0 lb/ft², one outer rafter cracked at a knot near midspan and ruptured under a load of 60.7 lb/ft². Under the maximum load, all the rafters ruptured.

In specimen *T2*, one outer rafter cracked at a knot near midspan under a load of 24.3 lb/ft² and ruptured under a load of 45.0 lb/ft². The middle rafter ruptured at midspan under a load of 48.6 lb/ft².

Under a load of 40.0 lb/ft² on specimen *T3*, one board in an outer rafter cracked at a knot near midspan and the other board ruptured at knots under the loading rollers. Under the maximum load, the middle rafter ruptured under both loading rollers.

3. Concentrated Load

The results of the concentrated loads on specimens *DN–P1*, *P2*, and *P3* are shown in table 12 and in figure 34.

The concentrated loads were applied to the roofing midway between two rafters and 10 in. from the exposed edge of the plywood. Under the maximum load on specimen *P2*, the disk punched through the plywood roofing. Under

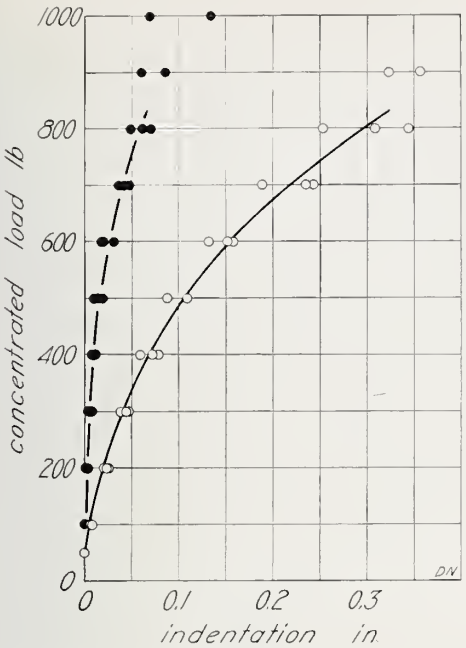

FIGURE 34.—*Concentrated load on roof DN.*

Load-indentation (open circles) and load-set (solid circles) results for specimens *DN–P1*, *P2*, and *P3*.

the maximum load on specimens *P1* and *P3*, the plywood cracked along the grain near the disk.

IX. ROOF *DO*

1. Sponsor's Statement

Roof *DO* was a prefabricated, demountable wood-frame construction having an upper face of plywood and insulating-board roofing. It was similar to roof *DN* except for rafter depth.

The price of this construction in Washington, D. C., as of July 1937 was \$0.39/ft^2.

(*a*) *Description*

The roof specimens were 14 ft 9⅜ in. long, 5 ft 0 in. wide, and 9⅜ in. deep. Each specimen consisted of a wood frame to which the upper face was attached.

Roof *DO* was like roof *DN* except that the frame was 7⅜ in. deep instead of 5⅜ in. The frame was three prefabricated wood rafters, attached at each end to a wood header by bolts.

Rafters.—The rafters were like rafters *A* in roof *DN* except that the boards were 7⅜ in. wide and the blocks were 11 in. long.

Headers.—The headers were like headers *B* in roof *DN* except that the boards were 7⅜ in. wide and the blocks were 7⅜ in. long.

In all other respects the roofs were similar.

(*b*) *Comments*

Roofs *DO* are similar to roofs *DN* having an 8-in. rafter to increase the transverse strength when required by the length of span.

2. Transverse Load

Roof specimen *DO–T2* under transverse load is shown in figure 35. The results for speci-

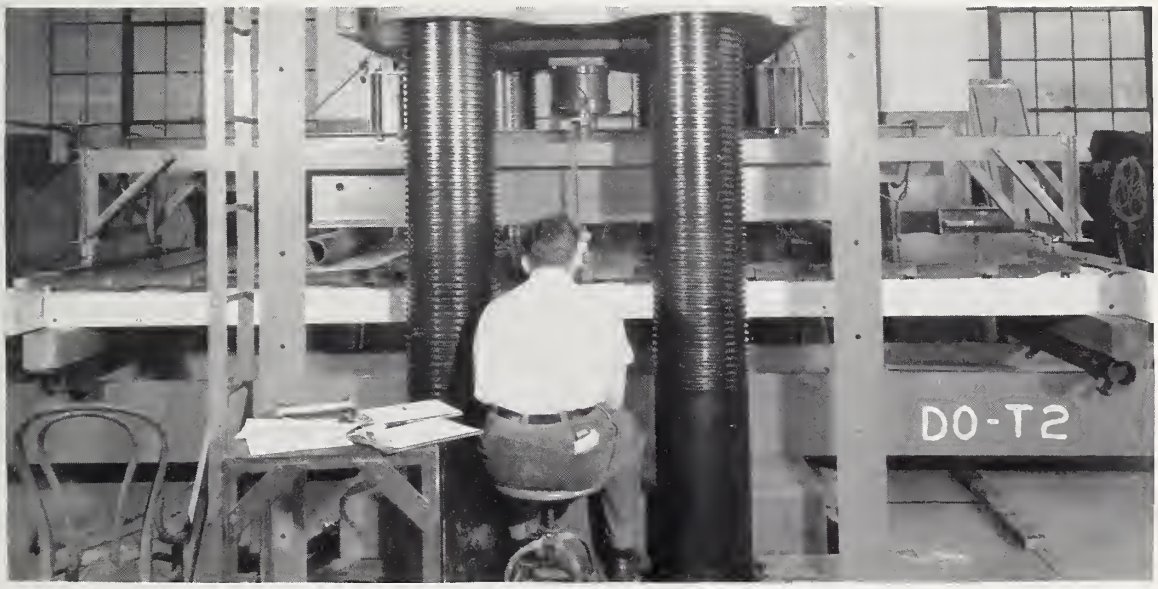

FIGURE 35.—*Roof specimen DO–T2 during the transverse test.*

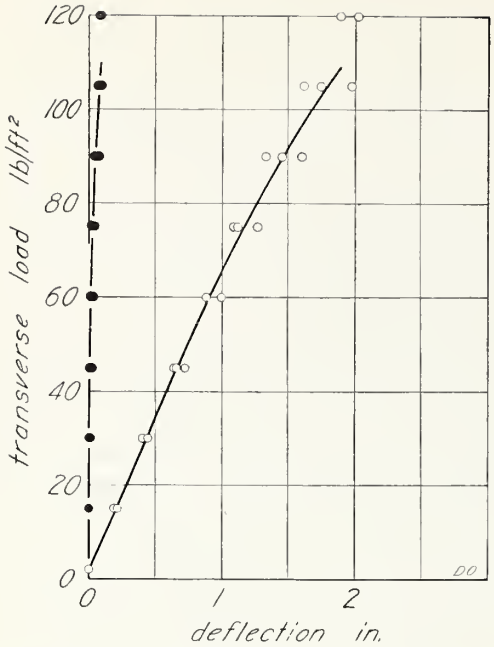

FIGURE 36.—*Transverse load on roof DO.*

Load-deflection (open circles) and load-set (solid circles) results for specimens *DO–T1*, *T2*, and *T3*.

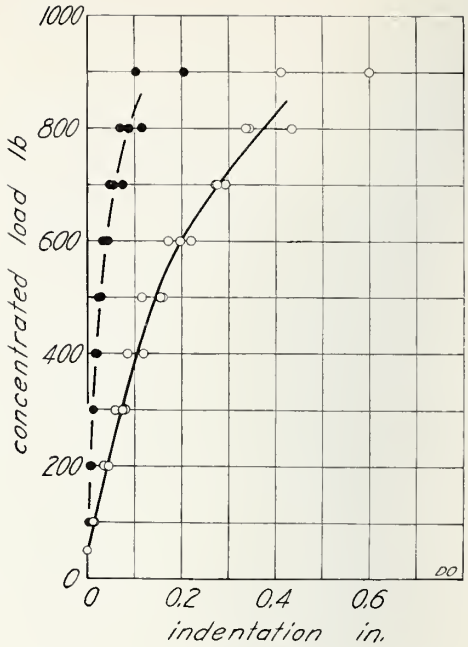

FIGURE 37.—*Concentrated load on roof DO.*

Load-indentation (open circles) and load-set (solid circles) results for specimens *DO–P1*, *P2*, and *P3*.

mens *DO–T1*, *T2*, and *T3* are given in table 12 and in figure 36.

The speed of the movable head of the testing machine was adjusted to 0.235 in./min.

One outer rafter in specimen *T1* cracked at a knot near midspan under a load of 71.4 lb/ft². Under a load of 120 lb/ft², the other outer rafter cracked at a knot near a loading roller. The middle rafter cracked under a load of 141 lb/ft². Under the maximum load, one outer rafter ruptured.

In specimen *T2* under a load of 67.1 lb/ft², cracks appeared at a knot near midspan in an outer rafter. Under a load of 117 lb/ft², a crack occurred at midspan in the middle rafter. Under the maximum load, all the rafters ruptured.

In specimen *T3* under a load of 68.0 lb/ft², a crack appeared at a knot in both the middle and one outer rafter. The other outer rafter cracked near midspan under a load of 103 lb/ft². Under the maximum load, each rafter ruptured.

3. Concentrated Load

The results of the concentrated loads on roof specimens *DO–P1*, *P2*, and *P3* are shown in table 12 and in figure 37.

The concentrated loads were applied to the roofing midway between two rafters and 10 in. from the exposed edge of the plywood. Under a load of 750 lb on specimen *P2*, the plywood cracked along the grain adjacent to the disk. Under the maximum load on each specimen, the disk punched through the plywood.

X. ADDITIONAL COMMENTS BY SPONSOR

"PHC" houses are assembled from prefabricated parts which are made in a specially equipped factory. A house is assembled in about one week. Many different arrangements of the rooms and architectural effects are possible.

Because the parts are readily demountable, a small house can easily be enlarged at any time by removing a portion of the building and assembling the desired extension from both old and new parts.

Horizontal dimensions of this construction are multiples of 20 in., and the ceiling height is 8 ft. Because there is no sheathing, diagonal braces between the studs are necessary.

Twelve experimental houses have been erected and dismantled in the southeastern part of New York State. The foundations were masonry,

usually concrete block, with a 2- by 8-in. wood sill anchored by ½-in. bolts. Partitions were similar to walls except that there were no stud rails and both faces were wallboard panels.

Ceiling panels were either plywood or insulating board.

Details of a two-story house assembly are shown in figure 38.

First floor joists rest on 1- by 6-in. blocks, 6 in. long, on the sill. Joists of other floors rest on studs of walls and partitions below. Tenons of studs in outside walls at right angles to joists are seated in mortises formed by joists and girts. Tenons of studs in load-bearing partitions are seated in mortises formed by butting joists. Attachments are a sheet-steel tension strap on each side of the joist fastened by a bolt and spring-steel washer. This type of fastening takes up the shrinkage in the wood parts.

Tenons of studs in partitions and outside outside walls parallel to joists are seated in

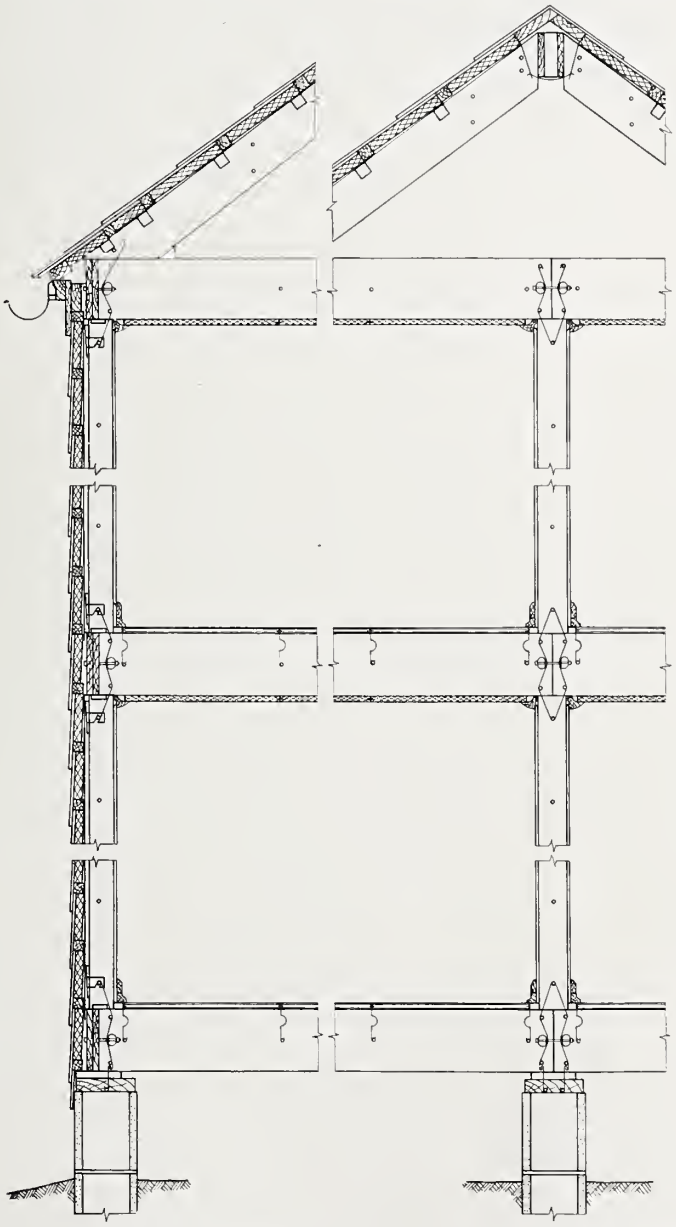

FIGURE 38.—*Typical details of a two-story house assembly*

mortises in the joists and are fastened by steel pins through the joist and tenon.

Lower ends of rafters rest on ceiling joists, the end block of the rafter butting the end block of the joist. Attachments are sheet-steel tension straps.

Upper ends of rafters are attached to ridge assembly. Splice blocks, notched into the ridge piece, extend between the boards of the rafters and are fastened by steel pins through the boards and the block. The ridge is covered by a roofing ridge piece attached by a spring-steel strap.

The physical properties of the insulating board were determined by C. G. Weber, of the Paper Section of this Bureau, under the supervision of B. W. Scribner.

The descriptions and drawings were prepared by E. J. Schell and G. W. Shaw, of the Building Practices and Specifications Section, under the supervision of V. B. Phelan.

The structural properties were determined by the Engineering Mechanics Section, under the supervision of H. L. Whittemore and M. F. Peck, with the assistance of the following members of the professional staff: E. S. Cohen, A. H. Easton, W. G. Hoback, J. S. Rimmer, L. R. Sweetman, and H. L. Weiss.

WASHINGTON, June 1, 1942.

BUILDING MATERIALS AND STRUCTURES REPORTS

[Continued from cover page II]

BMS33	Plastic Calking Materials	10¢
BMS34	Performance Test of Floor Coverings for Use in Low-Cost Housing: Part 1	10¢
BMS35	Stability of Sheathing Papers as Determined by Accelerated Aging	10¢
BMS36	Structural Properties of Wood-Frame Wall, Partition, Floor, and Roof Constructions with "Red Stripe" Lath Sponsored by the Weston Paper and Manufacturing Co	10¢
BMS37	Structural Properties of "Palisade Homes" Constructions for Walls, Partitions, and Floors Sponsored by Palisade Homes	10¢
BMS38	Structural Properties of Two "Dunstone" Wall Constructions Sponsored by the W. E. Dunn Manufacturing Co	10¢
BMS39	Structural Properties of a Wall Construction of "Pfeifer Units" Sponsored by the Wisconsin Units Co	10¢
BMS40	Structural Properties of a Wall Construction of "Knap Concrete Wall Units" Sponsored by Knap America Inc	10¢
BMS41	Effect of Heating and Cooling on the Permeability of Masonry Walls	10¢
BMS42	Structural Properties of Wood-Frame Wall and Partition Constructions with "Celotex" Insulating Boards Sponsored by the Celotex Corporation	15¢
BMS43	Performance Test of Floor Coverings for Use in Low-Cost Housing: Part 2	10¢
BMS44	Surface Treatment of Steel Prior to Painting	10¢
BMS45	Air Infiltration Through Windows	10¢
BMS46	Structural Properties of "Scot-Bilt" Prefabricated Sheet-Steel Constructions for Walls, Floors, and Roofs Sponsored by the Globe-Wernicke Co	10¢
BMS47	Structural Properties of Prefabricated Wood-Frame Constructions for Walls, Partitions, and Floors Sponsored by American Houses, Inc	10¢
BMS48	Structural Properties of "Precision-Built" Frame Wall and Partition Constructions Sponsored by the Homasote Co	10¢
BMS49	Metallic Roofing for Low-Cost House Construction	10¢
BMS50	Stability of Fiber Building Boards as Determined by Accelerated Aging	10¢
BMS51	Structural Properties of "Tilecrete Type A" Floor Construction Sponsored by the Tilecrete Co	10¢
BMS52	Effect of Ceiling Insulation upon Summer Comfort	10¢
BMS53	Structural Properties of a Masonry Wall Construction of "Munlock Dry Wall Brick" Sponsored by the Munlock Engineering Co	10¢
BMS54	Effect of Soot on the Rating of an Oil-Fired Heating Boiler	10¢
BMS55	Effects of Wetting and Drying on the Permeability of Masonry Walls	10¢
BMS56	A Survey of Humidities in Residences	10¢
BMS57	Roofing in the United States—Results of a Questionnaire	10¢
BMS58	Strength of Soft-Soldered Joints in Copper Tubing	10¢
BMS59	Properties of Adhesives for Floor Coverings	10¢
BMS60	Strength, Absorption, and Resistance to Laboratory Freezing and Thawing of Building Bricks Produced in the United States	15¢
BMS61	Structural Properties of Two Nonreinforced Monolithic Concrete Wall Constructions	10¢
BMS62	Structural Properties of a Precast Joist Concrete Floor Construction Sponsored by the Portland Cement Association	10¢
BMS63	Moisture Condensation in Building Walls	10¢
BMS64	Solar Heating of Various Surfaces	10¢
BMS65	Methods of Estimating Loads in Plumbing Systems	10¢
BMS66	Plumbing Manual	20¢
BMS67	Structural Properties of "Mu-Steel" Prefabricated Sheet-Steel Constructions for Walls, Partitions, Floors, and Roofs Sponsored by Herman A. Mugler	15¢
BMS68	Performance Test of Floor Coverings for Use in Low-Cost Housing: Part 3	15¢
BMS69	Stability of Fiber Sheathing Boards as Determined by Accelerated Aging	10¢
BMS70	Asphalt-Prepared Roll Roofings and Shingles	15¢
BMS71	Fire Tests of Wood- and Metal-Framed Partitions	20¢
BMS72	Structural Properties of "Precision-Built, Jr." Prefabricated Wood-Frame Wall Construction Sponsored by the Homasote Co	10¢
BMS73	Indentation Characteristics of Floor Coverings	10¢
BMS74	Structural and Heat-Transfer Properties of "U. S. S. Panelbilt" Prefabricated Sheet-Steel Constructions for Walls, Partitions, and Roofs Sponsored by the Tennessee Coal, Iron & Railroad Co	15¢
BMS75	Survey of Roofing Materials in the North Central States	15¢
BMS76	Effect of Outdoor Exposure on the Water Permeability of Masonry Walls	15¢
BMS77	Properties and Performance of Fiber Tile Boards	10¢
BMS78	Structural, Heat-Transfer, and Water-Permeability Properties of Five Earth-Wall Constructions	20¢
BMS79	Water-Distributing Systems for Buildings	15¢
BMS80	Performance Test of Floor Coverings for Use in Low-Cost Housing: Part 4	15¢
BMS81	Field Inspectors' Check List for Building Construction (cloth cover; size, 5 by 7½ inches)	20¢
BMS82	Water Permeability of Walls Built of Masonry Units	20¢
BMS83	Strength of Sleeve Joints in Copper Tubing Made with Various Lead-Base Solders	10¢
BMS84	Survey of Roofing Materials in the South Central States	15¢

[List continued on cover page IV]

BUILDING MATERIALS AND STRUCTURES REPORTS

[Continued from cover page III]