"Quality Pumps Since 1939"

Product information presented here reflects conditions at time of publication. Consult factory regarding discrepancies or inconsistencies.

ZOELLER PUMP CO.

MAIL TO: P.O. BOX 16347 • Louisville, KY 40256-0347
SHIP TO: 3649 Cane Run Road • Louisville, KY 40211-1961
(502) 778-2731 • 1 (800) 928-PUMP • FAX (502) 774-3624

SECTION: 3.20.190
FM1572
0908
Supersedes
0706

visit our web site:
www.zoeller.com

ZOELLER ONSITE WASTEWATER PRODUCTS

Zoeller Septic Tank Risers

Septic tank risers are an important part of any onsite treatment system. Risers allow access to septic or pump tanks in order to monitor system performance. Periodic maintenance costs are lowered due to accessibility to tanks. Many codes require risers on new installations. Zoeller Septic Tank Risers can be adapted to both new and existing installations. All materials are noncorrosive and environmentally safe.

12", 24" & 30" Diameter Riser Features:

- Height is easily adjustable in the field by cutting riser between any two ribs.
- Cover is UV stabilized fiberglass, watertight, green in color and has attractive texture to blend in with surroundings.
- All risers and covers are wheel load rated for 2500 pounds for added strength and durability.
- Riser is ribbed for extra strength.
- Fiberglass covers are fastened with tamper resistant screws (#3 Robertson) for added security.
- PVC riser, cover and stainless steel screws are all included for quick and easy ordering.

Lifetime Warranty - Every Zoeller riser is guaranteed to be free from defects in materials and workmanship for the lifetime of the homeowner/purchaser. Free repair or replacement, excluding labor, will be made on return of the riser prepaid to the factory. This warranty is limited to product proven to be free from abuse or improper installation.

CORRUGATED DUAL WALL 12" SEPTIC TANK RISER

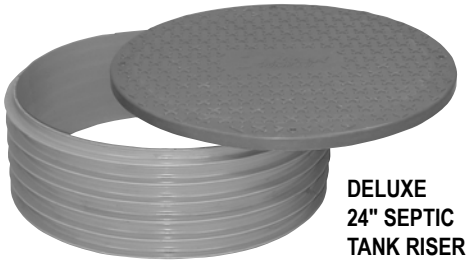

DELUXE 24" SEPTIC TANK RISER

DELUXE 30" SEPTIC TANK RISER

P/N 014514

12" SEPTIC TANK RISER		24" SEPTIC TANK RISER		30" SEPTIC TANK RISER	
Part Number	Riser Height	Part Number	Riser Height	Part Number	Riser Height
---	---	172-0018	8"	172-0028	8"
5083-0001	1'	172-0003	1'	172-0029	1'
---	---	172-0044	18"	172-0045	18"
5083-0003	2'	172-0004	2'	172-0030	2'
5083-0004	3'	172-0005	3'	172-0031	3'
5083-0009	4'	172-0006	4'	172-0032	4'
5083-0008	5'	172-0007	5'	172-0033	5'
---	---	172-0008	6'	172-0034	6'
---	---	172-0009	7'	172-0035	7'

© Copyright 2008 Zoeller Co. All rights reserved.

Mounting Options

BOLT-DOWN KIT

☐ P/N 172-0047 (24" dia. risers)
☐ P/N 172-0057 (12" and 30" dia. risers)
Bolt-down kit comes with hardware and sealant for securing riser to flat tank top where riser will cover tank opening.

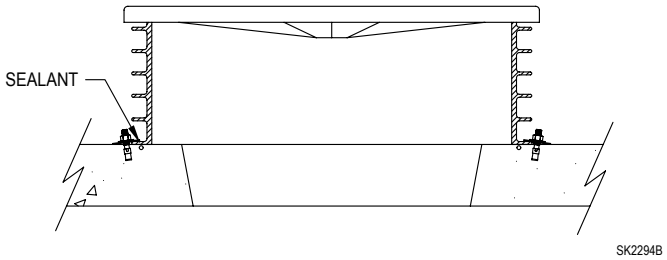

TRADITIONAL SEALANTS

☐ P/N 5080-0001 Butyl Rope Seal 5/16" x 20'
☐ P/N 5080-0002 Butyl Rope Seal 1" x 14' - 6"

SEAL RING

For mounting riser to oversized opening.
(Uses expanding foam sealant or bolt-down kit to secure)

☐ P/N 172-0048 34" outer diameter ring for 24" dia. risers.
☐ P/N 172-0049 36" outer diameter ring for 30" dia. risers.
☐ P/N 172-0052 Expanding foam sealant.
☐ P/N 172-0057 Seal ring bolt-down kit (see bolt-down kit).

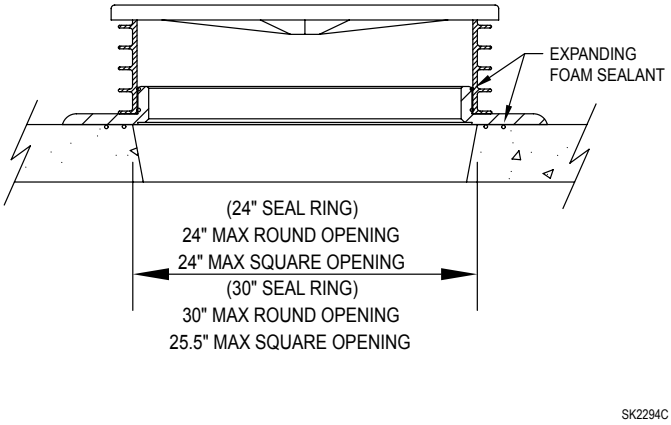

EPOXY MOUNTING

For mounting riser in a precast groove.

☐ P/N 172-0019 Quart Wgt. 1.0 lb.

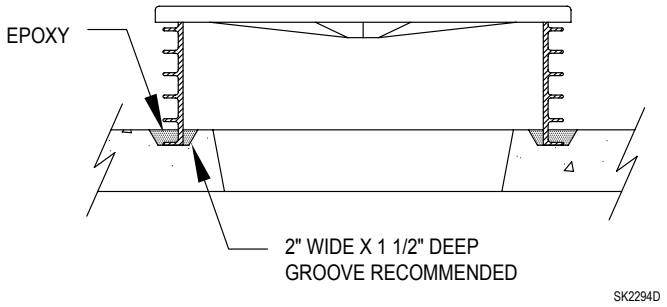

Accessories

LOCKABLE LATCH

☐ 172-0020* 24" Diameter Riser Wgt. 1.0 lb.
☐ 172-0056* 30" Diameter Riser Wgt. 1.0 lb.

*3/16" Shackled locks required (not Included).

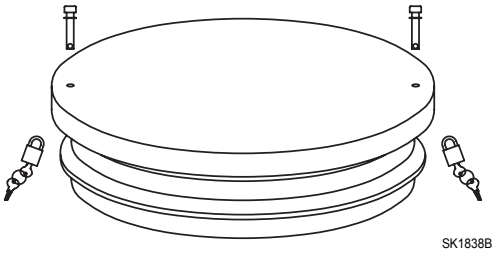

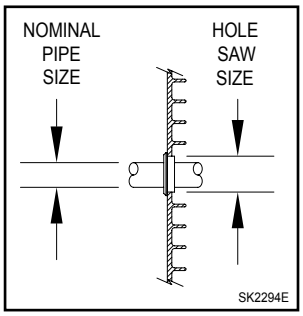

LID ONLY WITH SS SCREWS

☐ 5083-0006 Lid only 12" Wgt. 2 lbs.
☐ 17-0275 Lid only 24" Wgt. 16 lbs.
☐ 17-0342 Lid only 30" Wgt. 24 lbs.

PIPE SEALS

Part Number	Nominal Pipe Size	Hole Saw Dia.
5080-0003	⅜" IPS	1"
5080-0004	½" IPS	1¼"
5080-0005	¾" IPS	1¼"
5080-0006	1" IPS	1¾"
5080-0007	1¼" IPS	2"
5080-0008	1½" IPS	2½"
5080-0009	2" IPS	3"
5080-0010	3" IPS	4"
5080-0011	4" IPS	5"

ALL ZOELLER ONSITE WASTEWATER PRODUCTS MUST BE INSTALLED IN ACCORDANCE WITH LOCAL AND/OR STATE PLUMBING AND/OR HEALTH DEPARTMENT CODES.

© Copyright 2008 Zoeller Co. All rights reserved.