CSI

WATER TREATMENT SYSTEMS

User manual
Model: EVB-019-BLE

Main Menu

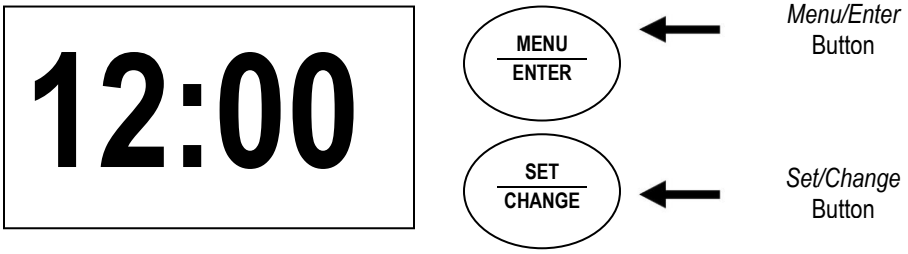

1. To enter Main Menu, press the ***Menu/Enter*** button.
   (Time of Day will flash)

2. To set the ***Time of Day***, press the ***Set/Change*** button.
   (First digit will flash) *Example [12:00]*
   - To change digit value, press the ***Set/Change*** button.
   - To accept the digit value, press the ***Menu/Enter*** button.
   - Next digit will flash to begin setting.
   - Once the last digit display is accepted, all digits will flash.

3. To set ***A.M. or P.M.***, press the ***Menu/Enter*** button.
   - To change digit value, press the ***Set/Change*** button. *Example [A]*
   - To accept the digit value, press the ***Menu/Enter*** button.
   - Once A.M. or P.M. is accepted, the next menu item will flash.

4. To set the ***Number of Days between Regeneration or Backwash Cycles (A)***, press the ***Set/Change*** button.
   - Repeat instructions from step (2). *Example [A - 07]*

   Notes: 1) Maximum value is 29.
   2) If value set to 0, Automatic Regeneration will never occur.
   3) Default setting is 4 days for softeners and 6 days for filters.
   4) On metered models, an "H" will appear to enter Compensated Hardness in grains per gallon (gpg). *Example [H – 20]*
   5) Default setting is 25 gpg.

5. To set the ***Number of Days between Air Draw Cycles (d)***, press the ***Set/Change*** Button
   - Repeat instructions from step (2) **"Used on Nitro & Nitro Pro Filters Only"** *Example [d – 01]*

   Notes: 1) Maximum value is 29.
   2) If value set to 0, air draw is turned off, but an air cycle will still be completed when backwash cycle occurs. If the *Number of Days between Air Draw Cycles* is set to a higher number of days than the *Number of Days between Backwash Cycles*, it will have no effect. In order to turn off all cycles, both the *Days between Backwash and Days between Air Draw Cycles* must be set to 0.
   3) Default setting is 1 day.

6. To Exit Main Menu, press the ***Menu/Enter*** button.
   Note: If no buttons are pressed for 60 seconds, the Main Menu will be exited automatically.

Normal Operation

1. ***Home Display***
   - Alternates between the display of *Time of Day* and *Number of Days until the Next Regeneration.*
   - *Days Remaining until the Next Regeneration* will count down from the entered Regeneration Day Override Value until it reaches 1 day remaining.
   - A Regeneration Cycle will then be initiated at the next designated regeneration time.
   - **Metered** models alternate the *Time of Day* and *Gallons left until the next Regeneration*. The meter will count down to zero (0000) and then regenerate at the scheduled time set.

2. ***Battery Back-Up*** (Uses a standard 9-volt alkaline battery.)
   - Installing the battery
   - Features of Battery Back-Up
     Maintains the *Time of Day* during power failures.

Notes:
1) During power failures, the display is turned off to conserve battery power. However, to confirm that the battery is working, press either button and the display will turn on for five (5) seconds.
2) If power failure occurs while system is regenerating, the Signature Series II will motor to a shut off position to prevent constant flow to drain. **Note:** Depending upon system pressure and other factors, it is possible to observe a reduced flow to drain during this step. After power is restored, the Signature Series II will return and finish the cycle where it left off prior to the power interruption.
3) When used without battery back-up, the unit acts like a standard valve. When a power failure occurs, the unit stops at its current point in the regeneration position and then restarts at that point when the power is restored. However, the time will be offset by the increment of time the unit was without power.

Electronic Connections

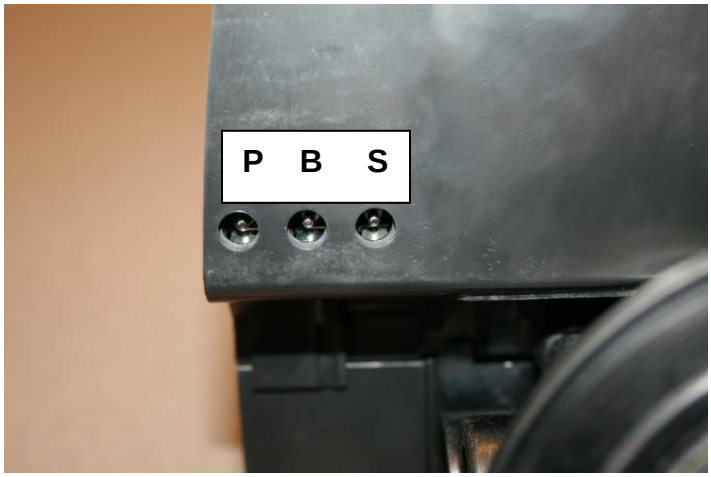

P = Power Supply

B = Powered in Backwash Cycle Only

S = Powered in Entire Regeneration Cycle

Starting Extra Regeneration Cycle

1. To Start ***Delayed Extra Cycle*** *Example [1]*
   - If *Days Remaining Until Next Regeneration* does not read '1', press and hold the ***Set/Change*** button for 3 seconds until the display reads '1', or '0000' on metered models.
   - Regeneration cycle will initiate at the next designated regeneration time.

2. To start ***Immediate Extra Cycle*** → First complete above step.
   - With *Days Remaining Until Next Regeneration* at '1' or '0000',
   - Press and hold the ***Set/Change*** button.
   - After 3 seconds, the regeneration cycle will begin.

3. To ***Fast Cycle*** thru regeneration → First complete above 2 steps.
   Note: *Fast Cycle* is not necessary unless desired to manually step through each cycle step.

   - Press and hold the ***Set/Change*** button for 3 seconds to advance to the next cycle step.

Softeners	Default (min.)
Step 1 : Backwash	10
Step 2 : Brine & Rinse	60
Step 3 : Rapid Rinse	10
Step 4 : Brine Refill	Set for full salting

Filters	Default (min.)
Step 1 : Backwash	10
Step 2 : Rest	5
Step 3 : Rapid Rinse	10
Step 4 : Not Used	0

Nitro	Default (min.)
Step 1 : Air Release	6
Step 2 : Backwash	10
Step 3 : Rest	5
Step 4 : Air Replenish	12
Step 5 : Rapid Rinse	10

Warning: *On* ***NITRO PRO*** *System, if "J" Program is used, the Oxyclean NP must be used to avoid any warranty issues.*

Nitro Pro	Default (min.)
Step 1 : Air Release	6
*Step 2 : Oxyclean NP Injection	15 sec.
Step 3 : Short Rinse	1
Step 4 : Rest	20
Step 5 : Backwash	10
Step 6 : Rest	5
Step 7 : Air Replenish	12
Step 8 : Rapid Rinse	10

Note: Depending upon system pressure and other factors, it is possible to observe flow to drain in the rest cycles.

*Only if "J" program (Oxyclean NP Option) is activated.

Nitro Only Backwash Cycle Step Explanation

Step 1: *Air Release* Step
For approximately 6 minutes
- Not programmable

Step 2: *Backwash* Step
- Default of 10 minutes

Step 3: *Rest* Step
- Default of 5 minutes

Step 4: Air Replenish Step
- Default of 12 minutes

Example:

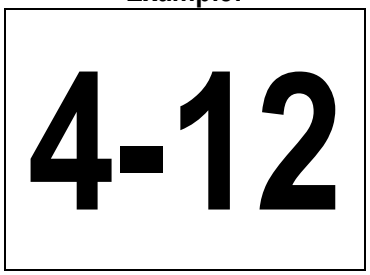

Step 5: Rapid Rinse Step
- Default of 10 minutes

Notes:

- When the valve is between positions, the display will flash the number of the step it is moving towards.

- The default time at which regeneration will occur is 2:00 a.m. for softeners and 12:00 a.m. for filters.

New feature: The motor's run direction during a particular regeneration cycle step is indicated by the rotation direction of the last 2 digit displays.

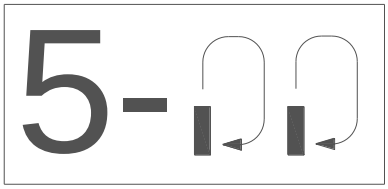

Nitro Pro Only Backwash Cycle Step Explanations (With "J" Program Activated – Oxyclean NP Option)

Step 1: *Air Release* Step
For approximately 6 minutes
- Not programmable

Step 2: *Oxyclean NP Injection*
For 15 seconds
- Not programmable

Step 3: *Short Rinse* Step
For 1 minute
- Not programmable

Step 4: *Rest* Step
For 20 minutes
- Not programmable

Step 5: *Backwash* Step
- Default of 10 minutes

Step 6: *Rest* Step
- Default of 5 minutes

Example:

6-05

Step 7: *Air Replenish* Step
- Default of 12 minutes

Step 8: *Rapid Rinse* Step
- Default of 10 minutes

Note: Depending upon system pressure and other factors, it is possible to observe flow to drain in the rest cycles.

Notes:
- When the valve is between positions, the display will flash the number of the step it is moving towards.

- The default time at which regeneration will occur is 2:00 a.m. for softeners and 12:00 a.m. for filters.

New feature: The motor's run direction during a particular regeneration cycle step is indicated by the rotation direction of the last 2 digit displays.

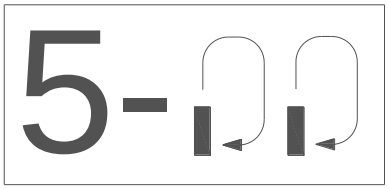

Final Set-Up

With proper valve operation verified (Softeners only):

1. Add water to the top of the air check. Manually step the valve to the Brine Cycle (position 2) and allow the valve to draw water from the brine tank until it stops. *Note:* The air check will check at approximately the midpoint of the screened intake area.

2. Next, manually step the valve to the Brine Refill position and allow the valve to return to Service automatically.

3. With the valve in Service, check that there is about 3 to 5 inches of water level above the grid in the brine tank, if used.

4. Fill the brine tank with salt to complete set-up. The control will run automatically.

Error Codes

There are four (4) error codes which could indicate a possible problem with the control valve:

Error 2 - Homing slot expected. Valve will begin searching for home.
(Normal operation continues.)

Error 3 - Encoder is not sending a signal.
(Valve requires service to continue.)

Error 4 - Unable to find homing slot.
(Valve requires service to continue.)

Error 5 - Motor overload (stalled position or shorted motor).
(Valve requires service to continue.)

Error 5 Explanation: The unit thinks the motor is locked. This can only happen when the valve is running the motor, it is not seeing any encoder slots, and the motor is overloaded. This usually alerts the presence of foreign debris inside the valve clogging the system.

Master Programming Mode

To enter Master Programming Mode, press and hold both buttons for 5 seconds.

Note: All Master Programming functions have been preset at the factory. Unless a change is desired, it is ***NOT*** necessary to enter Master Programming Mode.

1. **Regeneration Type** (t) **N/A for Nitro / Nitro Pro**
   - This display is used to set the Regeneration Type. This option setting is identified by the letter "t" in the left digit. There are two possible settings:

   - **Timeclock / Filter Delayed** – The control will determine that regeneration is required when the set regeneration time has been reached. The regeneration frequency setting will determine which days a regeneration cycle will be initiated. Example (t - - c).

   - **Meter Delayed (Demand)** – The control will determine that regeneration is required when the available volume of softened water drops to or below zero. Regeneration is to begin at the scheduled time set. Example (t - - d).
     - The ***Set/Change*** button will adjust this value. To accept the digit value, press the ***Menu/Enter*** button.

2. **Regeneration Day Override (A) –** Meter (Demand) Mode Only – **Softeners Only**
   - Press ***Menu/Enter*** button. This display is used to set the maximum amount of time (in days) the unit can be in service without regeneration. This option setting is identified by the letter "A" in the left digit. Regeneration will begin at the scheduled time. A setting of zero will cancel this feature.

   - Example: Override every 7 days (A-07), default setting, or cancel setting (A-00). Maximum is 29.

3. To Set **Regeneration Time (r)** *Example [r 12A]*
   - The time of day at which regeneration may take place is designated by the letter "r".
   - The first display digit indicates A.M. or P.M. To change the value, press the ***Set/Change*** button.
   - Press ***Menu/Enter*** button to accept the value and move to the next digit.
   - The second and third display digits indicate the hour at which the regeneration will occur.
   - Change the digits with the *Set/Change* button and accept with the ***Menu/Enter*** button.
   - After the entire display flashes, press the *Menu/Enter* button to move to the next menu item.

4. To Activate Oxyclean NP Program ***(Nitro Pro Only)***
   - "J" program is selectable either off – 0 (default setting) or on – 1.
   - To activate the non-adjustable cycles for the Oxyclean NP, select J-1 with the ***Set/Change*** button and enter with the ***Menu/Enter*** button.

5. To Set **Regeneration Cycle Step Times *Softeners/Filters Only* (1) (2) (3) (4)** *Example [3 – 20]*
   - The next 4 displays set the duration of time in minutes for each backwash cycle step.
   - The step number which is currently modifiable is indicated on the far left of the display screen.
   - The number of minutes allotted for the selected backwash step is displayed on the far right.
   - Change the digit values using the ***Set/Change*** and ***Menu/Enter*** buttons as described above.

5. To Set **Backwash Cycle Step Times Nitro (2) (3) (4) (5) / Nitro Pro (5) (6) (7) (8)** *Example [3 – 20]*
   - The next 4 displays set the duration of time in minutes for each backwash cycle step.
   - The step number which is currently modifiable is indicated on the far left of the display screen.
   - The number of minutes allotted for the selected backwash step is displayed on the far right.
   - Change the digit values using the ***Set/Change*** and ***Menu/Enter*** buttons as described above.

   Note on Air Draw Cycle (4): *Nitro Filter Only (7) Nitro Pro Only*

   The longer the unit is set to remain in the Air Draw cycle (4), the more air is drawn into the system. A default setting of 12 minutes draws air down to the level of a normal media bed height and then returns the unit to the home display. If the system needs more air, increase the time setting for step (4) or decrease the number of days between air draw cycles. There is no way to view the number of days until the next air draw will take place.

5. **System Capacity in Grains (c)** – *Meter (Demand) Only*
   - Press the ***Menu/Enter*** button. This display is used to set the system capacity in grains and is used in conjunction with the hardness setting to calculate total gallons of treated water available between regenerations. This option is identified by the letter “c” in the left digit. The maximum value for this item is 399. Example: 32,000 grain capacity (c 032).

6. To Exit the Master Programming Mode, press the ***Menu/Enter*** button until time of day returns.

Note: If no buttons are pressed for 60 seconds, the Master Programming Mode will be exited automatically.

Master Programming Mode Flow Chart

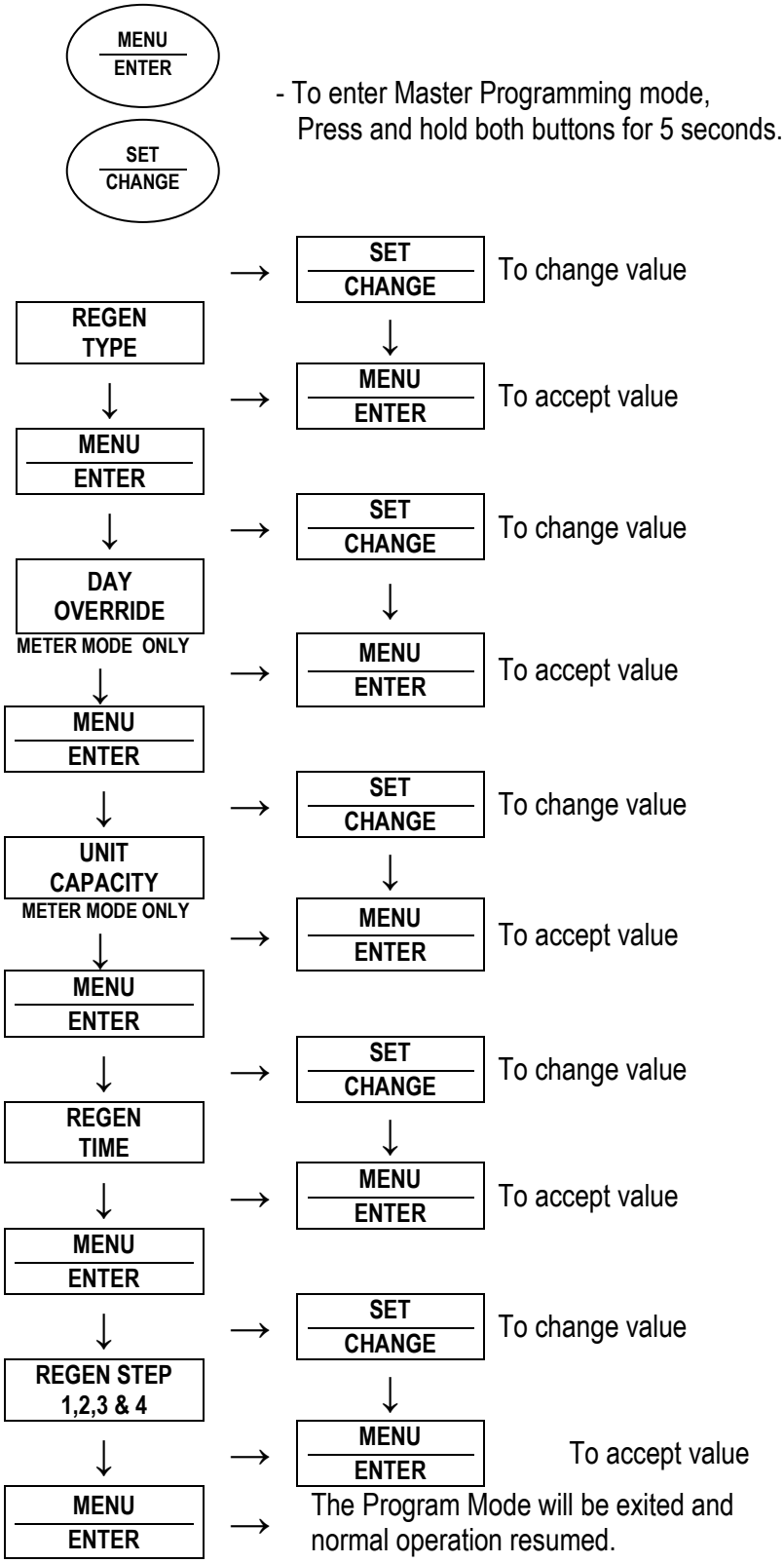

Control Valve Assembly (Nitro & Nitro Pro)

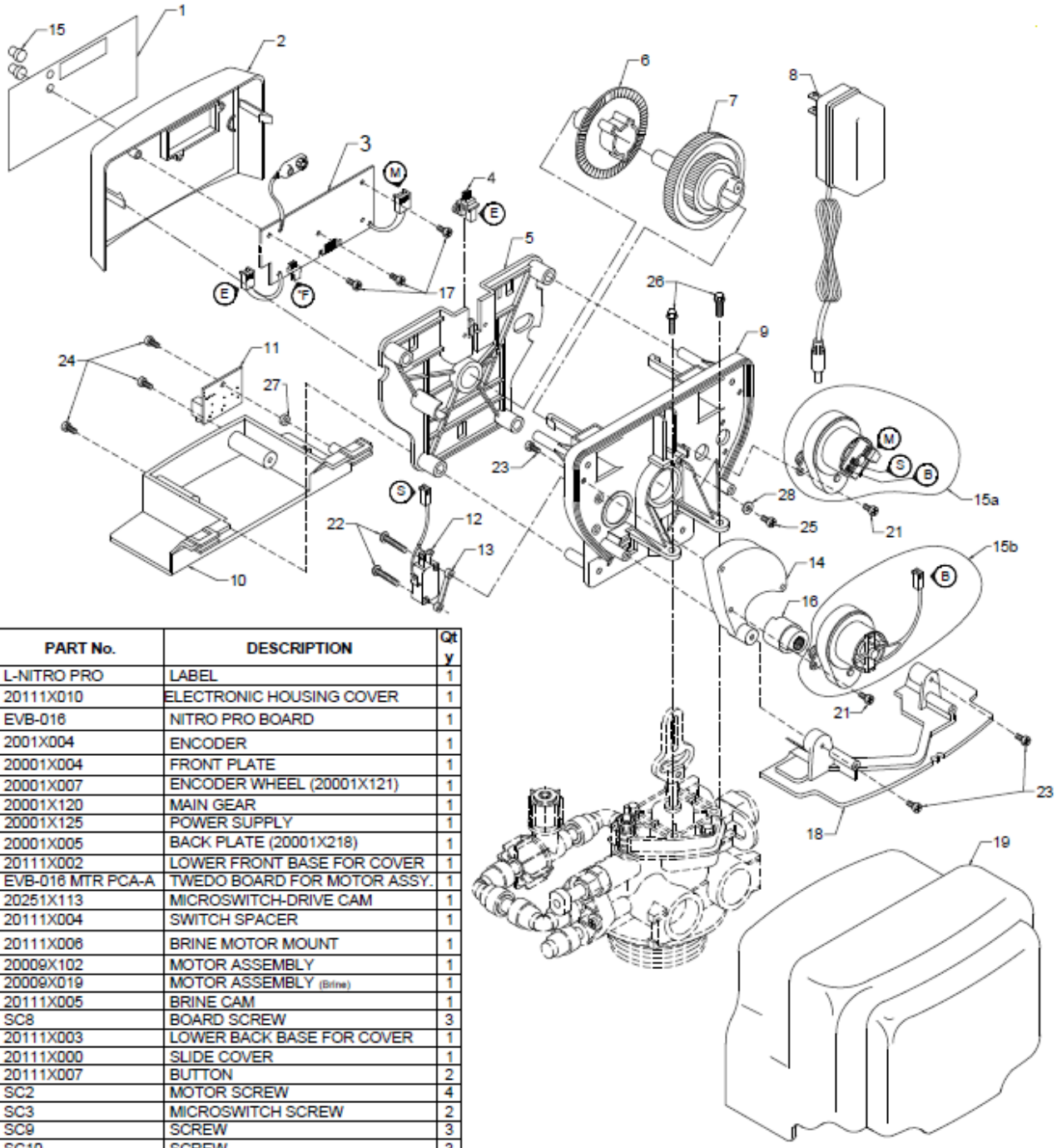

	PART No.	DESCRIPTION	Qty
1	L-NITRO PRO	LABEL	1
2	20111X010	ELECTRONIC HOUSING COVER	1
3	EVB-016	NITRO PRO BOARD	1
4	2001X004	ENCODER	1
5	20001X004	FRONT PLATE	1
6	20001X007	ENCODER WHEEL (20001X121)	1
7	20001X120	MAIN GEAR	1
8	20001X125	POWER SUPPLY	1
9	20001X005	BACK PLATE (20001X218)	1
10	20111X002	LOWER FRONT BASE FOR COVER	1
11	EVB-016 MTR PCA-A	TWEDO BOARD FOR MOTOR ASSY.	1
12	20251X113	MICROSWITCH-DRIVE CAM	1
13	20111X004	SWITCH SPACER	1
14	20111X006	BRINE MOTOR MOUNT	1
15a	20009X102	MOTOR ASSEMBLY	1
15b	20009X019	MOTOR ASSEMBLY (Brine)	1
16	20111X005	BRINE CAM	1
17	SC8	BOARD SCREW	3
18	20111X003	LOWER BACK BASE FOR COVER	1
19	20111X000	SLIDE COVER	1
20	20111X007	BUTTON	2
21	SC2	MOTOR SCREW	4
22	SC3	MICROSWITCH SCREW	2
23	SC9	SCREW	3
24	SC10	SCREW	3
25	20001X007	PISTON SCREW	1
26	20001X001	VALVE HEX SCREW	2
27	20111X014	CIRCUIT BOARD WASHER	1
28	20001X002	PISTON WASHER	1

LETTERS IN DIAGRAM REPRESENT WIRING CONNECTIONS

** "F" Port is for Flow meter connection (Flow meter not shown)*

NITRO & NITRO PRO BODY ASSEMBLY

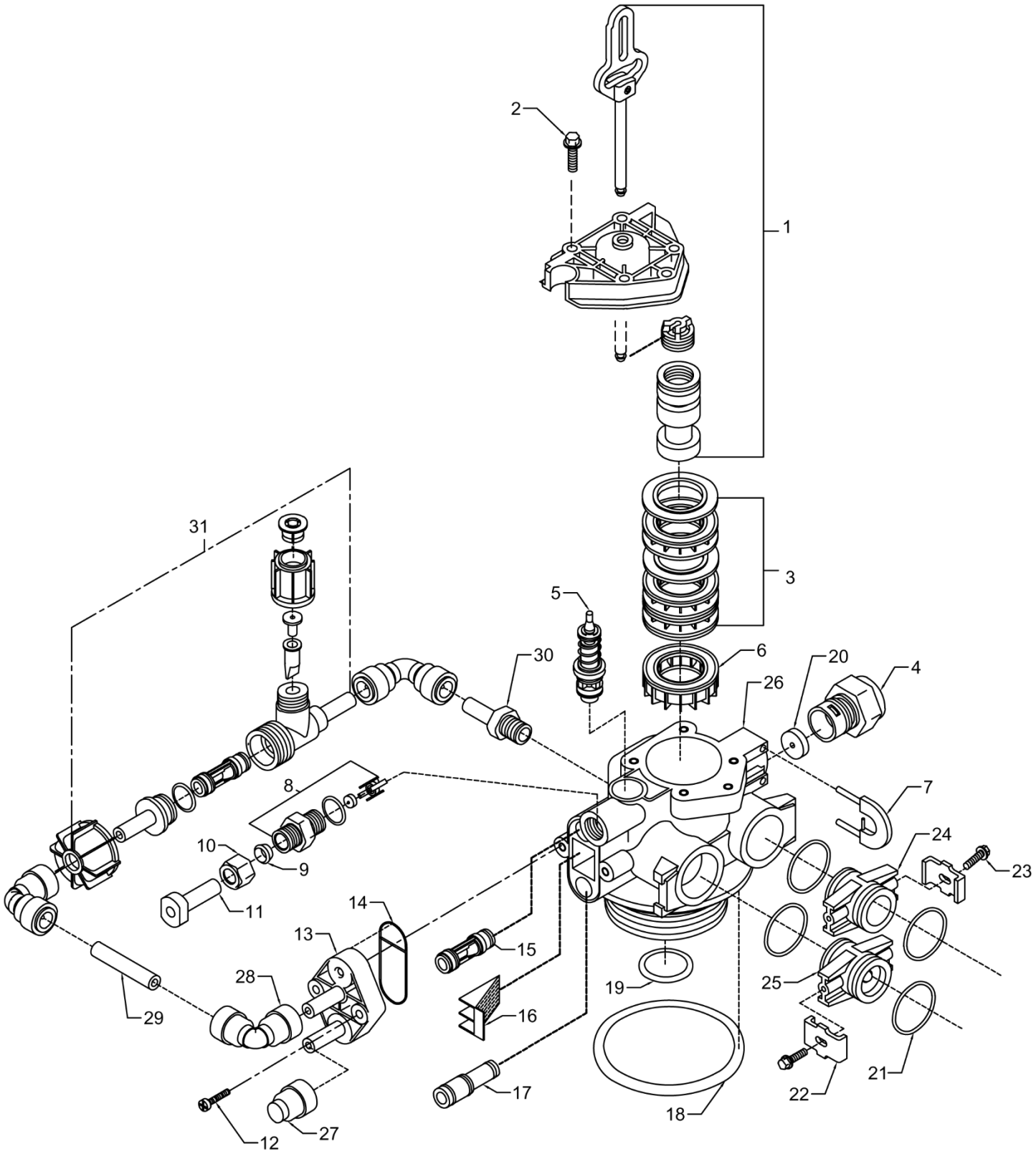

NITRO & NITRO PRO BODY ASSEMBLY

	PART No.	DESCRIPTION	Qty.
1	20009X231	PISTON ASSEMBLY	1
2	20001X226	HEX SCREW	3
3	20001X232	SEAL & SPACER KIT	1
4	20251X100	DRAIN LINE FLOW CONTROL HOUSING	1
5	20561X225	BRINE VALVE	1
6	N/A	END SPACER	1
7	20001X214	DRAIN RETAINER CLIP	1
8	20001X228	BRINE LINE FLOW CONTROL ASSY.	1
9	20251X305	BRINE LINE FERRULE	1
10	20251X304	BRINE LINE COMPRESSION NUT	1
11	20009X005	PLUG	1
12	20001X226	HEX SCREW	2
13	20009X001	INJECTOR COVER NITRO PRO	1
14	20001X224	INJECTOR SEAL	1
15	20001X219	INJECTOR ASSEMBLY WHITE (SPECIFY COLOR)	1
16	20001X222	INJECTOR SCREEN	1
17	20001X217	INJECTOR PLUG	1
18	20001X215	TANK O-RING	1
19	20561X204	DISTRIBUTOR PILOT O-RING	1
20	20251X272	DLFC 5.0 BUTTON (SPECIFY SIZE)	1
21	20561X216	ADAPTER O-RING	4
22	20561X201	CLIP	2
23	20561X217	HEX SCREW	2
24	20561X215	ADAPTER COUPLING	1
25	20111X011	ADAPTER COUPLING CHECKVALVE	1
26	N/A	VALVE BODY	1
27	20009X010	INJECTOR CAP PLUG	1
28	GA-T0620666B	3/8" 90 ELBOW	3
29	57005X001	3/8" BLACK TUBING / FT.	0.2
30	GA-S0660416B	STEM ADAPTER	1
31	20009X007	INJECTION ASSEMBLY	1

Control Valve Drive Assembly *(Filter Version)*

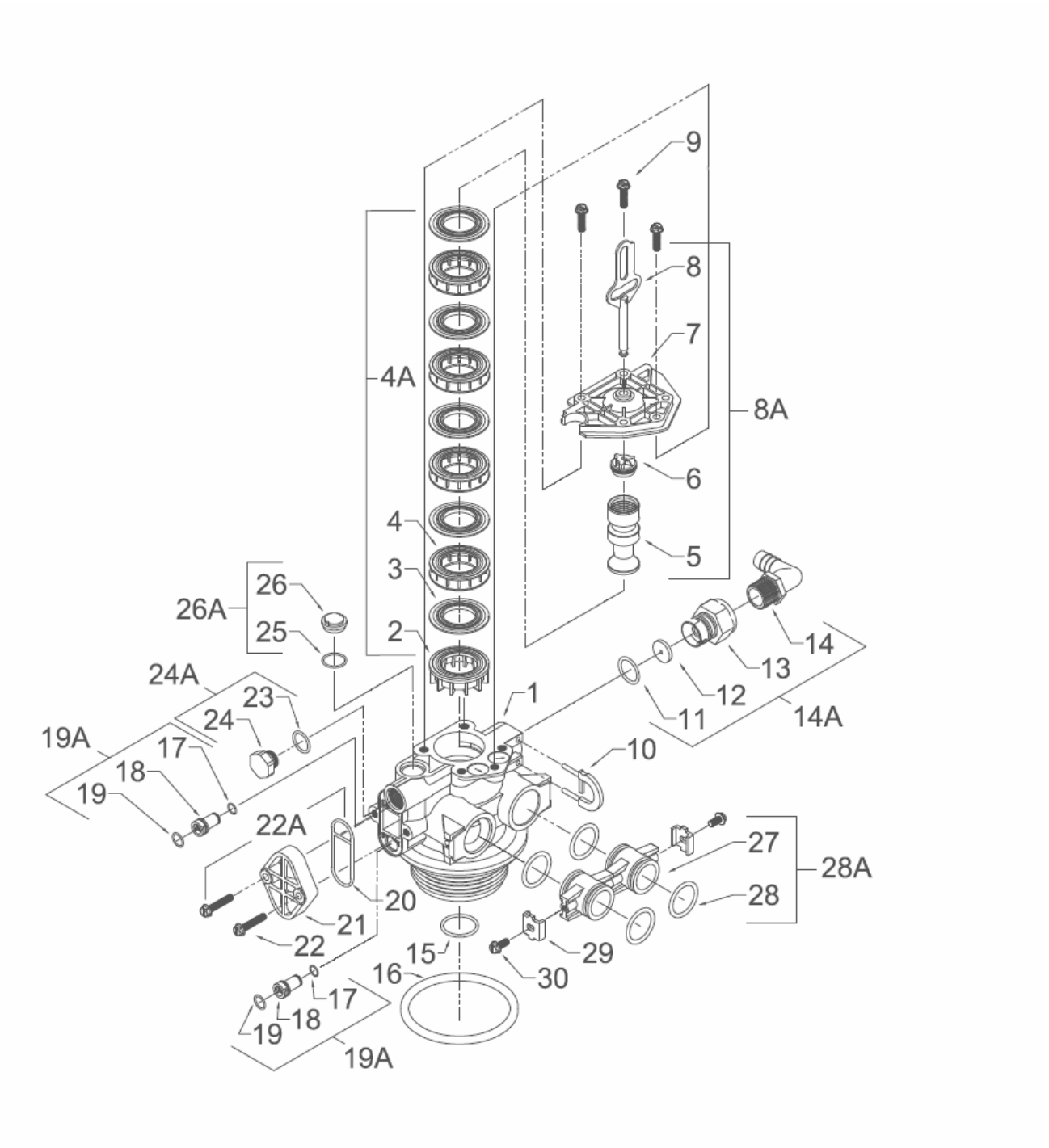

Control Valve Drive Assy. *(Filter Version)*

Ref #	Description	Part #	Qty.
0	Valve Body Complete	20001X200	1
1	Valve Body Only	20001X201	1
2	End Spacer	N/S	1
3	Seal	N/S	5
4	Spacer	N/S	4
4A	Seal & Spacer Kit Incl. (1) #2, (5) #3, & (4) #4	20001X232	1
5	Down Flow Piston	N/S	1
6	Piston End Rod Retainer	N/S	1
7	End Plug Assembly	N/S	1
8	Piston Arm	N/S	1
8A	Piston Assembly Incl. (1) each #5 thru #8	20001X231	1
9	Hex Washer HD 10-24 X 13/16" Screw	N/S	3
10	Drain Retainer	20001X214	1
11	O Ring	20251X254	1
12	Flow Control Button 1.5 GPM	20251X266	1
	Flow Control Button 2.0 GPM	20251X267	1
	Flow Control Button 2.4 GPM	20251X268	1
	Flow Control Button 3.0 GPM	20251X269	1
	Flow Control Button 3.5 GPM	20251X270	1
	Flow Control Button 4.0 GPM	20251X271	1
	Flow Control Button 5.0 GPM	20251X272	1
	Flow Control Button 7.0 GPM	20251X274	1
13	Plastic Flow Control Housing	N/S	1
14	Drain Line Fitting 90º Elbow 1/2" NPT x 1/2" Tubing	20251X255	1
14A	Flow Control Assembly-Specify GPM Incl. (1) each #11 thru #14		
	Flow Control Assy. 1.5 GPM-PVC	20251X256	1
	Flow Control Assy. 2.0 GPM-PVC	20251X257	1
	Flow Control Assy. 2.4 GPM-PVC	20251X258	1
	Flow Control Assy. 3.0 GPM-PVC	20251X259	1
	Flow Control Assy. 3.5 GPM-PVC	20251X260	1
	Flow Control Assy. 4.0 GPM-PVC	20251X261	1
	Flow Control Assy. 5.0 GPM-PVC	20251X262	1
	Flow Control Assy. 7.0 GPM-PVC	20251X264	1

Ref #	Description	Part #	Qty.
15	O Ring	20561X204	1
16	O Ring	2000X215	1
17	O Ring	N/S	1
18	Injector	N/S	1
19	O Ring	N/S	2
19A	Injector Plug & O Ring Assembly Incl. (1) each #17 thru #19	20001X217	1
20	Injector Seal	20001X224	1
21	Injector Cap	20001X223	1
22	10-24 X 1 Hex Washer HD Screw	20001X226	2
22A	Filter Conversion Kit Incl. (1) each #19A, #24A, #26A, #20, #21 & (2) #22	20001X221	1
23	O Ring	N/S	1
24	Filter Plug	N/S	1
24A	O Ring & Filter Plug Assembly Incl. (1) each #23 thru #24	20001X229	1
25	O Ring	N/S	1
26	Brine Valve Cap	N/S	1
26A	O Ring & Brine Valve Cap Assembly	20001X230	1
	Items #27 thru #30 used only with clock regeneration		
27	Adapter Coupling	N/S	2
28	O Ring	20561X216	4
28A	Adapter Coupling & O Ring Assembly Incl. (1) # 27 & (2) #28	20561X215	1
29	Mounting Clip	20561X201	2
30	8-18 X 5/8" Hex Washer HD Screw	20561X217	2

N/S indicates non-stocked item
Shaded Ref # indicates assembly or kit

Control Valve Assembly *(Softener Version)*

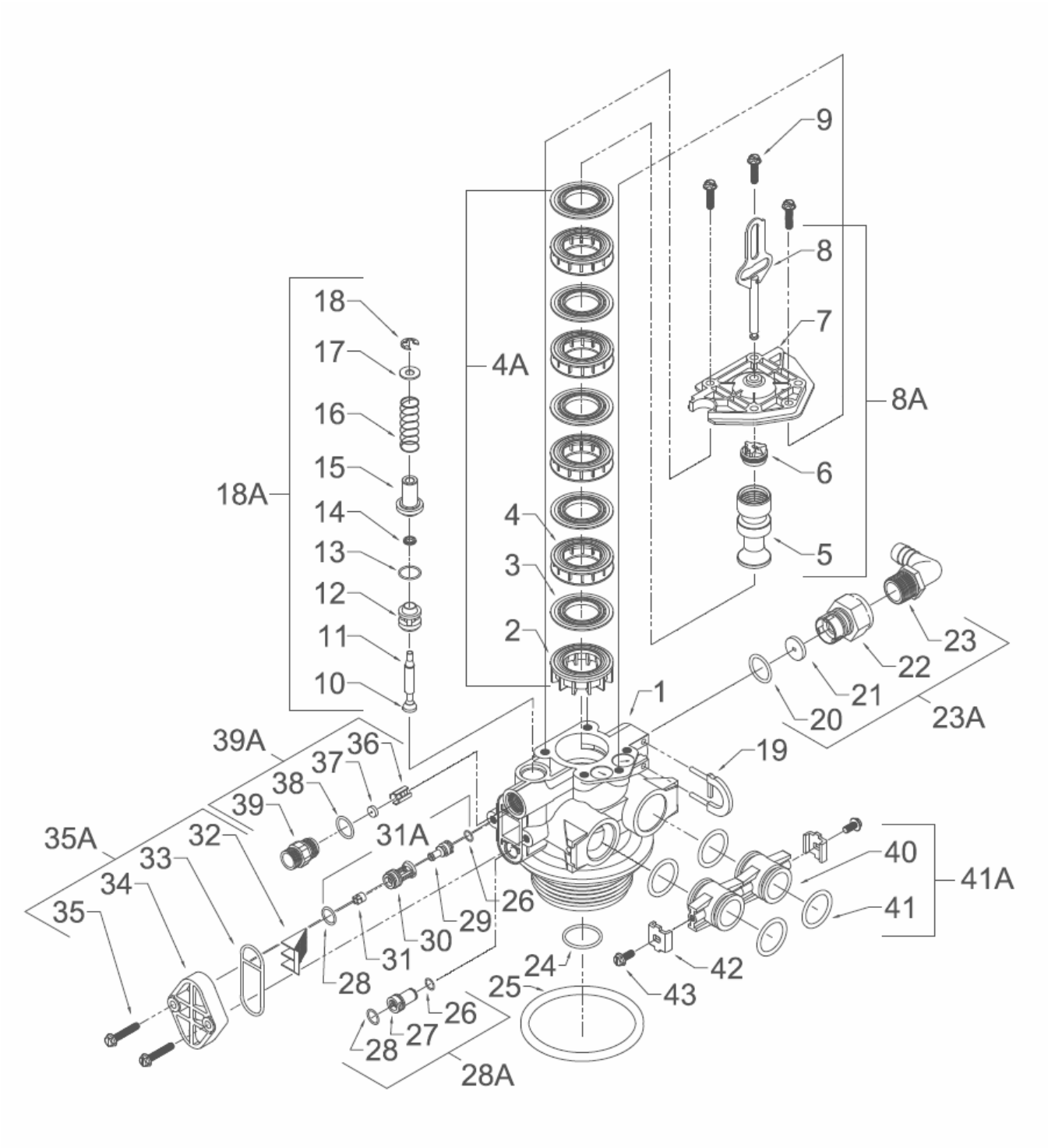

Control Valve Drive Assembly Parts List *(Softener Version)*

Ref #	Description	Part #	Qty.
0	Valve Body Complete	20001X200	1
1	Valve Body Only	20001X201	1
2	End Spacer	N/S	1
3	Seal	N/S	5
4	Spacer	N/S	4
4A	Seal & Spacer Kit Incl. (1) #2, (5) #3 & (4) #4	20001X232	1
5	Down Flow Piston	N/S	1
6	Piston End Rod Retainer	N/S	1
7	End Plug Assembly	N/S	1
8	Piston Arm	N/S	1
8A	Piston Assembly Incl. (1) each #5, #6, #7 & #8	20001X231	1
9	Hex Washer HD 10-24 X 13/16" Screw	N/S	3
10	Brine Valve Set	N/S	1
11	Brine Valve Stem	N/S	1
12	Brine Valve Spacer	N/S	1
13	O Ring	N/S	1
14	Quad Ring	N/S	1
15	Brine Valve Cap	N/S	1
16	Brine Valve Spring	N/S	1
17	Plain Nylon Washer	N/S	1
18	Retaining Ring	N/S	1
18A	Brine Assembly Incl. (1) each #10 thru #18	20001X210	1
19	Drain Retainer	20001X214	1
20	O Ring	20251X254	
21	Flow Control Button 1.5 GPM	20251X266	1
	Flow Control Button 2.0 GPM	20251X267	1
	Flow Control Button 2.4 GPM	20251X268	1
	Flow Control Button 3.0 GPM	20251X269	1
	Flow Control Button 3.5 GPM	20251X270	1
	Flow Control Button 4.0 GPM	20251X271	1
	Flow Control Button 5.0 GPM	20251X272	1
	Flow Control Button 7.0 GPM	20251X274	1
22	Plastic Flow Control Housing	N/S	1
23	Drain Line Fitting 90º Elbow 1/2" NPT X 1/2" Tubing	20251X255	1
23A	Flow Control Housing – Specify GPM Incl. (1) each #20 thru #23		
	Flow Control Assy. 1.5 GPM-PVC	20251X256	1
	Flow Control Assy. 2.0 GPM-PVC	20251X257	1
	Flow Control Assy. 2.4 GPM-PVC	20251X258	1
	Flow Control Assy. 3.0 GPM-PVC	20251X259	1
	Flow Control Assy. 3.5 GPM-PVC	20251X260	1
	Flow Control Assy. 5.0 GPM-PVC	20251X262	1
	Flow Control Assy. 7.0 GPM-PVC	20251X264	1

Ref #	Description	Part #	Qty.
24	O Ring	20561X204	1
25	O Ring	20001X215	1
26	O Ring	N/S	2
27	Injector Plug	N/S	1
28	O Ring	N/S	1
28A	Injector Plug & O Ring Assy. Incl. (1) each #26 thru # 28	20001X217	1
29	Injector Throat	N/S	1
30	Injector Nozzle	N/S	1
31	Vortex Generator	N/S	1
31A	Injector Assy. Specify Size Incl. (1) each #2 & #28 thru #31	20001X219	1
32	Injector Screen	20001X222	1
33	Injector Seal	20001X224	1
34	Injector Cap	20001X223	1
35	10-24 1 Hex Washer HD Screw	20001X226	2
35A	Injector Kit – Specify Size – Incl. (1) ea #31A, #32, #33, #34 & (2) #35	20001X220	1
36	BLFC Button Retainer	20561X240	1
37	5 GPM BLFC Button	20251X318	1
38	O Ring	20561X239	1
39	BLFC Adapter	20561X241	1
39A	BLFC Assembly .5 GPM - Inc. (1) each #36 thru #39	20001X228	1

Items #40 thru #43 used ONLY with clock regeneration			
40	Adapter Coupling	N/S	2
41	O Ring	20561X216	4
41A	Adapter Coupling & O Ring Assy. Incl. (1) #40 & (2) # 41	20561X215	1
42	Mounting Clip	20561X201	2
43	8-18 X 5/8" Hex Washer HD Screw	20561X217	2

N/S indicates non-stocked item
shaded Ref # indicates assembly
or kit

Meter Assembly

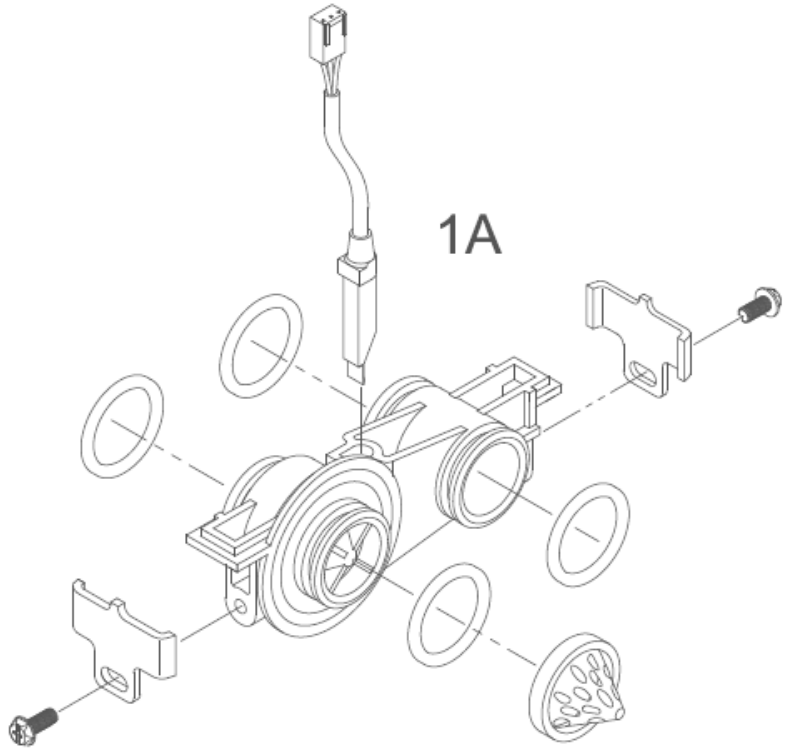

Meter Assembly Parts List

Ref #	Description	Part #	Qty.
1A	Meter Assembly, Turbine Complete	20564X200	1

Bypass Assembly *(Plastic)*

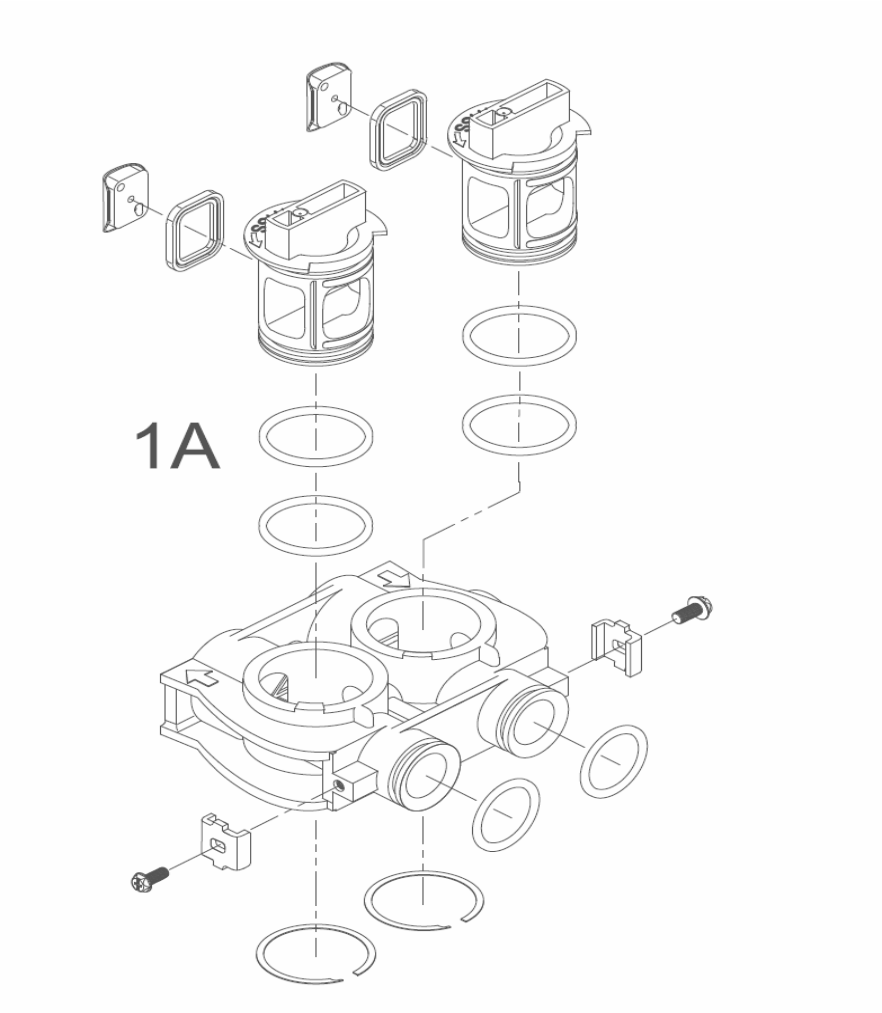

Ref #	Description	Part #	Qty.
1	Plastic Bypass Valve Assembly	20561X292	1

Bypass Assembly
(Stainless Steel)

Ref #	Description	Part #	Qty.
1	Bypass Valve 3/4" Stainless Steel	20561X270	1
	Bypass Valve 1" Stainless Steel	20561X283	1

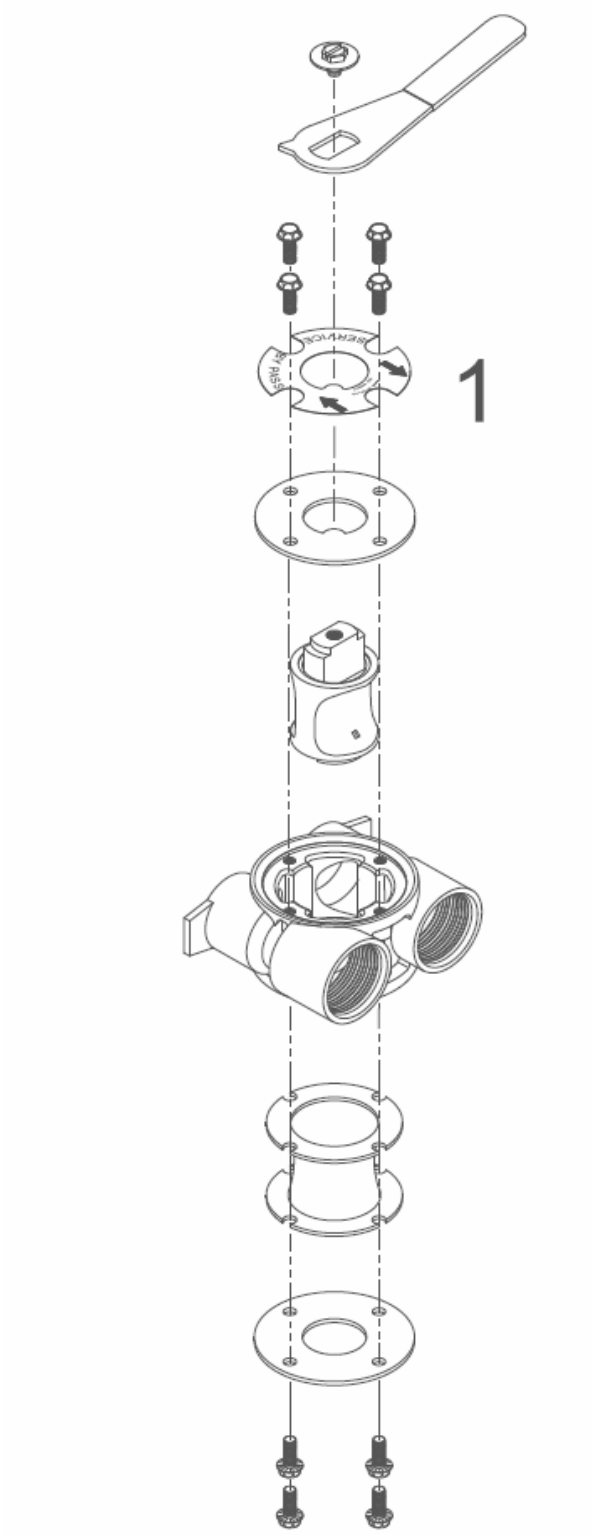

Service Instructions

A. General Preliminary Instructions – PERFORM BEFORE ALL SERVICING OPERATIONS!

1. Turn off water supply to conditioner.
   - If the conditioner installation has a "three valve" bypass system, first open the valve in the bypass line, then close the valves at the conditioner inlet and outlet.
   - If the conditioner has an integral bypass valve, put it in the bypass position.
   - If there is only a shut off valve near the conditioner inlet, close it.
2. Relieve water pressure in the conditioner by stepping the control into the backwash position momentarily. Return the control to the service position.
3. Unplug electrical cord from outlet.
4. Disconnect brine tube and drain line connections at the injector body.

B. To Replace Brine Valve (need first A1-A3)

1. Remove the control valve back cover. Disconnect the meter signal wire from the meter.
2. Remove screw and washer at drive yoke. Remove powerhead mounting screws. The entire powerhead assembly will now lift off easily.
3. Remove piston retaining plate screws and pull upward on end of piston yoke until assembly is out of valve.
4. Pull brine valve from injector body, also remove and discard O ring at bottom of brine valve hole.
5. Apply silicone lubricant to O ring and reinstall at bottom of brine valve hole.
6. Apply silicone lubricant to O ring on new brine valve assembly and press into brine valve hole, shoulder on bushing should be flush with injector body.
7. Insert screws through injector cap and into mating holes in the valve body. Tighten screws.
8. Reconnect brine tube and drain line.
9. Return bypass or inlet valving to normal service position. Water pressure should now be applied to the conditioner, and any bypass line shut off.
10. Check for leaks at all seal areas. Check drain seal with the control in the backwash position.
11. Plug electrical cord into outlet.
12. Set time of day and cycle control valve manually to assure proper function. Make sure control valve is returned to the service position.
13. Make sure there is enough salt in the brine tank.
14. Start regeneration cycle manually if water is hard.

C. To Replace Injectors & Screen (need first A1 & A3)

1. Remove injector cap screws, remove cap and discard gasket. Remove vortex generator from end of the injector assembly.
2. Remove injector assembly. Apply silicone lubricant to new injector assembly O rings and install. Be sure to push injector assembly tightly so O rings are seated. Replace vortex generator. Install a new screen.
3. Apply silicone lubricant to new gasket and install around oval extension on injector cap.
4. Repeat B7-B14.

D. To Replace Powerhead

1. Remove the control valve back cover. Remove the three screws along the outer edge of the back plate and remove the front cover. Disconnect the power supply and the circuit board signal wire from the motor and feed them back through the control. Disconnect the optical sensor signal wire. Disconnect the meter signal wire from circuit board and feed back through the control.
2. Remove screw and washer at drive yoke. Remove powerhead mounting screws. The entire powerhead assembly will now lift off easily.
3. Put new powerhead on top of the valve. Be sure the drive pin on main gear engages slot in drive yoke (wide side of drive yoke upright must face to the left away from the motor).
4. Replace powerhead mounting screws. Replace screw and washer at drive yoke.
5. Reconnect meter signal, optical sensor, power supply, and circuit board signal wires.
6. Reinstall front cover and back cover.

E. <u>To Replace Piston Assembly</u>

1. Follow steps A.1 through A.3.
2. Remove control valve back cover. Disconnect the meter signal wire from the meter.
3. Remove screw and washer at drive yoke. Remove powerhead mounting screws. The entire powerhead assembly will now lift off easily.
4. Remove piston retaining plate screws.
5. Pull upward on end of piston yoke until assembly is out of valve.
6. Inspect the inside of the valve to make sure that all spacers and seals are in place, and that there is no foreign matter that would interfere with the valve operation.
7. Take new piston assembly as furnished and push piston into valve by means of the end plug. Twist drive yoke carefully in a clockwise direction to properly align it with drive gear. Reinstall piston retaining plate screws.
8. Place powerhead on top of valve. Be sure drive pin on main gear engages slot in drive yoke (wide side of drive yoke upright must face to the left away from the motor).
9. Replace powerhead mounting screws. Replace screw and washer at drive yoke.
10. Reconnect brine tube and drain line.
11. Return bypass or inlet valving to normal service position. Water pressure should now be applied to the conditioner, and any bypass line shut off.
12. Replace the control valve back cover.
13. Follow steps A.9 through A.13.

F. <u>To Replace Seals and Spacers</u>

1. Follow steps A.1 through A.3.
2. Remove the control valve back cover. Disconnect the meter signal wire from the meter.
3. Remove screw and washer at drive yoke. Remove powerhead mounting screws. The entire powerhead assembly will now lift off easily. Remove piston retaining plate screws.
4. Pull upward on end of piston rod yoke until assembly is out of valve. Remove and replace seals and spacers.
5. Take piston assembly and push piston into valve be means of the end plug. Twist drive yoke carefully in a clockwise direction to properly align it with drive gear. Reinstall piston retaining plate screws. (Same as E7 – E9?)
6. Place powerhead on top of valve. Be sure drive pin on main gear engages slot in drive yoke (wide side of drive yoke upright must face to the left away from the motor).
7. Replace powerhead mounting screws. Replace screw and washer at drive yoke.
8. Return bypass or inlet valving to normal service position. Water pressure should now be applied to the conditioner, and ay bypass line shut off.
9. Replace the control valve back cover. (Same as E11 – E13?)
10. Follow steps A.9 through A.13.

G. <u>To Replace Meter</u>

1. Follow steps A.1 through A.3.
2. Remove two screws and clips at bypass valve or yoke. Pull resin tank away from plumbing connections.
3. Remove signal wire from meter.
4. Remove two screws and clips at meter and pull the meter out of the control valve.
5. Apply silicone lubricant to four new O rings and assemble to four ports on new meter.
6. Assemble meter to control valve. Note: meter portion of module must be assembled at valve outlet. Install two screws and clips.
7. Install signal wire into new meter.
8. Push resin tank back to the plumbing connections and engage meter ports with bypass valve or yoke.
9. Attach two clips and screws at bypass valve or yoke. Be sure clip legs are firmly engage with lugs.
10. Return bypass or inlet valving to normal service position. Water pressure should now be applied to the conditioner, and any bypass line shut off.
11. Check for leaks at all seal areas.
12. Follow steps A.9 through A.13.

H. <u>To Check Drive Motor Operation</u>

1. Remove the control valve back cover.
2. To verify drive motor operation, push service button located on back of motor. Motor should run. Release button. After 1 minute, the control should automatically advance to Rapid Rinse (cycle #4) position. It will remain in Rapid Rinse for 5 minutes and then advance to Service position.

Troubleshooting Guide

SYMPTOM	PROBABLE CAUSE	CORRECTION
1. Softener fails to regenerate automatically	Power supply plugged into intermittent or dead power source	Connect to constant power source
	Disconnected meter cable	Reconnect cable
	Improper control valve programming	Reset program settings
	Defective power supply	Replace power supply
	Defective circuit board or meter	Replace or repair
	Defective drive motor	Check motor operation by activating the service button on back of motor
2. Regeneration at wrong time	Time of day improperly set, due to power failure	Reset time of day programming and install 9-volt battery
	Regeneration time set improperly	Reset regeneration time programming
3. Loss of capacity	Increase raw water hardness	Reset unit to the new capacity
	Brine concentration and/or quantity	Keep brine tank full of salt at all times. Clean it yearly. Salt may be bridged. If using a salt grid plate, ensure refill water is over it.
	Resin fouling	Call dealer. Find out how to confirm it. Clean the resin and prevent future fouling.
	Poor distribution, channeling (uneven bed surface)	Call dealer. Check distributors and backwash flow.
	Internal valve leak	Call dealer. Replace spacers, seals and/or piston.
	Resin age	Call dealer. Check for resin oxidation caused by chlorine. Mushy resin.
	Resin loss	Call dealer. Check for correct bed depth. Broken distributors. Air or gas in bed: well gas eliminator. Loose brine line.
4. Poor water quality	Check items listed in #1, #2, & #3	
	Bypass valve open	Close bypass valve.
	Channeling	Check for too slow or high service flow. Check for media fouling.

SYMPTOMS	PROBABLE CAUSE	CORRECTION
5. High salt usage	High salt setting	Adjust brine tank refill time
	Excessive water in brine tank	See symptom # 7.
	Constant flow through the unit	Indicates plumbing leak (i.e. toilet tank)
	Improperly set hardness	Reset programming
6. Loss of water pressure	Scaling / fouling of inlet pipe	Clean or replace pipeline. Pretreat to prevent.
	Fouled resin	Clean resin. Pretreat to prevent.
	Improper backwash	Too many resin fines and/or sediment. Call dealer. Reset backwash flow rate, and/or adjust.
7. Excessive water in brine tank and/or salty water to service	Plugged drain line	Check flow to drain. Clean flow control.
	Dirty or damaged brine valve	Clean or replace brine valve.
	Plugged injector	Clean injector and replace screen.
	Low inlet pressure	Increase pressure to allow injector to perform properly. (20 psig minimum)
	Excessive brine refill cycle time	Reset brine refill cycle time.
8. Softener fails to use salt	Check items listed in #1	
	Improper control valve programming	Check and reset programming
	Plugged/restricted drain line	Clean drain line and/or flow control
	Injector is plugged	Clean or replace injector and screen
	No water in brine tank	Check for restriction in BLFC. Ensure safety float is not stuck. Check brine tank for leaks.
	Water pressure is too low	Line pressure must be at least 20 psi.
	Brine line injects air during brine draw	Check brine line for air leaks
	Internal control leak	Call dealer. Check piston, seals and spacers for scratches and dents.
9. Control cycles continuously	Faulty circuit board	Replace circuit board.
10. Continuous flow to drain	Foreign material in control	Call dealer. Clean valve, rebuild unit.
	Internal control leak	Same as above.
	Valve jammed in backwash, brine or rapid rinse position	Same as above.
	Motor stopped or jammed.	Replace motor.

FCC Caution.

This device complies with part 15 of the FCC Rules. Operation is subject to the following two conditions: (1) This device may not cause harmful interference, and (2) this device must accept any interference received, including interference that may cause undesired operation.

Any Changes or modifications not expressly approved by the party responsible for compliance could void the user's authority to operate the equipment.

Note: This equipment has been tested and found to comply with the limits for a Class B digital device, pursuant to part 15 of the FCC Rules. These limits are designed to provide reasonable protection against harmful interference in a residential installation. This equipment generates uses and can radiate radio frequency energy and, if not installed and used in accordance with the instructions, may cause harmful interference to radio communications. However, there is no guarantee that interference will not occur in a particular installation. If this equipment does cause harmful interference to radio or television reception, which can be determined by turning the equipment off and on, the user is encouraged to try to correct the interference by one or more of the following measures:
-Reorient or relocate the receiving antenna.
-Increase the separation between the equipment and receiver.
-Connect the equipment into an outlet on a circuit different from that to which the receiver is connected.
-Consult the dealer or an experienced radio/TV technician for help.