1936

Home manufactured "loose-fill" insulation

Roy Ernest Spriggs
Iowa State College

HOME MANUFACTURED "LOOSE-FILL" INSULATION

by

Roy E. Spriggs

A Thesis Submitted to the Graduate Faculty
for the Degree of

MASTER OF SCIENCE

Major Subject Agricultural Engineering

Iowa State College

1936

TABLE OF CONTENTS

INDEX TO TABLES

I. INTRODUCTION

A. Object of Study - General Statement

The object of this study is to discover if possible some cheap and simple process for making a satisfactory "loose fill" insulating material from such agricultural wastes and by-products as straw, corn stalks, leaves, shavings and similar fibrous materials, some of which are available on all farms. The processing is to be of such nature that the average farmer can manufacture from such of these materials as he may have available an insulating product suitable for use on his home and farm buildings.

The term "loose fill" has been chosen as the name of this insulating material because it is to be manufactured, remain and be used in the bulk state. This "loose fill" material is to be used to fill the spaces between the side wall studdings and between attic joists and rafters on wooden structures; hence the origin of the term "loose fill". No attempt will be made to manufacture any type of structural insulating board.

It has long been known by the farmer that such fibrous materials as straw, shavings, leaves and similar materials possess insulating value. Many farmers follow the custom of banking their homes and farm barns during the winter with such materials as an added protection from the wintry blasts. It is the object of this study to see if some practical means

cannot be devised to convert this material into a more efficient, permanent, satisfactory and usable form by the use of proper processing and chemical treatments.

B. Problem Study in Detail

In order to formulate a fair and accurate opinion of the problem the following studies, experiments and investigations were made:

1. Search for existing direct and related information.

2. Design and construction of an apparatus for accurately measuring heat flow in fibrous materials.

3. Investigation of possible sources of raw materials suitable and easily convertible into a "loose fill" insulating material.

4. Investigation of existing machinery to see if a suitable machine can be found for the processing operation.

5. Investigation, by means of the constructed heat flow test machine, to determine the most satisfactory physical condition for "loose fill" materials; also to determine the relative insulating value of the various materials when properly processed.

6. Investigation to determine the extent of possible danger from fire, decay, insects and rodents with a study of recommended chemical preventative treatments and their application.

7. Investigation, by means of the heat flow test machine, of the effects of various recommended chemical treatments on the insulating value of the various products when treated.

8. Investigation, by means of the heat flow test machine, of the possible detrimental effect of moisture on the insulating value of "loose fill" insulating material.

9. Investigation to determine best method to follow when insulating homes and farm buildings.

10. Study and evaluation of evidence collected with the idea of being able to render a reliable opinion on the various aspects of the problem.

C. Importance of Problem

The prime purpose of insulation is to retard the passage of heat. In other words, the object of insulation is to keep heat where it belongs and to keep it away from where it is not wanted.

The economical production of dairy and poultry products, especially in the northern zone (30, P. 5), is determined to a large extent by how well the barn and poultry house is insulated. Its addition to these buildings is a factor capable of changing the farmer's business from a loss to a profit.

It is becoming well known that the relative comfort one's dwelling affords is dependent directly upon how well it is insulated.

Few live stock barns or homes, in the northern zone, are adequately insulated. Lack of insulation is not confined to the country, because most city homes are just as poorly insulated.

The discovery of a simple and cheap process for making insulating material from agricultural wastes will also afford the city dweller an opportunity to add to his comfort and profit. The cheapening of this item will have greater effect on construction costs than any other. It will mean better homes at less cost, and better barns that will yield greater returns for the money invested.

II. RELATED GENERAL INFORMATION

A. Insulation

Strictly speaking, any material which serves to retard or restrict the passage of heat may be termed an insulator. Heat has the property of passing directly through every known material, although the rate of travel through some is less rapid than through others. For example, heat flows readily through plaster, concrete, brick and metals; such materials in the general sense we term conductors rather than insulators.

Heavy, dense materials usually make good heat conductors

while light, porous cellular materials which retard the flow of heat are poor conductors, and therefore splendid insulators. Scientists have learned that the best insulator is one which contains billions of microscopic air cells. Air is the best known insulator, but its efficiency is effective only when it is confined in pockets so small that it remains "still" or "dead". Minute, "confined air" spaces do make excellent insulation, and the material which contains the greatest number of these per unit volume is usually the best insulator.

B. Theory of Heat Flow

Heat travels in three different ways -- by radiation, by convection, and by conduction. Heat always passes from a higher to a lower temperature. If the temperature is the same on both sides of a wall there is no heat transfer.

Radiation. Radiation is the transfer of heat in a straight line through space. For example: when you stand so that the sun shines on you, you are warmed by the sun's "radiated" heat; when you step into the shade you feel cool because this radiated heat cannot strike you (18, P. 128; 20, P. 246).

Conduction. Conduction is the passing of heat from one body to another by actual contact. For example: when you place a poker in the fire, the heat is "conducted" by the metal; a direct metal path through which it flows up to your

hand (18, P. 128; 20, P. 244).

Convection. Convection is the transfer of heat by means of circulating air (or gases) and liquids. For example, heat from a register is carried up and through a room by "convection currents"; if you blow a fine powder or smoke over a radiator you can see the effects of these currents (18, P. 128; 20, P. 245).

In winter, heat from inside a house first passes, by conduction, through the interior finish to the hollow air spaces between the walls. Through this space it passes by radiation and convection to the outer walls, through which it again passes by conduction and escapes into the outdoor air. In the summer this process is reversed.

C. Measurement of Heat Flow

1. Theory of measurement.

The thermal conductivity of a homogenous material is the rate of heat flow under steady conditions expressed in Btu. per hour per square foot and per degree F. temperature difference per inch in thickness in direction perpendicular to the area and designated by K. The statement may be expressed by the following equation:

$$k = \frac{QL}{A(T' - T'')} \quad \text{(23, P. 95; 1, P. 92-93)}$$

where Q = quantity of heat flowing per unit of time, as Btu.

per hr.

L = length of path of heat flowing, as inches

A = area perpendicular to direction of heat flow, in ft. square

T" = temperature at warm end of path, degrees F.

T' = temperature at cold end of path, degrees F.

The reciprocal of conductivity (k) is resistivity (r), (1/k) thus being the temperature difference per inch of thickness necessary to make 1 Btu. flow by conduction through 1 ft. square of area of the material through which the heat flows.

Analogous to the terms conductivity and resistivity, which apply to a material, we have the terms conductance (C) and resistance (R) which are applied to the unity of surface of a body, and which are otherwise quite like the above. Conductance (C), expressed 1/R, is thus the rate in Btu./hr. of heat flow by conduction, per degree F. difference, and per ft. square of area of plane parallel surfaces of the body. Resistance (R), accordingly is the temperature difference required to exist between two plane parallel surfaces of a body of homogeneous material to maintain a heat flow of one Btu./hr. by conduction per ft. square of surface area. Thus the following equation: $R = A (T' - T") /Q$. The principal usefulness of conductance and resistance is in the case where the body in question is a thin film at the boundary of a fluid and another medium, thickness of this film being unknown or inconvenient to take into account. The

film property is thus given by experiment in terms of film conductance k, (or film resistance (R), 1/k) as opposed, say to insulating material property always expressed in K.

Where heat flows through one medium to another, through one or more intermediate resistances, the transmittance of the whole system in direction perpendicular to plane parallel faces, is the rate of heat flow per ft. square of area of a specified side of the boundary, divided by the difference in temperature of the two media. This is also called the overall coefficient (U) of heat transfer of the system. The several resistances may be due to several materials in layers or a homogeneous body with account taken of surface resistance.

Definitions by Rowley and Algren (25, P. 5):

"k is used to indicate the thermal conductivity of a homogeneous material and is the amount of heat expressed in Btu. transmitted through one square foot of homogeneous material one inch thick per hour per degree temperature difference between the two surfaces of the material."

"C represents the thermal conductance of a material and is the amount of heat expressed in Btu. transmitted through one square foot of material per hour per degree difference in temperature between the two surfaces. (It will be noted that C is different from k in that it represents the flow of heat through the material as built and not per one inch thick.)"

"U is used to designate the overall coefficient of heat transmission for a complete wall. It represents the number of Btu.

transmitted through one square foot of the wall per hour per degree difference in temperature between the air on the inside and the air on the outside of the wall section under test."

Thermal Conductivity Equation by F. C. Houghten (9b, P. 34):

"$k = \frac{qL}{A(T' - T'')}$

k = thermal conductivity (heat transmitted in Btu. per square foot, per hour, per degree difference F per inch in thickness)

q = heat transferred per unit time (Btu. per hour)

L = length of path of heat flow (inches)

A = area (square feet)

T' = temperature, warm side (F)

T" = temperature, cold side (F)."

2. Measuring devices used.

There are two general and commonly used types of apparatus for determining the conductivity of materials known as the "plate method" and the "box method".

The "plate method" of testing insulating materials consists in the maintenance of a constant temperature difference between two flat metal plates mounted parallel to each other, and the measurement of the rate of heat flow through a flat slab of the test material placed between the plates (4, P. 37; 25, P. 9; 32, P. 20). This method is more specifically for small samples of homogeneous materials, the surfaces of

which are smooth enough to give reasonably good contact between the plates. This procedure gives as its final result the thermal conductivity (k) of the test material with great accuracy. There are many methods used for accurately determining the temperature on each side of the specimen, but in the main the principle involved is the same.

The "box type" applied to a variety of testing methods, but generally we think of this as the method employed for determining the overall heat transmission coefficient from air on one side to air on the other side of the material, and as being particularly adapted to testing built-up sections whose surfaces are too large and rough to employ the hot plate method (25, P. 11; 32, P. 17).

It is not the object of this study to investigate the various heat flow test mechanisms in use as to their merits, but with the idea of getting suggestions which would enable the devising of some practical apparatus, easily and quickly constructed, which could be used for determining the relative insulating values of the materials under consideration, with a considerable degree of accuracy.

The "plate method", since it is especially well adapted for testing small specimens in the laboratory, has been chosen as the method to use in determining the relative insulating value of the various "loose fill" insulating materials under consideration. The heat flow test box especially

designed for our insulation studies involves the "plate method" principle. A complete description of the apparatus, especially designed and constructed for our insulation study, will be found under the heading "EXPERIMENTAL".

D. Commercial Insulating Materials.

1. Composition.

There are many available raw materials which when properly processed can be converted into first class insulators. Some derive their insulating value from their cellular structure while others derive their insulating value from the fact that they may be converted into a fluffy mass which traps a high percentage of air. Any material to be an efficient insulator must either possess or be capable of being converted into a physical condition such that innumerable small air spaces are formed. "Still" or "dead" air is the best insulator known and the more "dead" air trapped within the material the better the insulator it will be (20, P. 243).

Raw materials commonly used are corn stalks, sugar cane fibre, cork, cotton, eel grass, flax straw, wool, wood fibre, blast furnace slag, lime rock, gypsum, and many others too numerous to mention (30, P. 4-5).

2. Commercial forms.

a. Board. There are many commercial forms of artificial

board on the market possessing both structural and insulating value. These are manufactured mainly from plant and vegetable fibre. This artificial board may be used for sheathing or may take the place of lath as a plaster base, or may be used exposed for interior finish on walls and ceilings.

b. Blanket insulation. This material consists of a quilted, fluffy, loose mass of fibrous material usually covered on both sides with a layer of paper or fabric. It is commonly called "blanket" or "quilt" insulation. This material is used only for its insulating qualities and usually comes in suitable size for packing between studdings and floor joists.

c. "Loose fill". "Fill" insulation is similar to "blanket insulation" differing mainly in that it remains in and is used in the loose state. Raw products mainly used are granulated cork, shredded vegetable fibre, and minerals such as gypsum, limestone, slag, etc. converted into fibrous materials.

E. Common Available "Loose Fill" Raw Materials

1. Raw materials.

Leaves, various types of straw, wild hay, corn stalks, sawdust, shavings and similar fibrous materials are or may be converted into efficient "loose fill" insulating material.

Many of these materials in the raw state have been long used by farmers to insulate their homes and farm barns against the low temperature of winter. Some of the materials make efficient insulators in the raw state, but in most cases the insulating qualities can be improved by a change in the physical condition.

2. Availability.

Most of the fibrous materials other than sawdust and shavings are available as by-products on the average farm. Flax straw, which can be converted into ideal "loose fill" insulating material, is available on most farms in the northern section as a useless by-product. Oak leaves, which may be converted into ideal insulating material, are abundant over most of the northern section. Sawdust and shavings are always available at small cost in all sections. Corn stalks are usually available as by-products on most farms and they rank high in the available insulating material list.

3. Cost.

Leaves, corn stalks and flax straw have little commercial value; usually the handling charge is the only cost involved. Straw other than flax has a commercial value, but usually not more than three or four dollars per ton. Sawdust and shavings may always be obtained at small cost. Shavings may be obtained baled at from three to four dollars per ton.

4. Processing requirements.

Any fibrous material which can be separated into individual strands or fibers makes suitable raw insulating material. The efficiency of an insulant depends primarily upon the air spaces which it contains. Next to a perfect vacuum, the most effective insulation against the flow of heat is the confined air in these spaces. In order to be most effective the air space must be absolutely enclosed and so small that circulation within it and radiation across it is reduced to the minimum. Therefore, the material which contains the greatest number of these small air spaces per unit of volume is the most efficient insulator. Raw materials suitable for processing are those which can be converted into a fluffy, fibrous mass capable of trapping a very high percentage of "dead" air. Many kinds of straw, leaves and corn stalks are capable of meeting processing requirements.

5. Desirable characteristics of "loose fill".

a. Durability. Materials to make efficient insulators must possess lasting qualities. Some materials are more resistant to decay than others, hence more desirable as insulation. Oak leaves, flax straw, corn stalks and shavings if held with a moisture content near ten per cent will last indefinitely.

b. Moisture. Moisture increases the density of any

insulating material and as the density increases the insulating value decreases due to the fact that air is displaced by water. Some materials have a great affinity for water, hence cannot be converted into desirable insulating material.

c. Density. The lower the density up to a certain point the better the insulating value. Densities greater than ten pounds per cubic foot after processing are not desirable because of the greater tendency to settle. Settling leaves uninsulated areas. That is why sawdust does not make a desirable insulating material for use in side walls.

III. EXPERIMENTAL (APPARATUS, RESULTS AND OBSERVATIONS)

A. Apparatus

1. Heat flow test apparatus designed and constructed for this study.

a. The detail drawings (Fig. 1) show the arrangement and construction of the heat flow test apparatus designed and constructed especially for this insulation study.

b. Construction. The test box is made entirely of ½" and 1" commercial insulating board. Nu Wood was the material used but any standard insulating board could be used. The insulated box is constructed in separate units to provide accessibility. The water and heating units are

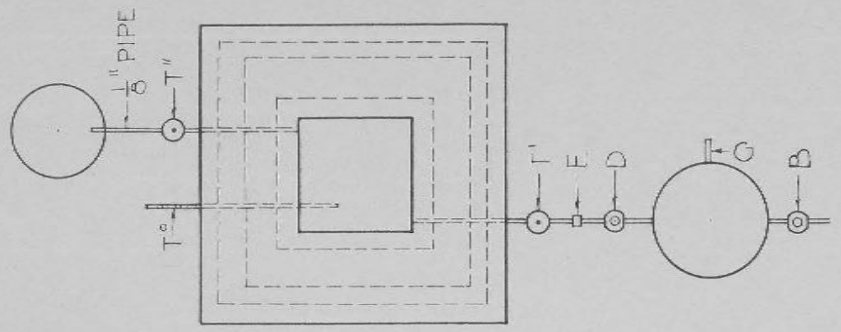

ASSEMBLY-TOP VIEW
LID J REMOVED

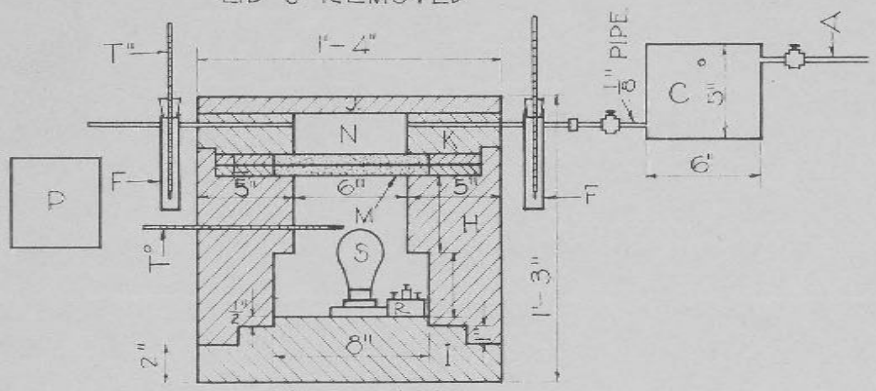

ASSEMBLY
CROSS SECTION
SCALE 1/8" = 1"

DETAILS

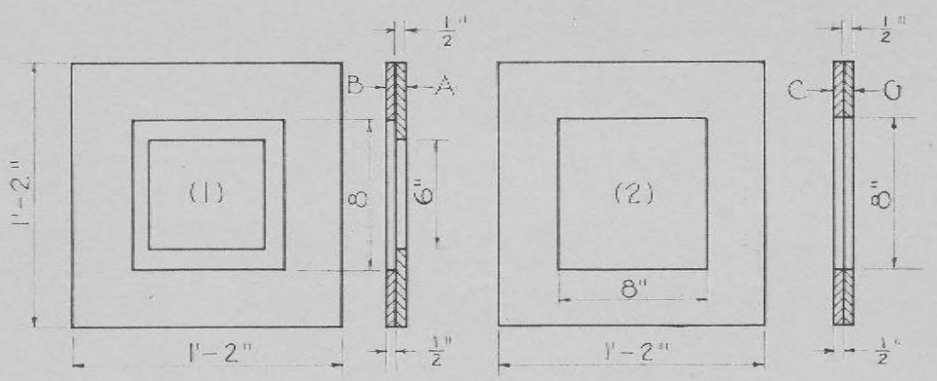

SPECIMEN TRAYS
SCALE 1/8" = 1"

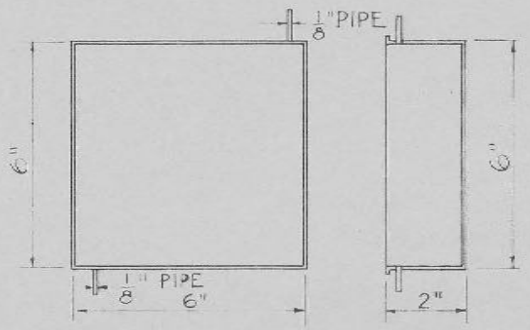

SHEET COPPER TRAY
SCALE 1/4" = 1"

A. COLD WATER INLET
B. INLET CONTROL VALVE
C. WATER GRAVITY TANK
D. WATER CONTROL VALVE
E. PIPE UNION
F. THERMOMETER WELL
G. OVERFLOW PIPE
H. SIDEWALL SECTION
I. BOTTOM SECTION
J. COVER
K. WATER PAN HOLDER
L. TEST SAMPLE FRAME
M. SHEET COPPER
N. WATER PAN
O. TEST SAMPLE
P. CATCH PAN
R. THERMOSTAT
S. ELECTRIC BULB
T'. COLD WATER
T". HOT WATER
T°. OVEN TEMPERATURE

HEAT FLOW
TEST APPARATUS
DESIGNED BY R.E. SPRIGGS - 1934
IOWA STATE COLLEGE

Figure - 1

independent and may be separated for repair or adjustment.

c. Parts. The box proper is made in six separate sections for convenience in getting at the various units. The heating unit and thermostat are fastened to the base over which sets the side wall section marked H. The side walls hold and support the specimen trays over which is the water pan and holder marked K. A lid marked J covers the water pan and top of the box. Brass pipes lead to and from the water tray and connect with thermometer wells that are situated just outside the box. The intake feed pipe leads from a gravity tank which maintains a constant head by means of an over-flow pipe marked G. Three thermometers are used and are located one in each thermometer well and one in the hot box.

d. Operation. Water from the gravity tank C flows through the water pan H which rests on the specimen to be tested. Pan N is made of thin sheet copper, so that as the heat passes through the specimen it can be readily absorbed by the water. Thermometers are placed in the wells on each side of the water pan, and by this method the amount of heat passing through the specimen can be determined. The thermostat marked R operates a circuit breaker which controls the light furnishing the heat. A uniform heat of desired temperature is maintained in the hot box. Heat in the hot box is determined by means of the thermometer marked T^{o}. By observing time, temperature and weight of water flow, the heat flow

through the material can be determined from the following relation as already indicated under theory of heat transmission (32):

$$k = \frac{qL}{A(T' - T'')}$$

The specimen trays are arranged in such a way that either ½" or 1" specimens can be tested. Tray No. 1 shown on the detail sheet is arranged for testing ½" specimens. A copper screen or plate is placed between tray frames A and B. Tray No. 2 is arranged for testing inch specimens. The copper screen or plate is indicated as shown at M on the assembly drawing. Specimens of various thicknesses may be tested by placing paper frames under the specimen tray to give it the proper height. The specimen in all cases must press firmly against the water pan. The water should be regulated by means of valve D, to flow slowly through the pan H which allows time for the water to be heated. Water enters at one corner and leaves at the diagonal corner to avoid currents and aid in uniform heat absorption. The overflow gravity tank furnishes a constant head which insures a uniform flow.

e. Precautions. The thermometers were calibrated to insure accuracy in determining temperature of water and hot oven. The accuracy of the results depends, to a very great

extent, on the precision and care with which the thermometers determining the temperature of the water are read. A reading glass was used when taking temperature readings enabling reading accuracy to within a tenth of a degree.

The water was allowed to run slowly in and out of the water pan. Best results were obtained when not more than two pounds of water ran through the pan per hour. This gave a higher temperature reading increasing accuracy of results. A smaller amount of water can be weighed with greater accuracy. A small error in weight of water has a decided effect on the accuracy of results. Care was taken to see that sediment did not collect in the water pipes or pans which might restrict the flow of water.

Before taking readings the complete testing unit with test samples in place was raised to the saturation temperature. This pre-heating requires about two hours time. After the test box is heat saturated, test specimens can be changed with little delay, especially if ½" specimens are used. A half hour of time is sufficient for changing specimens.

f. Data. All tests of importance were four hours in duration while temperature readings were taken every fifteen minutes, and the water was weighed every hour. Due to the human error involved, it is necessary in order to get accurate results to carry on the test and collect data continuously over at least a three-hour period. Temperature readings taken

every fifteen minutes over a period of at least three hours tend to iron out slight irregular fluctuations in temperature increasing the accuracy of results. Water weighed every hour over a three or four-hour period tends also to compensate for irregular water flow. Data sheets were always arranged in advance so that all readings could be correctly recorded at the time they were taken.

2. Processing machinery.

a. Processing requirements. Next to a vacuum "dead" or "still" air is one of our best known insulators (20, P. 243). Air can only be "still" or "dead" when confined in so small a space or cell that it cannot circulate. Wood and most similar fibrous materials such as straw and leaves are natural insulators because each fibre contains tiny cells which constitute "dead" air spaces.

Sheepswool is a well known insulator provided by nature as a protection for the animal upon which it grows (28, P. 45). The efficiency as an insulator comes from the fact that little individual pockets or cells are formed by the kinky strands of hair between which air is confined as "dead" or "still" air.

In order to convert wood, leaves, straw and similar fibrous materials into efficient products for insulating purposes, it is necessary to obtain a physical condition which approaches that of the wool on the back of the sheep. This

requires that the material be shredded and separated into individual hair-like fibers enabling the formation of a mass having physical characteristics similar to wool. It is possible by proper shredding and massing to obtain a product that in insulating efficiency approaches closely that of sheepswool.

The conversion operation is distinctly one of shredding and not grinding or chopping; both grinding and chopping materially increase the density but without a proportionate increase in insulating value. The ideal for an insulating material is a high percentage of trapped air with a low density; this can only be obtained by shredding.

b. Machines used. In quest for a machine that would perform this shredding operation perfectly, it was found that none existed. It was then a question of finding the machine that would do the work with the greatest degree of success. Experiments in processing were made with burr mills, but the results were not satisfactory. Individual straws were too long and not well shredded and split. Increasing the fineness of grinding increased the density with little improvement in quality; the fine powdery material increased and some long unbroken straws remained.

Repeated tests indicate that the ordinary hammer mill properly adjusted can be made to do a very satisfactory job of processing. The combined shredding and pounding action of this machine enables the production of a product that compares closely in insulating value with the commercial "loose

fill" products that are now on the market. It cannot be said that the machine produces a perfect product when compared with the ideal because in all cases more fine material was produced than desirable and many pieces remained that were not completely split and shredded. However, the product is very satisfactory and may be used with success as it comes from the mill, but additional hand screening to remove the very fine material will improve the quality and add little to the cost. Experiments indicate that with the hammer mill a satisfactory product can be produced, but with other machines tried the results were questionable.

c. Fineness. The only satisfactory method of determining the fineness obtained by grinding is by experiment because the dryness and kind of material determines what the final product shall be. Best results will be obtained by experimenting with several sizes of sieves to see which produces the best product. Trial tests should be made to see which sieve produces the best shredded mass with the lowest density. Our results seem to favor using the inch sieve, but the range of materials used were not sufficiently large to form a definite opinion.

d. Speed of processing. The speed with which the raw material can be converted into the proper physical condition depends, to a large extent, on the condition and kind of material used. Dry corn stalks can be processed at twice the

speed of flax straw. With the ordinary portable hammer mill, the average time required to convert the various raw materials to the proper physical condition is at about the rate of 3/4 ton per hour. It will take about 1½ tons of this material to insulate the ceiling and side walls of an ordinary home, figuring seven pounds to the cubic foot.

e. Determining the raw material requirement. The amount of raw material required can be obtained from the density chart. Seven pounds of the raw material will yield about a cubic foot when processed. Determine the cubic feet of insulation required then multiply by seven and you have the amount of raw material required. This figure may provide a little extra material.

f. Cost of processing. The cost of processing with a hammer mill will vary but many operators of portable mills will do the work at the rate of three dollars per hour. We used an ordinary portable Papec hammer mill for most of our successful work, and in many localities there are mills of this character for hire.

B. Heat Flow Test Data Sheets

1. Oat straw.

Tests on oat straw were made during the summers of 1934 and 1935. All the straw was processed with a standard portable

Papec hammer mill. The fineness of the material was determined by using 1", ½" and ¼" sieves in the hammer mill. The tabulated results below give the conductivity coefficient (k) in Btu. per hour per square foot per degree Fahrenheit per one inch in thickness.

TABULATED RESULTS

TABLE NO. I (OAT STRAW)

Test No. and year:	Description	Density, lbs. per cu. ft.	Thermal conductivity (k)
1 - 1935:	Using 1" sieve	5.616	.26
2 - 1934:	Using ½" sieve	7.28	.25
3 - 1935:	Using ½" sieve	7.89	.31
4 - 1935:	Using ½" sieve and passing over ¼" sieve	5.831	.28
5 - 1935:	Using ¼" sieve	10.23	.32
6 - 1935:	Straw passing 1/8" mesh sieve	9.23	.31
7 - 1935:	Straw passing 14 mesh sieve	10.66	.31

Discussion:

The straw used for the tests made in 1934 was very dry, having been baled the previous year and during the intervening time allowed to remain in a dry hay mow. The dryness of the material evidently had some effect on conduction because the figure is lower than any obtained in the 1935 tests. The straw used in the 1935 tests was produced that year. The oats were harvested with a combine and the straw allowed to run in windrows. The straw was tougher and did not shred up as well as the straw used in the 1934 test.

Tests No. 1 and No. 2 make a very good comparison

because the densities are about the same. The difference in conductivities very likely comes from the fact that the material used for Test No. 3 was damp and possibly not as well shredded as that used for Test No. 2.

Test No. 4 was made using the same material as that used for Test No. 3 but with the exception that all fine material that would pass a ¼" sieve was removed. This caused a drop of 26% per cu. ft. in density and showed a slight improvement in thermal conductivity. The change in conductivity is slight but the drop in density is a very important factor, since a lower density means less settling and a lowering of the material requirement. A comparison of these two tests indicates that the fine material is detrimental and should be avoided.

Test No. 5 compared with Test No. 2 and No. 3 indicates that increasing the fineness of the material does not improve its insulating value. There was an increase of 40% in density and a slight loss in insulating value. A comparison of the tests indicates that increasing the fineness of the material is a decided disadvantage.

Tests No. 6 and No. 7 also prove that increasing the fineness of the material is a decided disadvantage since density is increased and insulating value is not improved and may show a loss.

Test No. 1 indicates that the inch cut is best, because of the resulting low density and high insulating qualities. A density this low will tend to eliminate the settling

problem. Settling tests indicate that material will settle very little, if any, when the densities are this low.

Conclusions: A comparison of the seven tests indicates that oat straw makes the best insulating material when using an inch sieve in the hammer mill.

As far as thermal conductivity is concerned, oat straw it appears can be converted into an insulating material that ranks with the best "loose fills" now on the market.

2. Oak leaves.

Tests on oak leaves were made during the summers of 1934 and 1935. The leaves were gathered during the month of August 1934, having been on the ground since the fall of 1933. They were very dry and powdery and pretty well saturated with dirt, which had been mixed with them during the spring dust storms. This dirt was difficult to remove, and is a factor which increased the density of the processed material. Ordinarily leaves would be free from such dirt. All the leaves were processed with a Papec hammer mill. The tabulated results below give the conductivity coefficient (k) in Btu. per hour per square foot per degree Fahrenheit per one inch in thickness.

TABULATED RESULTS

TABLE NO. II (OAK LEAVES)

Test No. and year:	Description	Density, lbs. per cu. ft.	Thermal conductivity (k)
8 - 1935:	Using ½" sieve	6.85	.29
9 - 1934:	Using ¼" sieve	11.34	.236
10- 1935:	Using ½" sieve and retained on ¼" sieve	5.57	.240
11- 1935:	Using ½" sieve	9.92	.271
12- 1935:	Using ¼" sieve	13.33	.255
13- 1935:	Material passing ¼" sieve and retained on 1/8"	7.84	.262

Discussion:

Test No. 8 evidently had a great deal of the fine material removed, because its density is low as compared with Test No. 11 which is a 1935 test of the same material. Comparing with Test No. 10, which is a similar material with the fine particles removed by being passed over a ¼" sieve, it is found that the density and thermal conductivity check very closely, which also indicates that Test No. 8 did not contain much fine material. These tests all indicate that the fineness of the material can vary over quite a range without causing much of a change in thermal conductivity, but the density is increased as the fineness of the material is increased.

Comparing Test No. 10 and No. 11, which are similar except that No. 10 was passed over a ¼" sieve to remove the fine material, we find nearly a 50% reduction in density with a slight improvement in insulating value of No. 10 by having the fine material removed.

Tests No. 9 and No. 12 were made on similar materials and similar results were obtained. The densities of both these materials are high and if used a great deal of settling would result. As far as thermal conductivity is concerned these materials are ideal, but the high density would tend to reduce their value as insulators.

Test No. 13 also indicates that an increase in fineness increases density and improves insulating qualities very little.

Conclusions:

Oak leaves can be converted into very high class insulation material when proper processing methods are used. When this material is compared with other "loose fill" materials now on the market, it is found to have a thermal conductivity ranking with the best.

Taking both density and thermal conductivity into consideration, it is found that the ½" cut is the most desirable to use. The inch cut was not used, but it would seem that an inch cut might be used to advantage. Further tests using the inch cut would have to be run before this could be determined.

3. Corn stalks.

All the tests with the exception of No. 14 were made during the summers of 1934 and 1935 on the same raw material. The raw material was gathered in August 1934 from a field of

standing stalks on idle land, being the remains of the previous crop. The stalks when gathered were very dry, and contained a very small percentage of their original leaves. The Papec hammer mill handled the material with ease and speed and produced a very satisfactory job of shredding. The percentage of very fine dust was not so noticeable, even in this dry state, as was the case with most of the other materials. The No. 14 Test, made in 1935, was taken from a bale of corn stalks that had been out of doors without cover for several years, and were badly decayed. It was not a very desirable raw material, but the best we could obtain at that time for the inch cut. Better material than this would always be used.

The tabulated results below give the conductivity coefficient (k) in Btu. per hour per square foot per degree Fahrenheit per inch in thickness.

TABULATED RESULTS

TABLE NO. III (CORN STALKS)

Test No.; and year:	Description	Density, lbs. per cu. ft.	Thermal conductivity (k)
14- 1935:	Using 1" sieve	6.03	.259
15- 1934:	Using ¾" sieve	7.58	.265
16- 1934:	Using ½" sieve	4.46	.235
17- 1935:	Using ½" sieve	6.41	.275
18- 1935:	Using ½" sieve and passed over ¼" sieve	6.90	.242
19- 1935:	Using ¼" sieve	7.31	.273

Discussion:

All the tests show low densities and low thermal conductivities which are very desirable characteristics and they

indicate that all the materials will make very desirable insulators. Test Nos. 14, 16 and 17 are the most promising when both density and conductivity are considered. It is believed that if the same material had been used for the inch cut (No. 14) as was used for the half, Test No. 14 would have been better or just as good as No. 16. However, it would be difficult to produce a better all around material than that used for Test No. 16.

Conclusion:

Corn stalks may be converted into material that ranks with the best "loose fill" now on the market. Few materials now on the market have as desirable densities and thermal conductivities.

Corn stalks can be quickly processed with a Papec hammer mill.

4. Flax straw.

Tests on flax straw were made during the summer of 1935 on samples obtained from baled flax straw which had been stored for two years and was very dry and brittle. The dry condition caused the accumulation of more fine material during the processing operation than would ordinarily be the case. Flax straw, due to its fibrous nature, makes a very satisfactory insulating material when processed.

The tabulated results below give the conductivity coefficient (k) in Btu. per hour per square foot per degree

Fahrenheit per inch in thickness.

TABULATED RESULTS

TABLE NO. IV (FLAX STRAW)

Test No. and year:	Description	Density, lbs. per cu. ft.	Thermal conductivity (k)
20- 1935	Using 1" sieve	7.73	.274
21- 1935	Using 1" sieve and run over ¼" sieve	5.65	.274
22- 1935	Using ½" sieve	9.10	.284

Discussion:

Test No. 21 was made on the same material as used for Test No. 20 with the exception that the fine materials were removed by passing over a ¼" sieve. This caused no change in thermal conductivity but a decided improvement in density is noted. Most straw would not be as dry as the sample used, hence not as much dry material would be accumulated in the processing operation. However, Test No. 20 indicates that the 1" used on flax straw will produce a highly efficient insulation material.

Conclusions:

An examination of the thermal conductivity ratings as indicated above shows that few of the "loose fills" now on the market are equal in insulating value to materials produced from flax straw by means of the hammer mill.

5. Wild hay.

The test samples were taken from baled mixed wild hay which had been cut the previous year. The samples were taken

in 1934 and the tests were made in 1934 and 1935. The hay was June grass upon which was quite an amount of seed. The material was a little more difficult to process than other materials that were used.

The tabulated results below give the conductivity coefficient (k) in Btu. per hour per square foot per degree Fahrenheit per inch in thickness.

TABULATED RESULTS

TABLE NO. V (WILD HAY)

Test No.: and year:	Description	Density, lbs. per cu. ft.	Thermal conductivity (k)
23- 1934:	Using ¼" sieve	9.37	.290
24- 1935:	Using ⅛" sieve	9.14	.260

Discussion:

Many of the other available raw materials offered more promising possibilities as insulators, hence only two tests were made on wild hay. The two tests indicate that wild hay properly processed may be converted into an efficient insulator, as far as thermal conductivity is concerned. The density is a little high, but it might be possible to reduce this by using an inch sieve. Further tests on wild hay might be worth while, but it would seem that many other materials offer greater possibilities.

Conclusion:

Wild hay can be processed with a hammer mill and the resulting product has high insulating qualities.

6. Planer shavings and sawdust.

The planer shavings used for these tests were taken from a bale of commercial shavings that had been purchased for live stock bedding. The shavings were of mixed variety and represented average mill run. One sample was processed with a hammer mill to see if the insulating qualities could be improved. The material was processed without difficulty. The sawdust was made by a small combination circular saw from fir lumber.

The tabulated results below give the conductivity coefficient (k) in Btu. per hour per square foot per degree Fahrenheit per inch in thickness.

TABULATED RESULTS

TABLE NO. VI (PLANER SHAVINGS AND SAWDUST)

Test No. and year:	Description	Density, lbs. per cu. ft.	Thermal conductivity (k)
25- 1935	Planer shavings	6.85	.412
26- 1935	Sawdust	8.83	.444
27- 1935	Processed planer shavings using 1" sieve	11.50	.316

Discussion:

The results indicate a much lower insulating efficiency than obtained from other materials. Planer shavings were processed with a hammer mill using an inch sieve to see if the insulating qualities could be improved. The results indicate an improvement in thermal conductivity but the density has increased much more than desirable. The increase in density

destroys the gains made in thermal conductivity. The sawdust and planer shavings show about the same thermal conductivity but shavings having a much lower density are therefore more desirable to use.

Conclusions:

Planer shavings make more desirable insulators than sawdust. Sawdust has too high a density. Processing will not improve the value of planer shavings to any great extent.

7. Straw and corn stalks.

These tests were made in the summer of 1934 on material that was prepared the previous year by Professor Davidson. I do not know the exact ratio of oat straw to corn stalks, but the appearance was that the oat straw predominated. The material was all processed with a Papec hammer mill using a ¼" sieve. Due to the fineness of grinding, there was a high percentage of fine material. The material was all well shredded which indicates that the raw material was dry when processed.

The tabulated results below give the conductivity coefficient (k) in Btu. per hour per square foot per degree Fahrenheit per inch in thickness.

TABULATED RESULTS

TABLE NO. VII (STRAW AND CORN STALKS)

Test No. and year	Description	Density, lbs. per cu. ft.	Thermal conductivity (k)
28- 1934	Using ¼" sieve and loosely packed	6.96	.355
29- 1934	Using ¼" sieve and well packed in block	9.45	.285
30- 1934	Using ½" sieve and passed through 1/16"	10.30	.270
31- 1934	Using ½" sieve and passed over 1/16"	7.05	.260

Discussion:

Test No. 29 indicates the thermal conductivity of the material as processed. The sample was selected with care and the results may be taken as a good average. Test No. 28 was made from the same material but loosely packed in the test block. The results indicate that the air pockets may have been too large. This test has little significance since material under actual conditions would be more loosely packed. The test does indicate that it is not desirable to have the pockets too large. Test No. 30 was made on material obtained by passing the sample over a 1/16 inch mesh sieve and using the part passing through the sieve. An increase in density is noted with little change in thermal conductivity. Test No. 31 was made on a sample that had been passed over a 1/16 inch mesh sieve to remove the fine material. The density is greatly improved and a slight improvement in conductivity is noted. This test indicates that the original material as

used in Test No. 29 contained too much very fine material.

Conclusion:

The material as prepared has a rather high density indicating the presence of too much fine material. The material can be improved by removing the fine material. This indicated that coarser grinding would also improve the quality in that so much fine material would not be produced.

8. Effect of water on insulating material.

The material used in these tests was an average specimen of flax straw processed with a ½" cut. Water was mixed with the material in differing amounts to determine the effect of water on the insulating value. The material in neither case was completely saturated. Experiments on absorption indicate that the material when completely saturated will hold from 4 to 6 times its original weight.

The tabulated results below give the thermal conductivity coefficient (k) in Btu. per hour per square foot per degree Fahrenheit per inch in thickness.

TABULATED RESULTS

TABLE No. VIII (MOISTURE)

Test No. and year	Description	Density, lbs. per cu. ft.	Thermal conductivity (k)
32- 1935	Using ½" sieve, material moist	9.58	.540
33- 1935	Using ½" sieve, material moist	11.14	.436

Discussion:

Test No. 32 was made on material that had water added at the rate of 1.42 gallons to the cubic foot. The indicated density is for the dry material. Water about equal in weight to the material was added which did not saturate the material. Test No. 33 was made using similar material but about half the water was added as in Test No. 32. The tests both show that the heat flow has been materially increased by the addition of water.

Conclusion:

Water even in small amounts is detrimental to insulating material and should be avoided.

9. Chemical treatments.

All chemical treatment tests were made during the summers of 1934 and 35 and were for the purpose of determining the effect of the various chemicals on the insulating value of the various materials under consideration. Only chemicals having either toxic, water-proofing or preservative values were used. The chemicals were applied uniformly and in quantity sufficient to insure their effectiveness. In some of the tests more of the chemical was mixed with the "loose fill" material than necessary, for the purpose of checking the effect of the chemical on the insulating value of the material.

The tabulated results below give the conductivity

coefficient (k) in Btu. per hour per square foot per degree Fahrenheit per inch in thickness.

TABULATED RESULTS

TABLE NO. IX (CHEMICAL TREATMENTS)

Test No. and year	Description	Density, lbs. per cu. ft.	Thermal conductivity (k)
34- 1934	Corn stalks, "Lotel" chemical	5.27	.275
35- 1934	Corn stalks ½", creosote chemical	4.50	.255
36- 1935	Corn stalks ½", carbolineum chemical	19.62	.329
37- 1935	Corn stalks ½", carbolineum	12.26	.245
38- 1935	Corn stalks ½", carbolineum chemical	8.45	.252
39- 1935	Flax straw, ½", crank case oil	10.476	.258
40- 1935	Flax straw, 1", creosote treated	8.53	.241
41- 1935	Flax straw 1", water-gas-tar creosote	5.90	.332
42- 1935	Oat straw ½", creosote treated	10.95	.265
43- 1935	Planer shavings, carbolineum chemical	6.85	.437
44- 1935	Virgin sheeps wool, 50% oil	5.26	.245

Discussion:

Test No. 34, Lotol. "Lotol" is a patented product with a rubber base, and was applied mainly for its moisture resisting qualities, although it has some toxic value. It also tends to counteract settling. The chemical was applied to the ½" processed corn stalks in such a way that all particles of the insulating material were well coated. The results indicate that the chemical had little effect on the insulating value

of the material.

Tests No. 35, 40 and 42, Creosote. Creosote is a standard product that may be obtained at any hardware store at small cost. It has long been used as a wood preservative, and is known to be highly toxic.

The ½" cut corn stalks used in Test No. 35 were thoroughly soaked with a solution of creosote diluted 50% with gasoline after which it was allowed to dry. The gasoline evaporated quickly leaving the creosote well set. The creosote was diluted with gasoline to get greater penetrating and spreading qualities. Test No. 42 was made on ½" processed oat straw using the same chemical and method of application. In Test No. 40 on 1" cut flax straw, the creosote was not diluted and was applied at the rate of 1½ quarts to the cubic foot of material. The mixture was mixed in such a way that all particles were completely and evenly coated with creosote.

Carbolineum. Corn stalks ½" cut were treated with carbolineum in Tests No. 36, 37, 38, and 43. Carbolineum is a well known patented chemical with a creosote base. It has a high toxic value and has long been successfully used as a wood preservative. In Test No. 36 the chemical was mixed with the material at the rate of one gallon of the liquid to one cubic foot of the insulating material. This is a much heavier application than would be needed in actual practice, but even with this strong application the material

still retained its high insulating qualities. Tests No. 37 and 38 were on similar material mixed with the same chemical, but with gradually decreased strength of application. The chemical was added at the rate of 2.8 quarts to the cubic foot in Test No. 37 and 1.4 quarts in Test No. 38. Planer shavings mixed with carbolineum at the rate of 3/4 gallons to the cubic foot was the material used for Test No. 43. This was a much heavier application than would be necessary in actual practice, but with this heavy application little change was noted in the insulating qualities of the material.

Used crank case oil. Used crank case oil was applied at the rate of two quarts to the cubic foot of insulating material in Test No. 39 with little effect on the insulating value. Two quarts of oil were sufficient to coat all particles uniformly and adequately. The extent of the toxic value of crank case oil has not been established but it is known to have some value. It should also contribute some moisture resisting qualities. Crank case oil may be used to dilute creosote to advantage.

Water-gas-tar-creosote. Water-gas-tar-creosote was used in specimen No. 41 at the rate of 3/4 gallons to the cubic foot. This chemical is a by-product possessing high toxic value and also contributing water-resisting qualities. Its toxic value is known to compare favorably with creosote; its cost is much less than that of creosote. The application of the chemical appears to have little effect on the

insulating value of the material.

Virgin sheeps wool, 50% oil. Test No. 44 was made on virgin sheeps wool with a known oil constant of 50%. Some wool when clipped has a higher oil content than 50%. The resulting thermal conductivity as indicated by test shows that oil has little effect on the insulating value of the virgin wool. Average conduction as indicated by the Bureau of Standards on virgin wool is .26.

Conclusions:

"Loose fill" insulating material, as indicated by the above tests, can be successfully treated with various preservative chemicals without materially damaging the insulating qualities of the material.

10. Commercial insulating board.

The object of running the tests on commercial insulating board was to obtain some standard to which our "loose fill" insulating tests could be compared. Practically all insulating boards now on the market have been tested by the U. S. Bureau of Standards (1, P. 95; 28, P. 45). The boards used in these tests have an average conductivity rating of .34 as indicated by the U. S. Bureau of Standards tests. The object of the following tests is not to rate the insulating boards, but to develop a rating scale to check the possible accuracy of the heat flow test apparatus. The trade names for the

boards tested are Insulite, Nu Wood, and Temlok. All are standard, well-advertised products.

The tabulated results below give the conductivity coefficient (k) in Btu. per hour per square foot per degree Fahrenheit per inch in thickness.

TABULATED RESULTS

TABLE NO. X (COMMERCIAL INSULATING BOARD)

Test No.: and year:	Description	Density, lbs. per cu. ft.	Thermal conductivity (k)
45- 1934:	½" Insulite	16.9	.43
46- 1934:	½" Nu Wood	17.00	.342
47- 1934:	½" Temlok	15.00	.325
48- 1935:	½" Temlok	15.00	.325

Discussion:

The Insulite board taken for Test No. 45 was a piece of used material which appeared to be in first class condition. Close examination of this material revealed oil and paint spots. The high heat flow, as indicated by the test, evidently was caused by the oil and paint which had soaked in the material. This test has little value for comparative purposes, but it does have significance to the extent that it indicates how the insulating value may drop when oil or paint is applied. Further tests on used insulating board might develop some interesting and valuable results.

Tests No. 46 and 47 were made during the summer of 1934 while Test No. 48 was made during the summer of 1935. Test No. 48 was run for the purpose of checking the results of

1934. The 1935 test procedure was varied to the extent of changing the hot box temperature and the amount of water allowed to run per hour. The change in these items was to serve as an added check on accuracy. Tests 46, 47 and 48 have an average conduction of .330 which is very close to the Bureau of Standards average of .342. The indicated per cent of error is so slight that it can be neglected. Possibly, if enough materials had been tested the results might have checked exactly with the Bureau of Standards average.

Conclusions:

The heat flow apparatus as designed and operated may be relied upon to produce comparatively accurate results, without any additional corrections for deviation from the Bureau of Standards tests.

IV. DISCUSSION OF HEAT FLOW DATA SHEETS

A. Fineness

1. Effect on density.

The fineness range of the materials used was from pieces one inch long to very small particles.

TABLE NO. XI. RELATION OF FINENESS TO DENSITY

Size of material	Density	k
	(Oat Straw)	
1"	5.616	.26
½"	7.28	.25
¼"	10.23	.32
1/8"	9.23	.31
14 mesh to inch	10.66	.31
	(Leaves)	
½"	9.92	.271
¼"	13.33	.255
	(Corn Stalks)	
1"	6.03	.259
½"	6.41	.275
¼"	7.31	.273
	(Flax Straw)	
1"	7.73	.274
½"	9.10	.284

The above materials were selected as being a good average of all the materials tested. Results indicate that as the fineness increases the densities increase. The dryness of the material when processed has a decided effect on the resulting densities. The ¼" sample of oat straw evidently contained a high percentage of fine material which caused the slight deviation from the general trend.

2. Effect on conduction.

An examination of the above tabulated results indicates that fineness of the material over the ranges used has little or no effect on the conduction.

3. Indicated fineness for best results.

Results indicate the inch cut in all cases, since it shows a low density and a low conduction, is the one to use. Density is the determining factor in determining quality of insulating material, because a low density tends to reduce settling.

B. Relative Conduction Ratings

1. Comparison of materials.

The tabulated list below indicates conduction averages for the various materials tested.

TABLE NO. XII. CONDUCTION AVERAGES

Cut and Material	k
1" Oat Straw	.26
1" Corn Stalks	.25
1" Flax Straw	.27
1/2" Oat Straw	.25
1/2" Oak Leaves	.27
1/2" Corn Stalks	.27
1/2" Flax Straw	.28
1/2" Wild Hay	.26
1/4" Oat Straw	.28
1/4" Corn Stalks	.25
1/4" Oak Leaves	.24
1/4" Wild Hay	.29

2. Indicated relative values.

The results indicate that any of the above listed fibrous materials, when properly shredded, make highly efficient

insulating material. One material appears to be just about as good as the other. The above conduction variations, since they are so slight, may be traced to a variation in the preparation of the specimen and the making of the tests. From the angle of conduction, little or no difference in insulating value is noted.

C. Density and Conduction

1. Apparent range.

An examination of the tabulated data under fineness and density shows that densities may vary over wide ranges with little or no effect on conduction. The range of densities are such that the effect on conduction is a factor of little value.

2. U. S. Bureau of Standards findings.

Tabulated results of tests on granulated cork indicates that conductivities remain quite constant over wide density ranges.

Density and Conductivity (4, P. 62).

Density lbs. cu. ft.	Conduction k
6.9	.25
10.55	.29
10.67	.299
16.17	.315
16.80	.403
18.04	.436
21.85	.444
22.10	.444
27.10	.508
30.17	.758

U. S. Bureau of Standards tests show that conductivity of loose fibrous material is not affected by density over a wide range (7a, P. 974). The tests indicate that fineness of grinding will improve insulating qualities to a certain point called the "Optimum" density. The range of densities in our tests are far above the "Optimum".

D. Moisture Content and Conduction

1. Moisture as a menace.

Tests made on ½" cut flax straw indicate that if this material is allowed to absorb moisture its insulating value will be destroyed in proportion to the amount of water absorbed. Loose fibrous materials derive their insulating efficiency from the relative amount of trapped air, and if water is allowed to displace this air the insulating value of the material will drop in proportion to the amount of air displaced.

Loose, fibrous materials composed of vegetable matter have a great affinity for water, and in most cases are capable of holding from 4 to 6 times their own weight in water. When material is completely saturated its insulating value is destroyed.

TABLE NO. XIII. MOISTURE TESTS

Material, ½" flax straw

Moisture	Density, dry lbs. cu. ft.	Conductivity k
Dry	9.10	.28 dry
1.4 gal. water added to cu. ft.	9.58	.540 wet
3/4 gal. water added to cu. ft.	11.14	.436 wet

The results indicate the detrimental effect of water but not enough tests were run to determine a definite ratio. The table below by Miller (32, P. 235), shows some interesting results relative to moisture content and conductivity. If our experiment had been more extensive, very likely our results would have been similar to Miller's.

Conductivity & Moisture

Tests by Miller

Material	Moisture content % of weight	Conductivity k
Wood fibre	10%	.32
" "	20%	.345
" "	30%	.37
" "	40%	.40
" "	50%	.43
" "	60%	.45
" "	70%	.48
" "	80%	.50
" "	90%	.53
" "	100%	.56
Flax fibre	10%	.34
" "	20%	.36
" "	30%	.38
" "	40%	.395
" "	50%	.415
" "	60%	.435
" "	70%	.45
" "	80%	.47
" "	90%	.49
" "	100%	.51

The above data indicates that insulating material may contain a high percentage of moisture and still retain a high insulating efficiency. The moisture content of dry material is about ten per cent, and it would seem that with proper protection the danger from moisture would not be great.

Absorption of moisture from the atmosphere. No tests were made to determine the amount of moisture absorbed from the air by the various materials under consideration but likely if tests had been made they would conform closely to the tests listed below on wood and cotton.

Moisture Content with Relation to Humidity

in Per Cent of Dry Weight (5, P. 65)

Relative Humidity %	Wood % moisture	Cotton % M	Glass Wool % M
10	3.0	2.5	.10
20	4.4	3.7	.15
30	6.00	4.6	.19
40	7.6	5.5	.22
50	9.3	6.6	.22
60	11.3	7.9	.23
70	13.9	9.5	.25
80	17.8	11.5	.30
90	23.8	14.1	.40

The above figures, when compared with the conductivity moisture chart by Miller indicate that "loose fills" are not apt to lose any great amount of their insulating efficiency due to the absorption of moisture from the atmosphere. Finck found by tests that insulating values are not greatly affected over quite a moisture range (7a, P. 977)

Absorption of water due to contact. Water may penetrate a fibrous material by capillarity, and through the material by vapor and wind pressure. In the case of direct contact the water moves up in the material by capillary action. Some materials have a greater affinity for water than others, and to determine this variation an absorption test was run using ½ inch cut corn stalks, oat straw and oak leaves.

Open ended glass tubes, one inch in diameter and 16 inches long, were filled with samples of the various materials and then supported vertical in a tray of colored water, so that

the bottom of the material came in contact with the water. As soon as the filled tubes were placed in position, the water rose up through the materials rapidly at first and then more slowly until the end of 36 hours there was no further apparent movement. The tubes were allowed to remain in position for a period of five weeks, but during this time there was little further upward movement of water. At the end of this period the indicated water heights in the various materials were as follows; corn stalks 5 3/4 inches, oat straw 3 inches and oak leaves 2¼ inches. An examination of the materials after the test showed little increase in moisture content above the indicated water line.

The results of these tests indicate that water will not travel any great distance by capillarity, and also that there is quite a range in moisture resistance in "loose fill" materials. This test also indicates that if some particular area of a wall became soaked the moisture would not necessarily spread to any great distance. It would seem from the results of these tests that danger to conduction from capillarity is not great. Further tests to determine the relative moisture resistance of various materials would be worth while.

E. Chemical Treatments and Conduction

1. <u>Creosote</u>.

TABLE NO. XIV

Test No.	Density dry	Treatment	Conduction k
		(½ inch corn stalks)	
16	4.46	No treatment	.235
35	4.50	50% solution of gasoline and creosote. Material saturated	.255
		(½ inch oat straw)	
2	7.28	Not treated	.250
42	10.95	Same as 35	.241
		(1 inch flax straw)	
40	10.95	1½ qts. creosote to cubic foot	.265
20	7.73	Not treated	.274
41	5.90	Water-gas-tar-creosote saturated	.332

The same test sample was not used for both the non-treated and treated tests. The results would have been more uniform if such had been the case. However, a study of the tabulated data shows that creosote treated materials do not lose much of their insulating efficiency. The fluctuations in conductivity are slight, and may be caused by the differing densities or other variable characteristics of the test specimens.

2. Carbolineum.

TABLE NO. XV. CARBOLINEUM TREATMENT

Test No.	Density	Treatment	k
		(½ inch cut corn stalks)	
16	4.46	Not treated	.235
36	19.62 treated	Saturated with carbolineum	.329

TABLE NO. XV. (Continued)

Test No.	Density	Treatment	k
37	12.26 treated	2.8 qts. to cu. ft.	.245
38	8.45 treated	1.4 qts. to cu. ft.	.252
		(Planer shavings)	
25	6.85 dry	No treatment	.412
43	6.85 dry	3/4 gal. to cu. ft.	.437

The material in test sample No. 16 was not treated and re-tested. However, the material for the treatment Tests 36, 27 and 38 was selected from the same bulk as the material for Test No. 16. Due to the method of sample selecting and testing, there would be a slight variation in densities which might cause a slight fluctuation in the value of k. The material in Test No. 43 was that used in Test No. 25 with the chemical added. This test gives results involving the same material and the same density. In all the tests it is noted that the carbolineum has had little or no effect on the value of k.

3. "Lotol".

TABLE NO. XVI. "LOTOL" TREATMENT

Test No.	Density	Treatment	k
		(½" cut corn stalks)	
16	4.46	No treatment	.235
34	5.27	"Lotol" treated	.275

"Lotol" is a patented commercial preparation composed principally of rubber. The tests indicate that this chemical can be applied successfully. I think this chemical could be used to advantage, and further tests would be worth while.

4. Used crank case oil.

TABLE NO. XVII. CRANK CASE OIL TREATMENT

Test No.	Density	Treatment	k
		(½" cut flax straw)	
22	9.10	Not treated	.284
39	10.47	2 qts. to cu. ft.	.258

The material used for Test No. 22 was not treated and used for Test No. 39. However, the material used for both tests was taken out of the same sack. The deviation in k very likely was caused by a variation in density. The data indicates that k is not adversely effected by the oil treatment.

5. Indicated effects.

All tests indicate that the various chemicals have had little or no injurious effect on the insulating value of the materials to which they have been applied.

F. Conduction Ratings Compared to Bureau of Standards

1. U. S. Bureau of Standards ratings (1, P. 95; 28, P. 45); 16, P. 30; 5, P. 71).

TABLE NO. XVIII.

Material	Description	Density lbs. cu. ft.	Conduction k
	(Commercial "Loose Fill" Materials)		
Eagle Insulating Wood (Fibrous)		8.00	.27
Balsam Wool (Wood Fiber)		2.2	.27
Cabots Quilt (Eel Grass)		4.6	.26
Dry Zero (Kapok(		1.0	.24
Glass Wool		1.5	.27
Cork (Granulated)		4.8	.32
Diatomaceous Earth (Powder)		10.6	.30
Hairinsul (75% Hair, 25% Jute)		6.3	.27
Linofelt (Flax Fibres)		4.9	.28
Red Top Wool (Glass Wool)		1.5	.27
Rock Wool (Fibrous Material)		10.0	.27
Thermofill (Flaked Gypsum)		26.0	.52
Thermofelt (Jute & Asbestos Fibres)		10.0	.37
Hair Felt (Cattle Hair)		11.0	.26
	(Commercial Board and Felt Insulation)		
Beaver Board (Cane Fibre)		13.8	.33
Celotex (Cane Fibre Board)		13.2	.34
Cork Board (Pure Cork)		14.0	.34
Fibrofelt (Felted Vegetable Fibres)		13.6	.32
Flaxlinum (Felted Flax Fibres)			
Hair Felt (Felted Cattle Hair)		11.0	.26
Isno Board (Wheat Straw Board)		17.0	.33
Insulex (Cellular Gypsum)		18.0	.59
Insulite (Wood Pulp Board)		19.9	.34
Linoboard (Rock Wool and Vegetable fibres)		11.5	.31
Lith (Rock Wool & Flax Straw)		14.3	.40
Maftex - Licorice Root Board)		16.1	.34
Masonite (Wood Fibre Board)		19.8	.33
Maizewood (Cornstalk Board)		15.0	.32
Rock Cork (Rock Wool with Binder)		14.5	.33
Rock Wool (Fibrous Material)		14.0	.28
Temlok (Wood Fibre Board)		15.0	.33
Thermatex (Wood Fibre Board)		8.5	.29
Vitrobestos (Vitrified Air Cell)		29.6	1.08
Wool Felt (Layers of Asbestos Paper)		16.2	.52
	Miscellaneous Materials		
Brick (Common, Machine Made)		131.9	4.55
Concrete (Stone 1-2-4)		150.0	6.27
Gravel (Loose-dry)		115.5	2.57
Sand (River)		94.8	2.26
Wood (White Pine)		31.2	.784

TABLE NO. XVIII. (Continued)

Material	Description	Density lbs.cu.ft.	Conduction k
	(Miscellaneous Materials - Continued)		
Wood (Oak)		38.0	1.01
Aluminum			1050.00
Copper	(Pure)		2547.00
Brass	(Yellow)		738.00
Iron	(Cast)		432.00
Zinc	(Pure)		760.00
Asbestos Paper	(Sheets)	61.2	1.002

2. Test Results.

TABLE NO. XIX. TABULATED DATA SHEETS

Test No.	Description	Density, lbs. cu. ft.	k
	(Oat Straw)		
1	1" cut	5.616	.26
2	½" cut	7.28	.25
3	½" cut	7.89	.31
4.	½" cut, passed over ¼" sieve	5.831	.28
5	¼" cut	10.23	.32
6	Material passing 1/8" sieve	9.23	.31
7	Material passing No. 14 sieve	10.66	.31
42	½" cut, creosote treated	10.95	.265
	(Oak Leaves)		
8	½" cut	6.85	.29
9	¼" cut	11.34	.236
10	½" cut, retained on ¼" sieve	5.57	.240
11	½" cut	9.92	.271
12	¼" cut	13.33	.255
13	Material passing ¼" and retained on 1/8" screen	7.84	.262
	(Corn Stalks)		
14	1" cut	6.03	.259
15	¼" cut	7.58	.265
16	½" cut	4.46	.235
17	½" cut	6.41	.275
18	½" cut, passed over ¼" sieve	6.90	.242
19	¼" cut	7.31	.273

TABLE NO. XIX (Continued)

Test No.	Description	Density, lbs. cu. ft.	k
	(Corn Stalks - Continued)		
34	½" cut, "Lotol" treated	5.27	.275
35	½" cut, creosote treated	4.50	.255
36	½" cut, carbolineum treated	19.62 wet	.329
37	½" cut, carbolineum treated	12.26 wet	.245
38	½" cut, carbolineum treated	8.45 wet	.252
	(Flax Straw)		
20	1" cut	7.73	.274
21	1" cut, passed over ¼" sieve	6.65	.274
22	½" cut	9.10	.284
39	½" cut, creosote treated	10.476	.258
40	1" cut, creosote treated	8.53	.241
41	1" cut, water-gas-creosote	5.90	.332
	(Wild Hay)		
23	¼" cut	9.37	.290
24	½" cut	9.14	.260
	(Planer Shavings & Sawdust)		
25	Commercial shavings	6.85	.412
26	Sawdust	8.83	.444
27	Shavings processed with a hammer mill using 1" cut	11.50	.316
43	Planer shavings, treated with carbolineum	6.85	.437
	(Mixed Straw and Corn Stalks)		
28	¼" cut	6.96	.355
29	¼" cut	9.45	.285
30	¼" cut, through 1/16" sieve	10.30	.270
31	¼" cut, over 1/16" sieve	7.05	.26
	(Virgin Sheeps Wool)		
44	Sheeps Wool, 50% oil	5.26	.245
	(Commercial Insulation Board) Tests made for comparison purposes		
45	½" Insulite Board (used)	16.90	.43
46	½" Nu Wood	17.00	.342
47	½" Temlok	15.00	.325
48	½" Temlok	15.00	.325

Discussion of Data Sheets:

Comparison of the data sheets for home manufactured and commercial "loose fills" reveals that there is very little if any difference in the thermal conductivities of the various materials. The commercial fills in many cases show a lower density, but the thermal conductivity average is about the same for both materials. The lowest thermal conductivity recorded is .23 and that figure is reached in both the home prepared and the commercial fills.

V. OTHER PROBLEMS STUDIED

A. Settling

1. Object of tests.

When insulating vertical wall construction by the loose fill method, the danger of settling becomes a problem that must be taken into consideration. If the entire mass settles uniformly there will be an uninsulated area at the top of the wall, and if side wall friction causes uneven settling there will be uninsulated areas throughout the vertical walls. The reason for conducting settling tests was to determine the extent of the settling dangers and if great, propose a solution.

2. Apparatus

A side wall section, similar in construction to the average wood frame building was constructed, using five 2 x 4's 8 feet long, making four pockets which were sheeted on both sides with shiplap, with the exception of the last pocket which had a glass front to enable the observation of the evenness of settling.

These side wall pockets were numbered and filled with the "loose fill" materials under consideration as follows: Pocket No. 1 packed with ½" cut oat straw; pocket No. 2 filled but not packed with ¼" cut oat straw; pocket No. 3 filled but not packed with ½" cut oak leaves; and pocket No. 4 filled but not packed with ¼" cut corn stalks.

3. Observations.

The settling of the material in the various pockets was observed over a period of one year, during which time the height of the materials was noted monthly and the evenness of settling was observed in the pocket with the glass front.

The test was started October the first, 1934, and completed October the first, 1935.

4. Data.

TABLE NO. XX. SETTLING TEST DATA

Pocket No.		Density wt.cu.ft.	Settling 3M	6M	9M	1 yr.
1	½" Oat Straw, packed	6.96	0	0	0	0
2	¼" Oat Straw, filled but not packed	6.72	3/4"	1"	1"	1"
3	½" Oak Leaves, filled but not packed	8.44	2½"	2 3/4"	3"	3"
4	¼" Corn Stalks, filled but not packed	5.60	3/4"	3/4"	1"	1"

Observations through the front on pocket No. 4 showed no unevenness of settling at any time.

5. Conclusions.

The data obtained indicates that settling is complete by the end of six months.

If the material is rammed into place there will be no settling.

If the side walls of the pockets are reasonably smooth the settling will be even, and there will be no uninsulated areas.

The settling test data indicates that when the thermal conductivity tests were made the material was too tightly pressed into the test block. When the ½" cut oat straw was rammed into the wall sufficiently to prevent settling, its density still remained slightly below the density of the thermal conductivity specimens.

The excessive settling noted with oak leaves was, I think, caused by the extra amount of dirt present in the

leaves. Leaves free from dirt should be in no greater danger from settling than the oat straw or corn stalks.

B. Decay and Dry Rot

1. Danger.

All fibrous materials of vegetable origin are susceptible to decay and "dry rot", and if sufficient moisture is present such deterioration will result (11, P.478).

2. Moisture.

Strictly speaking, there is no such thing as dry rot, because where moisture is not present decay-producing microorganisms will not multiply. It has been proven that decay of wood and similar fibrous material is a chemical process brought about by the dissolving action of certain rot fungi, and this process may vary considerably according to the attacking fungus.

Dr.Hubert (11, P. 265) makes the following statement regarding the action of wood-rot fungi: "The moisture content of wood has a very decided effect upon the activity of wood-inhabiting fungi. For each fungus there appears to be a minimum, and optimum, and a maximum moisture content of wood. Not enough experimental work has been completed to give us exact information regarding the moisture requirement of the different wood-rot fungi. The information available indicates

that decay does not develop in wood having a moisture content below 20 to 30 per cent of the oven dry weight of wood, which is near the fibre saturation point." In private correspondence relative to decay in "loose fills" Dr. Hubert has this to say: "In general, I would say that such materials as you specified will decay rapidly if the moisture content and temperature conditions favor the growth of the decay organisms. Until definite tests are made there is no assurance that ten per cent moisture will not support decay."

Dr. Max Levine (42) in correspondence made the following statement: "With reference to the feasibility of employing dried corn stalks or other fibrous materials as insulators, I do not feel qualified to give an opinion on all of the factors involved, but with reference to the question of deterioration and decay, it is almost axomatic that if the moisture content could be maintained at a very low level, the growth of microorganisms might be discounted. The problem seems to be one primarily of available moisture for support of microbial life."

Dr. J. C. Gilman, Pathologist at the Iowa State College, in correspondence made this statement: "A moisture content of 7% to 10% would ordinarily be sufficiently low to prevent decay, but the material should not be in contact with any surface such as concrete foundations, from which it could absorb moisture. The 'dry rot' fungi can transport their own water for great distances, if they have a source of supply".

As far as we know, no experiments have been conducted to determine how much moisture is necessary to start decay in fibrous materials, but it would seem that a moisture content similar to that required in wood would be the requirement. If the building is properly protected from moisture, no disadvantage from the standpoint of decay should result from the use of untreated sawdust, planer shavings or similar fibrous materials. Of course, until definite tests are made we will have no assurance as to the moisture requirement necessary to start decay in the "loose fills" under consideration.

3. Need of chemical treatment.

Dr. Hubert (40) in correspondence makes the following statement relative to the necessity for chemical treatment: "Materials of this type packed between studdings in walls readily absorb moisture and thus become cumulative over a period of time so that moisture-proofing and decay-proofing are essential".

Philip A. Hayward (39) in correspondence makes the following statement: "To be perfectly frank with you, I believe that you would obtain fairly good results, particularly in poultry houses and other types of structures, by using a fibrous, coarse-grained sawdust, untreated. We have records showing that sawdust has been used in ice houses and it has given excellent results over a period of years."

The above quotations from recognized authorities indicate

that treatment may not be necessary. It would seem, since no definite data is available, to be on the safe side, it might be well to treat "loose fills" providing a satisfactory and reasonably priced chemical can be found.

4. Chemical possibilities:

There are a number of preservatives now on the market which have shown good results in minimizing decay in wood, and it would seem that these would be equally effective when used on any similar fibrous materials. The most commonly accepted in the order of importance are as follows: creosote, zinc chloride, sodium fluoride and mercuric chloride (14). Creosote and zinc chloride represent approximately 98% of the total amount of preservatives used in the U. S. in 1934.

Creosote. Our insulation tests indicate that creosote may be applied to "loose fills" without injuring the insulating value of the material. Since it has proven effective when used on wood, it should prove to be even more effective on "loose fills", because it may be broughtin more intimate contact with the individual fibers. Besides being effective against decay, it also repels insects and rodents (15, P. 9), which makes it highly desirable as a treatment for poultry house insulation fills. Its offensive odor makes it undesirable as a treatment for insulation to be used in the home.

Creosote is very reasonable in price, ranging from about 5 cents per gallon for the water-gas creosote to about 75

cents for the better grades of coal-tar creosotes. Carbolineum is a more highly refined creosote, which has proven highly satisfactory in practice, but the price is higher. Creosote may be diluted with used crank case oil, which will materially reduce the cost, and we think will still prove effective.

The best method of application is to put the material to be treated in an ordinary concrete mixing box, and then apply the hot creosote in the form of a spray while at the same time thoroughly mixing the materials together with a hoe. The material then should be allowed to dry for a short time before using, to allow the creosote to set.

Our tests indicate that 1½ quarts applied to each cubic foot of the insulating material will be sufficient. No tests are available at the present time to indicate the exact amount to use. A good practice would be to apply sufficient hot creosote to coat all particles. The color of the material will indicate when all the particles have been coated.

Zinc Chloride. Our experience with zinc chloride was not highly satisfactory, because the chemical absorbed moisture from the air causing the treated material to remain damp, which reduced its insulating value.

Sodium Fluoride. The treatment of wood with a solution of sodium fluoride has been found highly effective against termites and other chewing insects as well as being effective against rot fungus. Our tests made with this chemical indicate that it is equally effective, when used in sufficient

amount, on the fibrous loose fills (12; 27).

The exact amount of chemical necessary for the proper treatment of "loose fills" has not been determined, but based on past experience in the treatment of wood and the results of our treatment tests (33), it is thought that the following treatment procedure will prove effective:

To each 100 pounds of air dry "loose fill" add 2 or 3 pounds of sodium fluoride. The material to be treated should be put in a regular concrete mixing box, then the sodium fluoride spread over it, and the two materials mixed together by repeated shoveling and stirring. It is thought that a concrete mixer could be used; however, we did not use this method, therefore cannot make a positive statement.

Sodium fluoride is a fine white powder that is very poisonous to human and animal life. It must be strictly understood that care should be taken to avoid breathing or swallowing the dust. Dampening the "loose fill" with water before spreading the fluoride on it should avoid trouble from dust. Since sodium fluoride resembles sugar, table salt and baking soda so closely, it may be taken for them and it is best not to have any left over after the treating job is done. Its cost is 8 to 10 cents per pound.

Another method of application is to make a 4% solution by dissolving the sodium fluoride in hot water and then mix the solution with the material as indicated for the dry state. After the chemical is mixed with the "loose fill" the mixture

should be dried very thoroughly before putting it into the walls of a building.

Mercuric Chloride. Mercuric chloride is effective using the treatment method advised for sodium fluoride, but the highly poisonous character of this chemical to humans and animals always make its use somewhat dangerous (15, P. 8); however, if properly handled there should be no very great hazard attached. Mercuric chloride is also corrosive to metals (13). Sodium fluoride is cheaper in relation to its toxicity, is less dangerous and less corrosive to metals; therefore, more practical from all angles than mercuric chloride. Mercuric chloride costs about $1.40 per pound compared with sodium fluoride at 8 to 10 cents per pound.

C. Fire Hazard

1. Danger.

A wall properly filled with planer shavings or similar fibrous materials such as leaves, or straw should be more fire resistant than a similar hollow wall, for the insulation would prevent drafts up through the walls and would thus retard the spread of flames. A smouldering fire in such a filled wall might be difficult to get at and extinguish but this disadvantage should be more than offset by the very slow rate of burning, which would allow plenty of time for extinguishing.

G. W. Brahmst, Technical Engineer, Associated Factory Mutual Fire Insurance Companies, Boston, Mass., in correspondence makes the following statement: "Such materials as sawdust, oak leaves, and similar materials, even though not fireproofed, will not, in our estimation, when packed in between walls of a building, add to the fire hazard of the building, but will serve to prevent the rapid spread of fire through the walls of the building."

George M. Hunt (41) in correspondence makes the following statement: "A wall filled with planer shavings or similar fibrous materials should be more fire resistant than a similar wall, for the insulation would prevent drafts up through the wall, and thus retard the spread of flames. For this reason preservative treatment of the insulating materials does not seem to be very important. Nevertheless, it is possible by suitable treatment to increase the resistance of these materials to fire."

W. F. Coover (37) in an interview made the following statement: "I think all fireproof chemicals, as far as your problem is concerned, are of little value; to use them is purely a waste of money and time. I would forget that feature of the problem entirely."

Truax (29) gives a list of chemicals that are fire retardant but states that no strictly fire proofing chemical is available at the present time.

2. Treatments.

No experiments were made with fireproofing chemicals, but if conditions warrant the following treatments are suggested.

R. M. Meiklejohn (43) recommends the following formula: "Mono- and diammonium phosphate are used extensively for all flameproofing wood, paper, textiles, straw, etc., and we would suggest you consider treating the fibrous materials you have in mind by spraying with a solution prepared by dissolving 40 pounds each of mono- and diammonium phosphates and 8 pounds of boric acid in 100 gallons of water. It may be possible to add a 4% solution of sodium fluoride to the ammonium phosphates and reduce the treatment to a one spray application which would take care of dry rot." Phosphates can be purchased for about 12 cents per pound and sodium fluoride for about 9 cents per pound.

Geo. M. Hunt, Chemist, Forest Products Laboratory, Madison, Wisconsin, suggested the following: "To 100 pounds of the dry material add 5 pounds of mono-ammonium phosphate and 5 pounds of borax. Mix thoroughly by repeated shoveling. If insect and decay resistance are required add sodium fluoride at the rate of 3 pounds to the mixture."

3. Spontaneous combustion.

Table Showing the Properties of Insulants (5, P. 235).

Material	Combustion Point F°	Spontaneous Comb. Temp. F°
California Cedar	578	680
Red Fir	500	878
Elm	578	572
Cork	572	698
Peat	527	644

It is stated that the majority of fibrous insulators, in particular those made of peat or cork, can burn for a long time in a closed space, on account of the quality of air which they contain in their pores: They will burn without flame and the fire will propagate between the particles without immediate detection. Then, suddenly, in a favorable circumstance, it will blaze. Certain cork products do not burn in the open air, even under the action of a blow pipe, but when closed between walls, if the heat evolved cannot be dissipated, they can very well burn.

The question of spontaneous combustion is always raised when "loose fill" made from fibrous material is considered. Due to the high temperature, it would seem that the danger from spontaneous combustion, in small mass building insulation, would not be very great. If very large masses of these materials were used, which would not be the case in ordinary building insulation, there might be danger of spontaneous combustion. Spontaneous combustion is promoted by the rapid multiplication of bacteria which cause heat and the production of a gas which due to some not exactly known chemical action

causes a rapid oxidation resulting in fire. Treatments which kill these bacteria will prevent any danger of fire from this source. Creosote treatment or sodium fluoride treatment are effective in this respect.

Linseed oil rags will ignite by spontaneous combustion due to a peculiar chemical composition when exposed, but rags mixed in lubricating oil are in no danger from this chemical phenomenon. Crank case oil and similar products will prevent but not cause spontaneous combustion.

D. Insects, Rats and Mice

From a consideration of the character of the loose fills and the habits of mice, rats and insects, it seems improbable that a wall well packed with such fills would prove more attractive than hollow walls to any of these pests. Termites could build their runways through such insulated walls and use the "loose fills" for food but they undoubtedly prefer solid food. The presence of the insulation in the walls should be of no advantage to them. It does not seem probable that these "loose fills" would offer any attraction to bed bugs, cockroaches, silver fish, ants, or other household insects or provide any more favorable conditions for them than are provided by hollow walls.

Termites, especially in the southern section of the United States, are a serious menace to all wood construction because

wood is their main food (27, P. 10-11). In that section wood that is subject to attack by these pests is being treated. Creosote and sodium fluoride are both used effectively to combat the ravages of these pests; therefore, if the "loose fills" also serve as a harbor and food for these insects the above treatments could be used effectively. Loose fills for farm buildings could be treated with creosote and for homes the sodium fluoride treatment should be used.

When there is danger that insects, rats and mice will use these fills as a harbor, as might be the case in poultry houses, this danger can be effectively eliminated by using the creosote treatment.

In the home it would not be desirable to use the creosote treatment but it would seem that the sodium fluoride that is effective against dry rot might also prove effective in the matter of harbor. We conducted no experiments and do not know definitely of any method that has been successfully used to avert this trouble. However, there are several substances which should be practical in repelling rats and mice from such situations. Probably either lime or powdered sulphur mixed with the "loose fills" as they are being put into the walls would be of value. We believe that no other treatment than the sodium fluoride is necessary for home and this is used mainly to guard against the danger of "dry rot" and termites.

VI. CONCLUSIONS

1. Agricultural wastes such as leaves, straw, corn stalks and similar fibrous material can, by proper processing, be converted into first-class "loose fill" insulating materials as evident from the thermal conductivity tests.

2. Tests indicate that efficient processing can be done on the farm by using an ordinary hammer mill. Results indicate that when processing with the hammer mill, it is best to use the inch cut.

3. Tests indicate that "loose fills" can be treated with creosote, crank case oil or carbolineum without appreciably lowering the insulating value of the material.

4. Tests indicate that deterioration by decay and "dry rot" can be reduced below the danger point if the "loose fill" is treated with either creosote or sodium fluoride. Both chemicals are reasonable in price and the treating process is simple.

5. "Loose fills" can be used without serious danger from settling as revealed by the settling tests. To lessen settling, especially in a side wall construction, the materials should be packed into place.

VII. LITERATURE CITATIONS

1. American Society of Heating and Ventilating Engineers, 51 Madison Ave., New York. Guide, 1935.

4. American Society of Refrigerating Engineers, 35 Warren St., New York. Heat transmission of insulating materials. Report of Insulating Committee (1922).

5. _____. Refrigerating data book, 1934-36.

6. Bakke, A. L. and Hoecker, N. L. The relation of moisture to respiration and heating in stored oats. Iowa Agr. Exp. Sta. Res. Bul. 165. 1933.

7. Celotex Company. The Ferox process (Insulation preservative). Technical Note No. 42, published by the National Celotex Co., Chicago, Illinois.

7a. Finck, J. L. Mechanism of heat flow in fibrous materials. U. S. Bureau of Standards, Journal of Research. 5:973-984. 1930.

8. Greig, A. R. Wall insulation. Univ. of Sask., Canada, Col. of Engr. Bul. No. 1. 1924.

9. Gilman, Joseph C. and Barron, D. H. Effect of molds on temperature of stored grains. Plant Physiology, 5:565-76. 1930.

9a. Nicholls, Percy. Practical application of the heat flow meter. Trans. Amer. Soc. Heating and Ventilating Engineers. 30:289-300. 1924.

9b. Houghten, F. C. and Carl Gutherlet. Conductivity of concrete. Trans. Amer. Soc. Heating and Ventilating Engineers. 38:47. 1932.

10. Hubert, Ernest. The protection of jointed wood products against decay and stain. Univ. of Idaho, School of Forestry Bul. No. 4. 1934.

11. _____. An outline of forest pathology. John Wiley & Sons, New York. 1931.

12. Hunt, Geo. M. The preservative treatment of farm timbers. U. S. Dept. Agr. Farmers' Bul. 744. 1928.

13. _____. Wood preservatives. U. S. Forest Products Lab., Madison, Wis. Pamphlet. 1933.

14. _____. Factors that influence the decay of untreated wood in service. U. S. Forest Products Lab., Madison, Wis. Pamphlet. 1933.

15. Hadley, F. B. and McCulloch, E. C. Disinfectants and disinfection. Wis. Agr. Exp. Sta. Cir. 256. 1933.

16. International Insulation Company. Universal insulite. International Insulite Co., Minneapolis, Minn.

17. Johns-Manville Company. It saves, it builds and insulates. Johns-Manville Co., New York. 1929.

18. Knowlton, A. A. Physics for college students. McGraw-Hill Book Co., New York. 1935.

19. Kreer, John G. Arsenic compounds in wood preservation to protect against termites and decay. Leaflet. American Lumber and Treating Co., Chicago, Ill.

20. Mendenhall, C. E., Eve, H. S., and Keys, D. A. College physics. D. C. Heath Co., New York. 1935.

21. National Gypsum Company. Maftex insulation manual. National Gypsum Co., Chicago, Ill. 1928.

23. Poynting, J. H. and Thompson, S. S. A textbook of physics. Charles Griffin & Co., London, England. 1928.

24. Pittsburgh Testing Laboratory, Pittsburg, Pa. Investigation of Wolman Salts as a wood preservative treatment for protection against decay and termites. Report prepared for American Lumber and Treating Corporation. Available, American Lumber and Treating Corporation, Chicago, Ill.

25. Rowley, Frank B. and Algren, Alex B. Heat transmission through building materials. Univ. of Minn. Engr. Exp. Sta. Bul. No. 8. 1932.

26. Slocum, James. Farm fire prevention. James Slocum, 2970 W. Grand Blvd., Detroit, Mich. Quarterly Bulletin. 1934.

27. Snyder, Thos. E. Preventing damage by termites or white ants. U. S. Dept. Agr. Farmers' Bul. No. 1472. 1930.

28. The Eagle-Pitcher Lead Company. Effective heat insulation. Insulation Manual. Eagle-Pitcher Lead Co., Cincinnati, Ohio. 1935.

29. Truax, T. R. The "fireproofing" of wood. Published address. National Fire Protection Association, Boston, Mass. 1931.

30. U. S. Department of Commerce. Insulation on the farm. Supt. of Documents, Washington, D. C. 1933.

31. U. S. Forest Products Laboratory. Publications on wood preservation. List of available publications. U. S. Forest Products Lab., Madison, Wis.

32. Willard, A. C. and Lichty, C. L. A study of the heat transmission of building materials. Univ. of Ill. Engr. Exp. Sta. Bul. No. 102. 1917.

33. Wirka, R. M. Preservation of timber by the steeping process. Pamphlet. U. S. Forest Products Lab., Madison, Wis. 1933.

34. Woods, Baldwin M. and Raber, Benedict F. Air conditioning for California homes. Calif. Agr. Exp. Sta. Bul. No. 589. 1935.

35. Wolman, Dr. Karl Heinrich and Pflug, Dr. Hans. Improvement in wood preservation with water soluble salts. Leaflet. American Lumber & Treating Co., Chicago, Ill.

Authorities Consulted Through Correspondence
or Personal Interview

36. Brahmst, G. W. Technical Engineer, Associated Factory Mutual Fires Insurance Companies, Boston, Mass.

37. Coover, W. F. Head of Chemistry, Iowa State College, Ames, Ia.

38. Gilman, Dr. J. C. Professor of Botany, Iowa State College, Ames, Ia.

39. Hayward, Philip A. Chief Forest Products Division, U. S. Dept. of Commerce, 825 Louderman Bldg., St. Louis, Mo.

40. Hubert, Ernest E. Professor of Forestry, Univ. of Idaho, Boise, Idaho.

41. Hunt, Geo. M. In charge, Section of Wood Preservation, Forest Products Lab., Madison, Wis.

42. Levine, Dr. Max. Bacteriologist, Iowa State College, Ames, Ia.

43. Meiklejohn, R. M. Mgr. Special Products Division, General Chemical Co., New York City.

VIII. ACKNOWLEDGMENTS

Appreciation is duly expressed for suggestions and help offered by Dr. J. B. Davidson, Professor and Head of Agricultural Engineering, who served as my chief adviser and counselor. Acknowledgments are also due the following for special assistance: Henry Giese, Professor of Agricultural Engineering; E. G. McKibben, Professor of Agricultural Engineering; H. J. Barre, Research Agricultural Engineer; Dr. Frank E. Brown, Professor of Chemistry; and Dr. Harold Stiles, Professor of Physics.

IX. VITA

My father and mother came from England when still in their teens. By profession, my father was a blacksmith, carriage and wagon worker.

I was born in Little River, Kansas, August 12th, 1883. I graduated from the Little River High School in 1901 and from the Kansas State College in 1909 with the degree of Bachelor of Science in Mechanical Engineering. I have taught school continually, either in high school or college, since graduation. For the past nineteen years I have served as director of Industrial Arts and director and instructor in Agricultural Engineering at the State Teachers College, River Falls, Wisconsin.

died February 1950
H.G.

X. APPENDIX

(Individual Laboratory Test Sheets)

(See thesis copies, Iowa State College Library)