Munchkin
Gas-Fired Boiler

INSTALLATION

START-UP

MAINTENANCE

PARTS

Models
T50M / T80M
80M / 140M / 199M / 399M

Heat Exchanger Bears the "ASME" Stamp

CAUTION
When installing models manufactured after July 7, 2008, you will notice additional selections on the control installer menu that will not apply to this unit. DO NOT CHANGE THESE FACTORY SETTINGS. Refer to the Control Program Reference Chart within this manual for selections that apply to this model.

⚠ **DANGER**
This manual must be used by a qualified installer/service technician. Read all instructions in this manual before installing. Perform steps in the given order. Failure to comply could result in substantial property damage, severe personal injury, or death.

NOTICE: *HTP reserves the right to make product changes or updates without notice and will not be held liable for typographical errors in literature.*

NOTE TO CONSUMER: PLEASE KEEP ALL INSTRUCTIONS FOR FUTURE REFERENCE.

272 Duchaine Blvd. New Bedford, MA 02745 www.htproducts.com
LP-185 Rev. 4.30.19

⚠ WARNING

IF THE INFORMATION IN THIS MANUAL IS NOT FOLLOWED EXACTLY, A FIRE OR EXPLOSION MAY RESULT, CAUSING PROPERTY DAMAGE, PERSONAL INJURY, OR LOSS OF LIFE. DO NOT STORE GASOLINE OR OTHER FLAMMABLE VAPORS AND LIQUIDS IN THE VICINITY OF THIS OR ANY OTHER BOILER.

WHAT TO DO IF YOU SMELL GAS

- Do not try to light any appliance.
- Do not touch any electrical switch.
- Do not use any phone in your building.
- Immediately call your gas supplier from a neighbor's phone. Follow the gas supplier's instructions.
- If you cannot reach your gas supplier, call the fire department. Installation and service must be provided by a qualified installer, service agency, or the gas supplier.

FOR YOUR SAFETY READ BEFORE OPERATING

WARNING: If you do not follow these instructions exactly, a fire or explosion may result, causing property damage, personal injury or loss of life.

A. This appliance does not have a pilot. It is equipped with an ignition device which automatically lights the burner. Do not try to light the burner by hand.

B. BEFORE OPERATING smell all around the appliance area for gas. Be sure to smell next to the floor because some gas is heavier than air and will settle on the floor.

WHAT TO DO IF YOU SMELL GAS

- **Do not try to light any appliance**
- **Do not touch any electric switch; do not use any phone in your building**
- **Immediately call your gas supplier from a neighbor's phone. Follow the gas suppliers' instructions.**
- **If you cannot reach your gas supplier, call the fire department.**

C. Use only your hand to turn the gas control knob. Never use tools. If the handle will not turn by hand, don't try to repair it, call a qualified service technician. Force or attempted repair may result in a fire or explosion.

D. Do not use this appliance if any part has been under water. Immediately call a qualified service technician to inspect the appliance and to replace any part of the control system and any gas control which has been under water.

OPERATING INSTRUCTIONS

1. **STOP! Read the safety information above.**
2. **Set the thermostat to lowest setting.**
3. **Turn off all electric power to the appliance.**
4. **This appliance is equipped with an ignition device which automatically lights the burner. Do not try to light the burner by hand.**

GAS VALVE ON

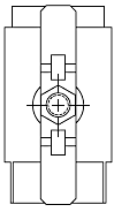

GAS VALVE OFF

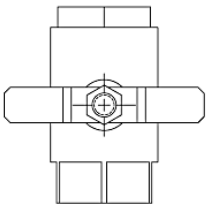

5. **Remove front cover.**
6. **Turn gas shutoff valve to "off". Handle will be across the piping, do not force.**
7. **Wait five (5) minutes to clear out any gas. If you then smell gas, STOP! Follow "B" in the safety information above on this label. If you don't smell gas, go to next step.**
8. **Turn gas shutoff valve to "on". Handle will be in line with piping.**
9. **Install Front Cover.**
10. **Turn on all electric power to appliance.**
11. **Set thermostat to desired setting.**
12. **If the appliance will not operate, follow the instructions "To Turn Off Gas To Appliance" and call your service technician or gas supplier.**

TO TURN OFF GAS TO APPLIANCE

1. **Set the thermostat to lowest setting.**
2. **Turn off all electric power to the appliance if service is to be performed.**
3. **Remove Front Cover.**
4. **Turn gas shutoff valve to "off". Handle will be across the piping. Do not force.**
5. **Install Front Cover.**

LP-175 Rev. 4 3-11-08

SPECIAL ATTENTION BOXES

The following defined terms are used throughout this manual to bring attention to the presence of hazards of various risk levels, or to important product information.

⚠ DANGER

DANGER indicates an imminently hazardous situation which, if not avoided, will result in death or serious injury.

⚠ WARNING

WARNING indicates a potentially hazardous situation which, if not avoided, could result in death or serious injury.

⚠ CAUTION

CAUTION indicates a potentially hazardous situation which, if not avoided, may result in minor or moderate injury.

CAUTION

CAUTION used without the safety alert symbol indicates a potentially hazardous situation which, if not avoided, may result in property damage.

FOREWORD

This manual is intended to be used in conjunction with other literature provided with the MC Series Gas-Fired Boiler. This includes all related control information. It is important that this manual, all other documents included with this system, and additional publications including the National Fuel Gas Code, ANSI Z223.1-2002, be reviewed in their entirety before beginning any work.

Installation should be made in accordance with the regulations of the Authority Having Jurisdiction, local code authorities, and utility companies which pertain to this type of water heating equipment.

Authority Having Jurisdiction (AHJ) – The Authority Having Jurisdiction may be a federal, state, local government, or individual such as a fire chief, fire marshal, chief of a fire prevention bureau, labor department or health department, building official or electrical inspector, or *others having statutory authority*. In some circumstances, the property owner or his/her agent assumes the role, and at government installations, the commanding officer or departmental official may be the AHJ.

NOTE: HTP, Inc. reserves the right to modify product technical specifications and components without prior notice.

FOR THE INSTALLER

⚠ DANGER

This manual must only be used by a qualified heating installer/service technician. Read all instructions in this manual before installing. Perform steps in the order given. Failure to comply could result in severe personal injury, death or substantial property damage.

This boiler must be installed by qualified and licensed personnel. The installer should be guided by the instructions furnished with the boiler, and with local codes and utility company requirements. In the absence of local codes, preference should be given to the National Fuel Gas Code, ANSI Z223.1 – latest edition.

INSTALLATIONS MUST COMPLY WITH:
Local, state, provincial, and national codes, laws, regulations and ordinances.

The latest version of the National Fuel Gas Code, ANSI Z223.1, from American Gas Association Laboratories, 8501 East Pleasant Valley Road, Cleveland, OH 44131.

In Canada – CGA No. B149 (latest version), from Canadian Gas Association Laboratories, 55 Scarsdale Road, Don Mills, Ontario, Canada M3B 2R3. Also, Canadian Electrical Code C 22.1, from Canadian Standards Association, 5060 Spectrum Way, Suite 100, Mississauga, Ontario, Canada L4W 5N6.

Code for the installation of Heat Producing Appliances (latest version), from American Insurance Association, 85 John Street, New York, NY 11038.

The latest version of the National Electrical Code, NFPA No. 70.

NOTE: The gas manifold and controls met safe lighting and other performance criteria when undergoing tests specified in ANSI Z21.10.3 – latest edition.

⚠ WARNING

The hydronic supply and return connections of these products are for installation in closed loop systems ONLY! Use of this product in any manner other than described in this manual may result in premature product failure, substantial property damage, severe personal injury, or death. Damage or failure of this product (or the system in which it is installed) due to unauthorized use **IS NOT COVERED BY WARRANTY**.

IMPORTANT
In accordance with Section 325 (f) (3) of the Energy Policy and Conservation Act, HTP, Inc. has provided this boiler with multiple features designed to save energy by reducing the boiler water temperature as heating load decreases.
These features include:

- **A modulating combustion system that adjusts firing rate based on heat demand.**
- **Adjustment of boiler set point based on inferred heat load as determined by an outdoor sensor. The outdoor sensor is supplied by HTP, Inc. with this boiler.**
- **This boiler does not include a standing pilot.**
- **This boiler is designed and shipped to assure the highest efficiency operation possible. Such high efficiency is achieved by limiting heating circuit water temperature to 140°F when there is no anticipated heat load, based upon the outdoor sensor and the Outdoor Reset Curve (sensor response curve) in the boiler software.**
- **This feature may be over-ridden as described below in specific installations:**
- **The boiler control is equipped with an outdoor sensor override for use with building management systems or in cascaded systems (for systems with total input of 300,000 BTU/hr or greater).**
  See statement below for an important notice on the use of the override.

IMPORTANT
In accordance with Section 325 (f) (3) of the Energy Policy and Conservation Act, this boiler is equipped with a feature that saves energy by reducing the boiler water temperature as the heating load decreases. This feature is equipped with an override which is provided primarily to permit the use of an external energy management system that serves the same function. THIS OVERRIDE MUST NOT BE USED UNLESS AT LEAST ONE OF THE FOLLOWING CONDITIONS IS TRUE:

- **An external energy management system is installed that reduces the boiler water temperature as the heating load decreases.**
- **This boiler is not used for space heating.**
- **This boiler is part of a modular or multiple boiler system having a total input of 300,000 BTU/hr or greater.**
- **This boiler is equipped with a tankless coil.**

TABLE OF CONTENTS

PART 1 – GENERAL SAFETY INFORMATION 7
A. PRECAUTIONS 7
B. IMPROPER COMBUSTION 7
C. GAS 7
D. WHEN SERVICING THE BOILER 7
E. BOILER SYSTEM 7
F. WATER CHEMISTRY* 8
G. WINTERIZING 8
PART 2 – BEFORE YOU START 8
A. WHAT'S IN THE BOX 8
B. HOW THE BOILER OPERATES 9
C. OPTIONAL EQUIPMENT 10
PART 3 – PREPARE BOILER LOCATION 10
A. BEFORE LOCATING THE BOILER 10

B. LEVELING 14
C. CLEARANCES FOR SERVICE ACCESS 15
D. RESIDENTIAL GARAGE, CLOSET, AND ALCOVE INSTALLATIONS 15
E. EXHAUST VENT AND INTAKE PIPE 15
F. PREVENT COMBUSTION AIR CONTAMINATION 16
G. REMOVING AN EXISTING BOILER FROM AN EXISTING COMMON VENT SYSTEM 16
PART 4 – PREPARE BOILER 17
A. REMOVE BOILER FROM PACKAGING 17
B. WALL MOUNTING CONSIDERATIONS 17
C. WALL MOUNTING INSTRUCTIONS 17
PART 5 – BOILER PIPING 18
A. GENERAL PIPING INFORMATION 18
B. RELIEF VALVE 19
C. SEPARATE LOW WATER CUTOFF 19
D. BACKFLOW PREVENTER 20
E. SYSTEM WATER PIPING METHODS 20
F. CIRCULATORS 20
G. HYDRONIC PIPING WITH CIRCULATORS, ZONE VALVES, AND MULTIPLE BOILERS 20
H. CIRCULATOR SIZING 21
I. ZONING WITH ZONE VALVES 23
J. ZONING WITH CIRCULATORS 23
K. MULTIPLE BOILERS 23
L. FILL AND PURGE HEATING SYSTEM 23
M. PIPING DETAILS 24
PART 6 – PIPING WITH OPTIONAL VISION 1 SYSTEM 31
A. VISION 1 SYSTEM PIPING 31
B. ZONING WITH ZONE VALVES USING VISION 1 31
C. ZONING WITH CIRCULATORS USING VISION 1 31
D. PIPING DETAILS WITH THE VISION 1 SYSTEM 32
PART 7 – VENTING, COMBUSTION AIR, AND CONDENSATE REMOVAL 42
A. GENERAL 42
B. APPROVED MATERIALS FOR EXHAUST VENT AND INTAKE PIPE 42
C. REQUIREMENTS FOR INSTALLATION IN CANADA 43
D. EXHAUST VENT AND INTAKE PIPE LOCATION 43
1. DETERMINE EXHAUST VENT LOCATION 43
2. DETERMINE INTAKE PIPE LOCATION 44
E. EXHAUST VENT AND INTAKE PIPE SIZING 45
G. LONGER VENT RUNS 45
H. EXHAUST VENT AND INTAKE PIPE INSTALLATION 46
I. DIAGRAMS FOR SIDEWALL VENTING 48
J. DIAGRAMS FOR VERTICAL VENTING 50

PART 8 – GAS PIPING **51**
A. GAS CONNECTION 51
B. GAS PIPING 52
C. CHECK INLET GAS PRESSURE 52
D. GAS VALVE 53
PART 9 – FIELD WIRING **54**
A. INSTALLATION MUST COMPLY WITH: 54
B. FIELD WIRING 54
C. LINE VOLTAGE WIRING 54
D. THERMOSTAT 54
PART 10 – FIELD WIRING – VISION 1 OPTION **57**
PART 11 – START-UP PREPARATION **58**
A. CHECK/CONTROL WATER CHEMISTRY 58
B. FREEZE PROTECTION (WHEN USED) 59
C. FILL AND TEST WATER SYSTEM 59
D. PURGE AIR FROM WATER SYSTEM 59
E. CHECK FOR GAS LEAKS 60
F. CHECK THERMOSTAT CIRCUIT(S) 60
G. CHECK CONDENSATE REMOVAL 60
H. FINAL CHECKS BEFORE STARTING BOILER 60
PART 12 – START-UP PROCEDURE **61**
A. OPERATING INSTRUCTIONS 61
B. ADJUSTING THE SET POINT 61
C. STATUS MENU 62
D. TEST MODE 62
PART 13 – START-UP PROCEDURES WITH VISION 1 OPTION **63**
A. PROGRAMMING THE VISION I OPTION 63
B. VISION 1 PROGRAM ACCESS 63
C. VISION 1 PROGRAM NAVIGATION 63
PART 14 – TROUBLESHOOTING **65**
A. ERROR CODE 65
B. BOILER ERROR 65
C. BOILER FAULT 65
PART 15 – MAINTENANCE **68**
A. MAINTENANCE PROCEDURES 68
B. MAINTENANCE SCHEDULE FOR THE SERVICE TECHNICIAN 68
C. COMBUSTION CHAMBER COIL CLEANING INSTRUCTIONS 69
BOILER START-UP REPORT **76**
MAINTENANCE REPORT **77**
MAINTENANCE NOTES 80
HTP CUSTOMER INSTALLATION RECORD FORM 81

PART 1 – GENERAL SAFETY INFORMATION

A. PRECAUTIONS

This boiler is for indoor installations only. Clearance to combustible materials: 0" top, bottom, sides and back. Front must have room for service, 24" recommended. (A combustible door or removable panel is acceptable front clearance.) This boiler has been approved for closet installation. Do not install this boiler directly on carpeting. Category IV vent systems only.

⚠ WARNING

INSTALLER – Read all instructions in this manual before installing. Perform steps in the order given.

USER – This manual is for use only by a qualified heating installer/service technician. Refer to user's information manual for your reference. Have this boiler serviced/inspected by a qualified service technician annually.

FAILURE TO ADHERE TO THE GUIDELINES ON THIS PAGE AND HAVE THIS BOILER SERVICED/INSPECTED ANNUALLY CAN RESULT IN SUBSTANTIAL PROPERTY DAMAGE, SEVERE PERSONAL INJURY, OR DEATH.

NOTE: When inquiring about service or troubleshooting, reference the model and serial numbers from the boiler rating label.

⚠ WARNING

DO NOT USE THIS BOILER IF ANY PART HAS BEEN SUBMERGED IN WATER. Immediately call a qualified service technician. The boiler MUST BE replaced if it has been submerged. Attempting to operate a boiler that has been submerged could create numerous harmful conditions, such as a potential gas leakage causing a fire and/or explosion, or the release of mold, bacteria, or other harmful particulates into the air. Operating a previously submerged boiler could result in property damage, severe personal injury, or death.

NOTE: Boiler damage due to flood or submersion is considered an Act of God, and IS NOT covered under product warranty.

⚠ WARNING

Be sure to disconnect electrical power before opening boiler cabinet or performing service. Failure to do so could result in an electrical shock that could result in property damage, serious personal injury, or death.

NOTE: If the boiler is exposed to the following, do not operate until all corrective steps have been made by a qualified serviceman:

1. FIRE
2. DAMAGE
3. WATER

Any claims for damage or shortage in shipment must be filed immediately against the transportation company by the consignee.

CAUTION

Due to the low water content of the boiler, improper sizing of the boiler with regard to heating system load will result in excessive cycling and accelerated component failure. HTP **DOES NOT** warrant failures caused by improperly sized boiler applications. **DO NOT** oversize the boiler to the system. Modular boiler installations greatly reduce the likelihood of boiler oversizing.

B. IMPROPER COMBUSTION

CAUTION

Do not obstruct combustion and ventilating air flow. Adequate air must be provided for safe operation. Failure to keep the exhaust vent and intake pipe clear of ice, snow, or other debris could result in property damage, serious personal injury, or death.

C. GAS

Should overheating or gas supply fail to shut off, do not turn off or disconnect electrical supply to circulator. Instead, shut off the gas supply at a location external to the boiler.

D. WHEN SERVICING THE BOILER

- To avoid electric shock, disconnect electrical supply before performing maintenance.
- To avoid severe burns, allow boiler to cool.

E. BOILER SYSTEM

- Do not use petroleum-based cleaning or sealing compounds in a boiler system. Gaskets and seals in the system may be damaged. This can result in substantial property damage.

- Do not use “homemade cures” or “patent medicines”. Substantial property damage, damage to boiler, and/or serious personal injury may result.
- Continual fresh make-up water will reduce boiler life. Mineral buildup reduces heat transfer, overheats the stainless steel heat exchanger, and causes failure. Addition of oxygen by make-up water can cause internal corrosion in system components. Leaks in the boiler or piping must be repaired at once.
- If you have an old system with cast iron radiators, thoroughly flush the system (without boiler connected) to remove sediment. The high-efficiency heat exchanger can be damaged by build-up or corrosion due to sediment.

NOTE: Damages resulting from incorrect installation or from use of products not approved by HTP, Inc. ARE NOT covered by warranty.

F. WATER CHEMISTRY*

- Sodium less than 20mGL.
- Water pH between 6.0 and 8.0
  - Maintain water pH between 6.0 and 8.0. Check with litmus paper or have it chemically analyzed by water treatment company.
  - If the pH differs from above, consult local water treatment company for treatment needed.
- Hardness less than 7 grains
  - Consult local water treatment companies for unusually hard water areas (above 7 grains hardness).
- Chlorine concentration less than 100 ppm
  - Using chlorinated fresh water should be acceptable as levels are typically less than 5 ppm.
  - Do not connect the boiler to directly heat swimming pool or spa water.
  - Do not fill boiler or operate with water containing chlorine in excess of 100 ppm.
- ***NOTE:** It is recommended to clean heat exchanger at least once a year to prevent lime scale buildup. To clean the heat exchanger, follow the maintenance procedure in Part 15, Section B of this manual.

Hardness: 7 grains
Chloride levels: 100 ppm
pH levels: 6-8
TDS: 2000 ppm
Sodium: 20 mGL

G. WINTERIZING

CAUTION
NEVER use any toxic chemical, including automotive, standard glycol antifreeze, or ethylene glycol made for hydronic (non-potable) systems. These chemicals can attack gaskets and seals in boilers, are poisonous if consumed, and can cause injury or death.

CAUTION
Consider piping and installation when determining boiler location.

To winterize the boiler, drain the entire system. Then apply air pressure to the drain valve and allow air and water to escape from the purge valve (see piping instructions).

Once you have evacuated as much water as possible, pump non-toxic, NSF food grade propylene glycol, FDA rated as GRAS (Generally Recognized As Safe), into the system. Consult the glycol manufacturer for specific instructions on concentration percentage as well as freeze and burst protection methods. Check the volume and concentration of antifreeze to assure protection is adequate to protect the entire system from freezing. When pumping, allow air and remaining water to escape from purge valve. When the stream coming out of the purge valve matches the color of the non-toxic glycol, the system is adequately filled.

Finally, it is recommended to start the circulation pump and allow the system to circulate for at 30 minutes to completely blend any trapped water that might be in the system with the glycol.

PART 2 – BEFORE YOU START

A. WHAT’S IN THE BOX

Also included with the boiler:

- Temperature and Pressure Relief Valve
- Pressure and Temperature Gauge
- Intake PVC Tee with Screens
- Exhaust PVC Coupling with Screens
- Installation Manual

- Warranty

B. HOW THE BOILER OPERATES

Modulation Condensing Technology is an intelligent system that delivers highly efficient hydronic heating, while maximizing efficiency by measuring the data parameters of your system.

Stainless Steel Heat Exchanger
The highly efficient and durable stainless steel heat exchanger is designed to extract the last bit of energy from flue gas before it is exhausted.

Modulating Combustion System
Modulation during operation is based on supply temperature and desired temperature set point. The set point used for the control depends upon the programmed central heating curve. The heating curve slope can be changed by the installer to better fit system needs. The control monitors the system to regulate burner output during operation to match system demand. This increase in efficiency allows for substantial fuel savings.

Gas Valve
The gas valve senses suction from the blower, allowing gas to flow only if the gas valve is energized and combustion air is flowing.

Supply Water Temperature Sensor
This sensor monitors boiler output water temperature (system outlet/supply). The control module adjusts the boiler firing rate so the outlet/supply temperature is correct.

Return Water Temperature Sensor
This sensor monitors the return water temperature (system inlet/return). The control module reduces or increases boiler input, depending on how close the inlet/return water temperature is to the outlet water temperature.

Temperature and Pressure Gauge
Allows the user to monitor system temperature and pressure.

Control
The integrated control system monitors inlet/return and outlet/supply water temperature and regulates fan speed to regulate the unit's BTU output. This allows the unit to deliver the required amount of heated energy and nothing more.

Burner
Constructed of high grade stainless steel, the burner uses pre-mixed air and gas and provides a wide range of firing rates.

Electrical Field Connections with Terminal Strips
The electrical cover plate allows access to the line voltage and low voltage terminal strips. Attach line voltage conduits to the three holes at the right of the line voltage terminal strip for power, CH pump and DHW pump. Route low voltage wires through the opening to the left of the low voltage terminal strip (see Field Wiring Instructions, Part 9).

Condensate Drain Connection
As this is a condensing high efficiency appliance, the unit has a condensate removal system. Condensate is nothing more than water vapor, derived from combustion products and similar to an automobile when it is initially started. It is very important that the condensate line slopes away from the boiler and down to a suitable inside drain.

If the condensate outlet on the boiler is lower than the drain, you must use a condensate removal pump (kit p/n 554200 available from HTP.) In addition, local authorities may require a condensate neutralizer to neutralize the condensate. Condensate neutralizers are made up of lime crystals, marble or phosphate chips. Neutralizers can be purchased from HTP (p/n 7450P-218).

It is also very important not to expose the condensate line to freezing temperatures or any type of blockage. Plastic tubing must be the only material used for the condensate line. Steel, brass, copper or other materials will be subject to corrosion or deterioration. A second vent may be necessary to prevent condensate line vacuum lock on a long horizontal run. Also, an increase in pipe size may be necessary to allow condensate to drain properly. Support of the condensation line may be necessary to avoid blockage of the condensate flow.

Spark Ignition
The burner flame is ignited by applying a high voltage to the system spark electrode. This causes a spark from electrode to ground.

The Vision 1 Optional System
By controlling the temperature delivered to the central heating circuits based on outside temperature, the Vision 1 System allows the installer to take this highly efficient boiler and make it even more efficient. The Vision 1 System is a two temperature system, using one temperature for central heating and the other for use with an indirect water heater. This allows the user to increase the temperature supplied to the indirect water heater to get a faster recovery by prioritizing the flow at a higher temperature than may be needed for the

central heating circuits (this requires two separate circulators). You must follow the piping, wiring, and programming instructions located in the Vision One section of this manual.

C. OPTIONAL EQUIPMENT

Below is a list of optional equipment available from HTP:

- Indirect Tank Sensor (Part # 7250P-325)
- Outdoor sensor (Part # 7250P-319)
- 2” Stainless Steel Outside Termination Vent Kit (V500)
- 3” Stainless Steel Outside Termination Vent Kit (V1000)
- 2” PVC Concentric Vent Kit (Part # KGAVT0501CVT)
- 3" PVC Concentric Vent Kit (Part # KGAVT0601CVT)
- 3” Polypro Vent Kit (Part # 8400P-001)
- 3” Polypro Pipe (33’ length Part # 8400P-002, 49.5’ length Part # 8400P-003)
- U.L. 353 Compliant Low Water Cut-Off Interface Kit with Manual Reset (Part # 7450P-225)
- Alarm System (Part # 7350P-602) (to monitor any failure)
- Condensate Pump (Part # 554200)
- Condensate Neutralizer (Part # 7450P-218)
- Vision 1 Outdoor Sensing System (Part # 7250P-622)

These additional options may be purchased through your HTP distributor.

PART 3 – PREPARE BOILER LOCATION

CAUTION

Carefully consider installation when determining boiler location. Please read the entire manual before attempting installation. Failure to properly take factors such as boiler venting, piping, condensate removal, and wiring into account before installation could result in wasted time, money, and possible property damage and personal injury.

A. BEFORE LOCATING THE BOILER

⚠ WARNING

Incorrect ambient conditions can lead to damage to the heating system and put safe operation at risk. Ensure that the boiler installation location adheres to the information included in this manual. Failure to do so could result in property damage, serious personal injury, or death.

CAUTION

Failure of boiler or components due to incorrect operating conditions IS NOT covered by product warranty.

1. Installation Area (Mechanical Room) Operating Conditions
   - Ensure ambient temperatures are higher than 32ºF/0ºC and lower than 104ºF/40ºC.
   - Prevent the air from becoming contaminated by the products, places, and conditions listed in this manual, Part 3, Section F.
   - Avoid continuously high levels of humidity
   - Never close existing ventilation openings

CAUTION

The service life of the boiler’s exposed metallic surfaces, such as the casing, as well as internal surfaces, such as the heat exchanger, are directly influenced by proximity to damp and salty marine environments. In such areas, higher concentration levels of chlorides from sea spray coupled with relative humidity can lead to degradation of the heat exchanger and other boiler components. In these environments, boilers must not be installed using direct vent systems which draw outdoor air for combustion. Such boilers must be installed using room air for combustion. Indoor air will have a much lower relative humidity and, hence, potential corrosion will be minimized.

⚠ WARNING

This boiler is certified for indoor installations only. Do not install the boiler outdoors. Failure to install this boiler indoors could result in substantial property damage, severe personal injury, or death.

2. Check for nearby connections to:

- System water piping
- Venting connections
- Gas supply piping
- Electrical power
- Condensate drain

3. Check area around boiler. Remove any combustible materials, gasoline, and other flammable liquids.

⚠ WARNING
Failure to keep boiler area clear and free of combustible materials, liquids, and vapors can result in substantial property damage, severe personal injury, or death.

4. Gas control system components must be protected from dripping water during operation and service.

5. If the boiler is to replace an existing boiler, check for and correct any existing system problems, such as:
   - System leaks
   - Location that could cause the system and boiler to freeze and leak.
   - Incorrectly-sized expansion tank

6. Clean and flush system when reinstalling a boiler.

NOTE: When installing in a zero clearance location, it may not be possible to read or view some product labeling. It is recommended to make note of the boiler model and serial number.

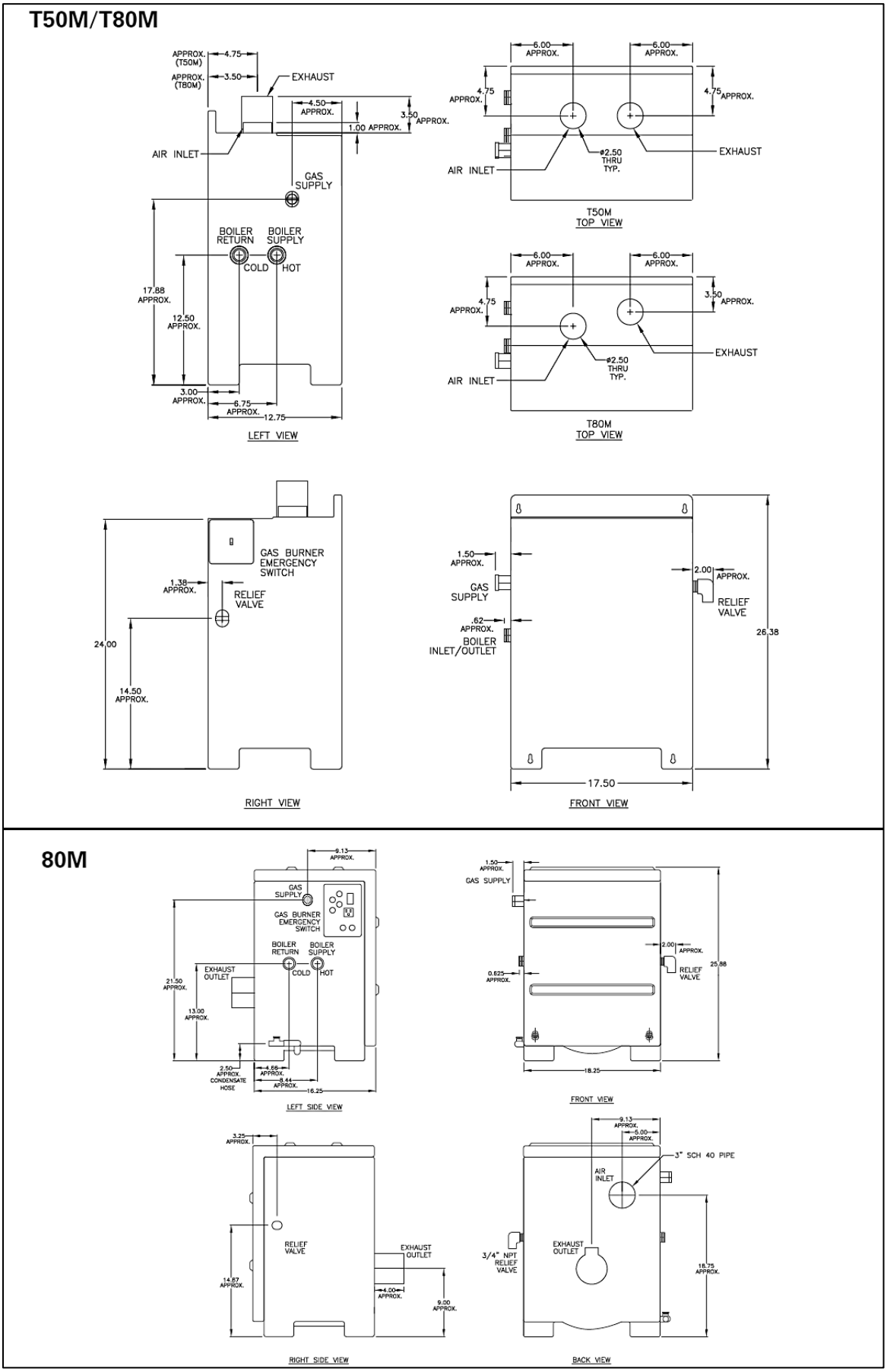

Figure 1 – Dimensions – T-50M / T-80M / 80M

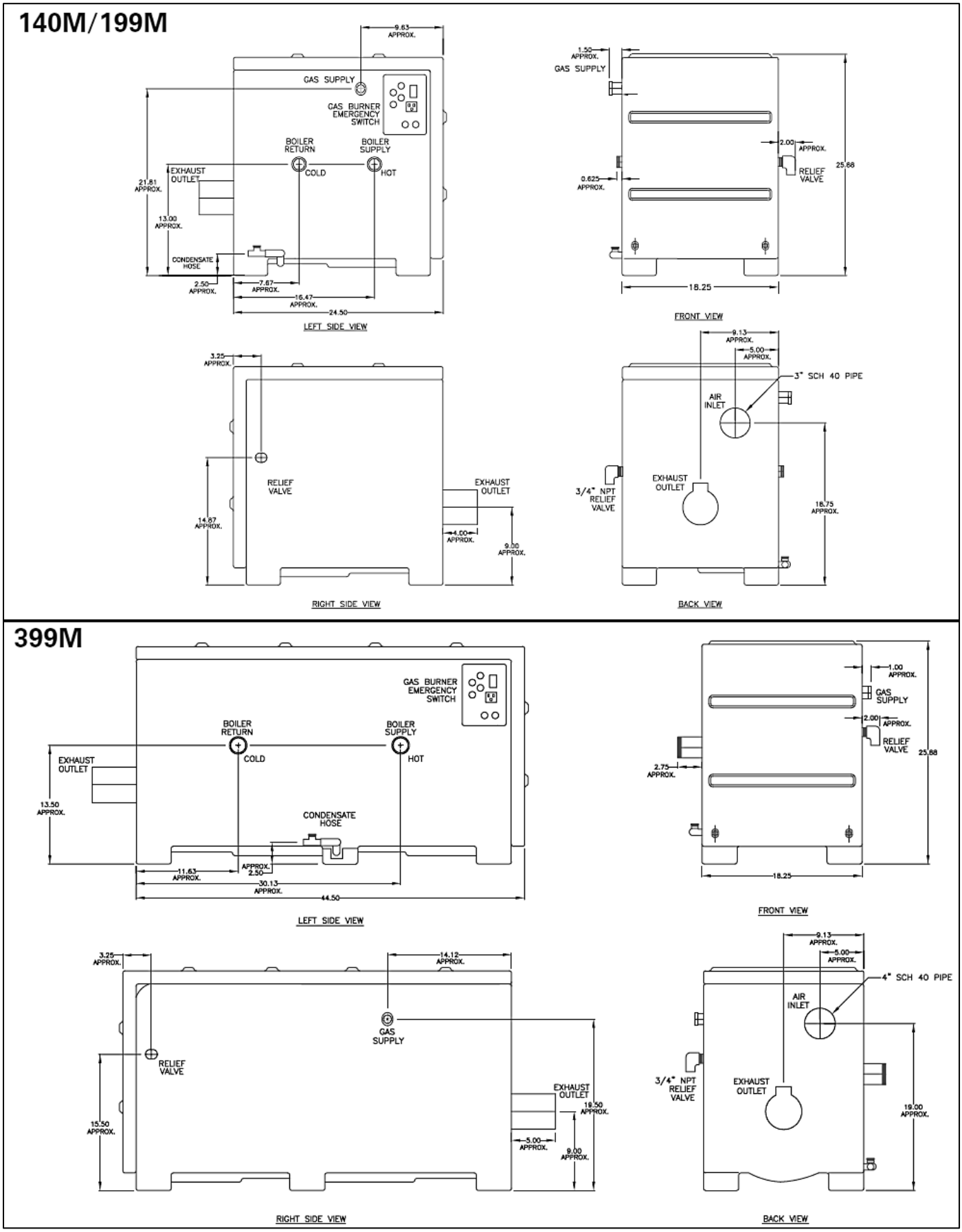

Figure 2 – Dimensions - 140M / 199M / 399M

MUNCHKIN RESIDENTIAL BOILER

Model Number	Input Modulation BTU / hr	DOE Heating BTU / hr	Net I=B=R Ratings BTU / hr	Boiler Water	Water Connections	Gas Connections	Vent Size	Fan Speeds High	Fan Speeds Low	Ship. Wt.*
T50M	18,000–50,000	46,000	40,000	0.4 gal	1-1/4" NPT	3/4"	2"	3000	1250	71 lbs.
T80M	19,000–80,000	74,000	64,000	0.5 gal	1-1/4" NPT	3/4"	2"	4250	1200	71 lbs.
80M	27,000–80,000	74,000	64,000	0.8 gal	1-1/4" NPT	3/4"	3"	3700	1600	87 lbs.
140M	46,000–140,000	129,000	112,000	1.4 gal	1-1/4" NPT	3/4"	3"	3550	1400	113 lbs.
199M	66,000–199,000	183,000	159,000	1.8 gal	1-1/4" NPT	3/4"	3"	4800	1550	125 lbs.

*Does not include pallet

MUNCHKIN COMMERCIAL BOILER

Model Number	Input Modulation BTU / hr	Gross Output BTU / hr	Net I=B=R Ratings BTU / hr	Thermal Efficiency%	Boiler Water	Water Connections	Gas Connections	Vent Size	Fan Speeds High	Fan Speeds Low	Ship. Wt.*
399M	100,000–399,000	379,000	330,000	93.4	4.2	2" NPT	1-1/4"	4"	7700	1900	237 lbs.

*Does not include pallet

Table 1 – Specifications

Before considering location, many factors need to be addressed. Piping, Venting, and Condensation Removal are just a few of the issues that need attention prior to the installation of the boiler. Please read the entire manual, as it could save time and money.

B. LEVELING

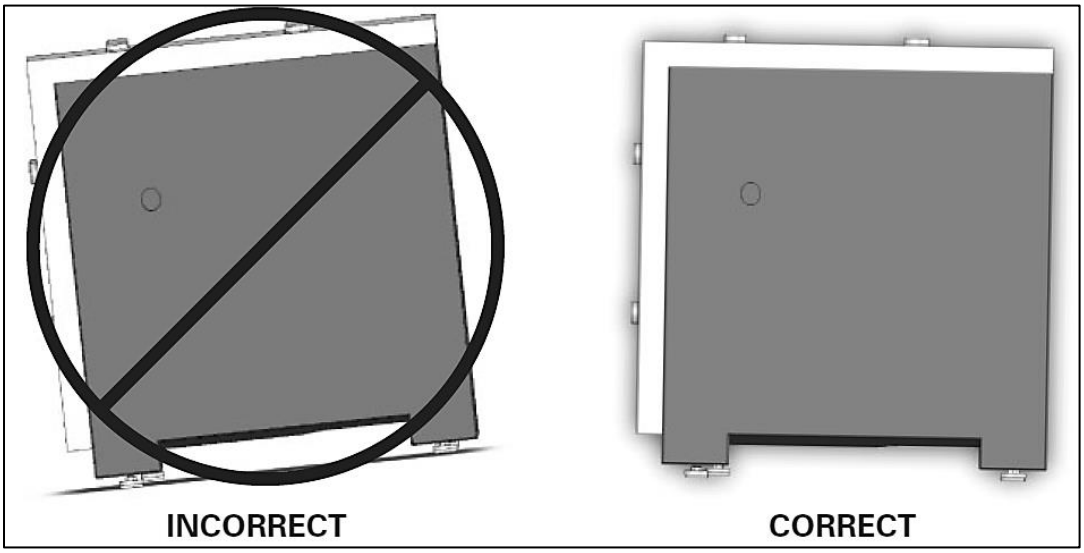

Figure 3 – Boiler Leveling

⚠ CAUTION

In order for the condensate to properly flow out of the collection system, the boiler must be installed with 1/8” per foot pitch toward the back. The location must also support the boiler when it is full of water. The boiler comes equipped with leveling feet. Should the floor beneath the boiler be uneven, use a wrench to adjust the feet so the boiler is pitched back at 1/8” per foot.

C. CLEARANCES FOR SERVICE ACCESS

See Figure 4 for recommended service clearances. If you do not provide the minimum clearances shown, it may not be possible to service the boiler without removing it from the space.

⚠ WARNING

Space must be provided with combustion/ventilation air openings correctly sized for all other appliances located in the same space as the boiler. The boiler cover must be securely fastened to prevent the boiler from drawing air form the boiler room. This is particularly important if the boiler is in a room with other appliances. Failure to comply with the above warnings could result in substantial property damage, severe personal injury, or death.

D. RESIDENTIAL GARAGE, CLOSET, AND ALCOVE INSTALLATIONS

CAUTION

Check with your local Authority Having Jurisdiction for requirements when installing boiler in a garage, closet, or alcove. Please read the entire manual before attempting installation. Failure to properly take factors such as boiler venting, piping, condensate removal, and wiring into account before installation could result in wasted time, money, and possible property damage and personal injury.

PRECAUTIONS

If the boiler is located in a residential garage, per ANSI Z223.1:

- Mount the bottom of the boiler a minimum of 18” above the floor of the garage, to ensure the burner and ignition devices are well off the floor.
- Locate or protect the boiler so it cannot be damaged by a moving vehicle.

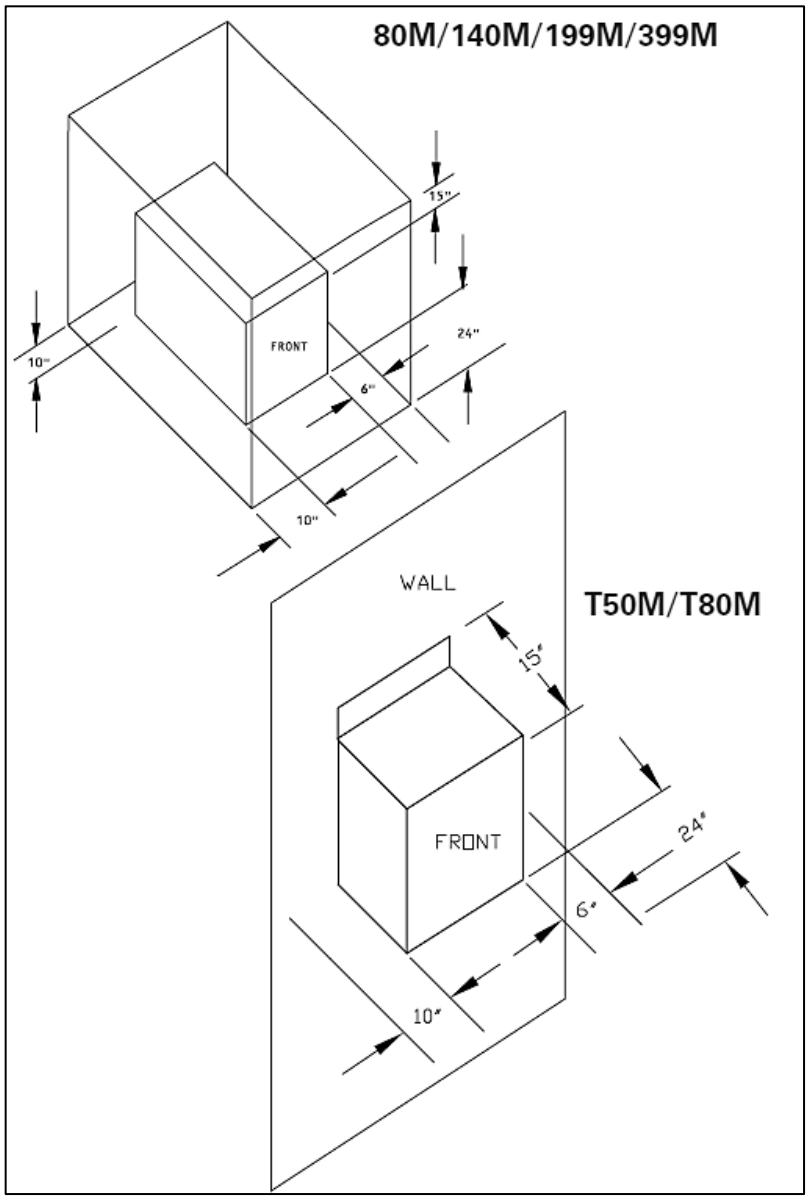

Figure 4 – Required Clearances

⚠ WARNING

For closet or alcove installations, a two pipe venting system must be used. Failure to follow this warning could result in substantial property damage, severe personal injury, or death.

⚠ WARNING

The space must be provided with correctly sized combustion/ventilation air openings for all other appliances located in the space with the boiler. Do not install the boiler in an attic. Failure to comply with these warnings could result in substantial property damage, severe personal injury, or death.

NOTE: For installations using room air for combustion, refer to the boiler venting section, Part 6 in this manual.

E. EXHAUST VENT AND INTAKE PIPE

⚠ WARNING

Vents must be properly supported. Boiler exhaust and intake connections are not designed to carry heavy weight. Vent support brackets must be within 1’ of the boiler and the balance at 4’ intervals. Boiler must be readily accessible for visual inspection for the first 3’ from the boiler.

The boiler is rated ANSI Z21.13 Category IV (pressurized vent, likely to form condensate in the vent) and requires a special vent system designed for pressurized venting.

You must also install intake piping from outdoors to the boiler flue adaptor. The resultant installation is categorized as direct vent (sealed combustion). **NOTE:** To prevent combustion air contamination, see Table 2**.**

Exhaust and intake must terminate near each other and may be vented vertically through the roof or out a side wall. Exhaust vent and intake piping methods are detailed in the Venting Section. Do not attempt to install the boiler using any other means. Be sure to locate the boiler such that the exhaust vent and intake piping can be routed through the building and properly terminated. The exhaust vent and intake piping lengths, routing and termination method must all comply with the methods and limits given in the venting section.

F. PREVENT COMBUSTION AIR CONTAMINATION

Install intake air piping for the boiler as described in the Venting section. Do not terminate exhaust in locations that can allow contamination of intake air.

PRODUCTS TO AVOID	AREAS LIKELY TO HAVE CONTAMINANTS
Spray cans containing fluorocarbons	Dry cleaning/laundry areas and establishments
Permanent wave solutions	Swimming pools
Chlorinated waxes/cleaners	Metal fabrication plants
Chlorine-based swimming pool chemicals	Beauty shops
Calcium chloride used for thawing	Refrigeration repair shops
Sodium chloride used for water softening	Photo processing plants
Refrigerant leaks	Auto body shops
Paint or varnish removers	Plastic manufacturing plants
Hydrochloric or Muriatic acid	Furniture refinishing areas and establishments
Cements and glues	New building construction
Antistatic fabric softeners used in clothes dryers	Remodeling areas
Chlorine-type bleaches, laundry detergents, and cleaning solvents	Garages and workshops
Adhesives used to fasten building products	

Table 2 - Contaminant Table

⚠ WARNING

You must pipe outside air to the boiler air intake. Ensure that the intake air will not contain any of the contaminants listed in Table 2. For example, do not pipe intake air near a swimming pool. Also, avoid areas subject to exhaust fumes from laundry facilities. These areas always contain contaminants. Contaminated air will damage the boiler, resulting in possible substantial property damage, severe personal injury, or death.

NOTE: DAMAGE TO THE BOILER CAUSED BY EXPOSURE TO CORROSIVE VAPORS IS NOT COVERED BY WARRANTY.
(Refer to the limited warranty for complete terms and conditions).

G. REMOVING AN EXISTING BOILER FROM AN EXISTING COMMON VENT SYSTEM

⚠ DANGER

Do not install the boiler into a common vent with any other appliance. This will cause flue gas spillage or appliance malfunction, resulting in possible substantial property damage, severe personal injury, or death.

⚠ WARNING

Failure to follow all instructions can result in flue gas spillage and carbon monoxide emissions, causing severe personal injury or death.

When removing an existing boiler, follow the steps below with each appliance remaining connected to the common venting system in operation, while other appliances remaining connected to common venting system are not operating.

1. Seal any unused openings in the common venting system.

2. Visually inspect the venting system for proper size and horizontal pitch to determine if there is blockage, leakage, corrosion or other deficiencies that

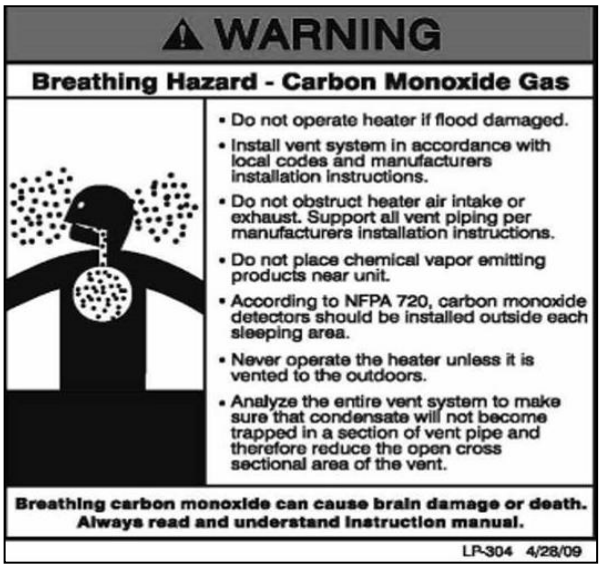

Figure 5

could cause an unsafe condition.

3. If practical, close all building doors, windows and all doors between the space in which the appliance remains connected to the common venting system located and other spaces in the building. Turn on clothes dryers and any appliances not connected to the common venting system. Turn on any exhaust fans, such as range hoods and bathroom exhausts, at maximum speed. Do not operate a summer exhaust fan. Close all fireplace dampers.

4. Place in operation the appliance being inspected. Follow the lighting instructions. Adjust the thermostat so the appliance will operate continuously.

5. Test for spillage at the draft hood relief opening after 5 minutes of main burner operation. Use the flame of a match or candle or smoke from a cigarette.

6. After it has been determined that each appliance remaining connected to common venting system properly vents when tested as outlined, return doors, windows, exhaust fans, fireplace dampers and any other gas burning appliance to their previous condition of use.

7. Any improper operation of the common venting system should be corrected to conform to the National Fuel Gas Code, ANSI Z223.1. When resizing any portion of the common venting system, the system should approach the minimum size as determined using the appropriate tables in Appendix G in the National Fuel Gas Code, ANSI Z 223.1.

PART 4 – PREPARE BOILER

⚠ WARNING

UNCRATING BOILER – Any claims for damage or shortage in shipment must be filed immediately against the transportation company by the consignee.

⚠ CAUTION

COLD WEATHER HANDLING – If the boiler has been stored in a very cold location (BELOW 0ºF) before installation, handle with care until the plastic components come to room temperature.

A. REMOVE BOILER FROM PACKAGING

The boiler is easy to handle. Care must be taken to place it in a safe location prior to installation to prevent damage to the mechanical connections.

B. WALL MOUNTING CONSIDERATIONS

T50M and T80M boilers may be wall mounted. Use only the wall mounting instructions included in installation envelope.

⚠ WARNING

The wall must be capable of carrying the weight of the boiler and its related components. The weights of the boilers are approximately:

T50M – 71 lbs.
T80M – 74 lbs.

Failure to comply with above could result in substantial property damage, severe personal injury, or death.

C. WALL MOUNTING INSTRUCTIONS

⚠ WARNING

It is recommended and safer to wall mount the boiler with two people. Use caution as to not drop the boiler, which could damage it and cause property damage and/or personal injury. Verify that the boiler is securely mounted before leaving unsupervised. Failure to comply with the above and properly mount the boiler could result in substantial property damage, severe personal injury, or death.

1. The wall must be vertically plumb and capable of carrying the weight of the boiler and its related components.

2. The building frame (studs) must be 16" on center. If not, you must use 1/2" minimum plywood 24" x 48", fastened with at least (14) #12 x 3" (3/16" x 3") round head tapping screws to the frame of the building to provide proper support for the boiler. Alternate methods of mounting must not be used. (ex. toggle bolts, hollow wall anchors) or any other fastener other than #12 x 3" (3/16" x 3") round head tapping screws.

CAUTION

If the boiler is not vertically plumb, improper and unsatisfactory operation may occur, causing excessive condensation build-up, nuisance fault codes, and unnecessary maintenance.

3. Prior to lifting the boiler onto the wall, use the enclosed template to level and locate the 2 primary (#12 x 3" [3/16" x 3"]) round head tapping screws, leaving about 1/4" between the screw head and the wall surface to allow for access to the keyway slot located in the back of the boiler panel. It is extremely important that the line on the template is level when locating the first 2 screws. Failure to do so will result in an uneven or out of level installation.

4. Remove the boiler cover. Locate the 2 keyway slots over the screws. Then lower the boiler onto the smallest part of the keyway slot.

5. Once the boiler is mounted on the first 2 screws, finish tightening the screws to the back panel. Then install the 6 additional screws of the same size to the back panel holes. This will provide additional strength and support to the boiler.

PART 5 – BOILER PIPING

⚠ WARNING

Failure to follow the instructions in this section WILL VOID the warranty and may result in property damage, serious injury, or death.

CAUTION

Never use dielectric unions or galvanized steel fittings when connecting to a stainless steel storage tank or boiler. Use only copper or brass fittings. Teflon thread sealant must be used on all connections. All piping and components connected to the boiler must be approved for potable water systems.

Plumbing of this product should only be done by a qualified, licensed plumber in accordance with all local plumbing codes. The boiler may be connected to a storage tank to supply domestic hot water. HTP offers 60/80/119/175 gallon size storage tanks in either stainless steel or glass-lined construction. These storage tanks can be directly connected to the boiler supply and return connection.

CAUTION

The National Standard Plumbing Code, the National Plumbing Code of Canada, and the Uniform Plumbing Code limit the pressure of the heat transfer fluid to less than the minimum working pressure of the potable water system up to 30 psi maximum. The heat transfer fluid must be water or other non-toxic fluid having a toxicity of Class 1, as listed in Clinical Toxicology of Commercial Products, 5th Edition.

A. GENERAL PIPING INFORMATION

CAUTION

The building piping system must meet or exceed the piping requirements in this manual.

CAUTION

Use two wrenches when tightening water piping at boiler. Use one wrench to prevent the boiler return or supply line from turning. Failure to prevent piping connections from turning could cause damage to boiler components.

1. The water supply should be shut off while connecting the boiler. A manual control valve must be placed on the inlet connection to the boiler. Unions can be used on both the hot and cold water lines for future servicing and disconnection of the unit.

2. Purge the water line to remove all debris and air. Debris will damage the water boiler.

3. If the boiler is to be used as a potable water source, it must not be connected to a system that was previously used for non-potable purposes.

4. Ensure that the water filter on the boiler is clean and installed.

5. New plumbing typically has contamination in the lines. Please flush the system before connection.

CAUTION

The boiler control module uses temperature sensors to provide both high limit protection and modulating temperature control. The control module also provides low water protection by sensing the water pressure. Some codes/jurisdictions may require additional external controls.

B. RELIEF VALVE

The relief valve must comply with the standard for *Relief Valves and Automatic Gas Shutoff Devices for Hot Water Supply Systems (ANSI Z21.22)* and/or the standard *Temperature, Pressure, Temperature and Pressure Relief Valves and Vacuum Relief Valves, CAN1-4.4*, as well as all local codes. In addition, the relief valve must be rated to the maximum BTU/hr rating of the boiler.

The *American National Standard (ANSI Z21.10.3) / Canadian Standard (CSA 4.3)* do not require a combination temperature and pressure relief valve for this boiler. However, a combination temperature and pressure relief valve may be required by local codes.

Connect discharge piping to safe disposal location. See the following guidelines.

⚠ WARNING

To avoid water damage or scalding due to relief valve operation:

- Discharge line must be connected to relief valve outlet and run to a safe place of disposal. Terminate the discharge line in a manner that will prevent possibility of severe burns or property damage should the relief valve discharge.
- Discharge line must be as short as possible and the same size as the valve discharge connection throughout its entire length.
- Discharge line must pitch downward from the valve and terminate at least 6” above the floor drain, making discharge clearly visible.
- The discharge line shall terminate plain, not threaded, with a material serviceable for temperatures of 375ºF or greater.
- Do not pipe discharge to any location where freezing could occur.
- No shutoff valve may be installed between the relief valve and boiler or in the discharge line. Do not plug or place any obstruction in the discharge line.
- Test the operation of the relief valve after filling and pressurizing the system by lifting the lever. Make sure the valve discharges freely. If the valve fails to operate correctly, immediately replace with a new properly rated relief valve.
- Test relief valve at least once annually to ensure the waterway is clear. If valve does not operate, turn the boiler “off” **and call a plumber immediately.**
- Take care whenever operating relief valve to avoid scalding injury or property damage.
- For boilers installed with only a pressure relief valve, the separate storage vessel must have a temperature and pressure relief valve installed. This relief valve shall comply with *Relief Valves for Hot Water Supply Systems, ANSI Z21.22 / CSA4.4.*

FAILURE TO COMPLY WITH THE ABOVE GUIDELINES COULD RESULT IN FAILURE OF RELIEF VALVE OPERATION, RESULTING IN POSSIBILITY OF SUBSTANTIAL PROPERTY DAMAGE, SEVERE PERSONAL INJURY, OR DEATH.

⚠ WARNING

Hot water outlet pipes can be hot to touch. Insulation must be used for hot water pipes below 36” to protect children against injuries due to scalds.

NOTE: If a relief valve discharges periodically, this may be due to thermal expansion in a closed water supply system. **DO NOT PLUG THE RELIEF VALVE.** An expansion tank may be required.

APPROXIMATE TIME / TEMPERATURE RELATIONSHIPS IN SCALDS	
120ºF	More than 5 minutes
125ºF	1 ½ to 2 minutes
130ºF	About 30 seconds
135ºF	About 10 seconds
140ºF	Less than 5 seconds
145ºF	Less than 3 seconds
150ºF	About 1 ½ seconds
155ºF	About 1 second

Table 3

⚠ DANGER

⚠ DANGER Water temperature over 125 degrees F. can cause severe burns instantly, or death from scalds. Children, disabled, and elderly are at highest risk of being scalded. See instruction manual before setting temperature at water heater. Feel water before bathing or showering! Temperature limiting valves are available. See chart below showing temperature burn rate. **⚠ DANGER**

C. SEPARATE LOW WATER CUTOFF

A low water cutoff may be required by state and local codes, or by some insurance companies. A low water cutoff is also required if the boiler is installed above the piping level. Check code requirements before installing the boiler.

If required:

- Use an electrode probe type low water cutoff designed for hydronic installations.

- Install in a tee on the supply piping above the boiler.
- Follow low water cutoff manufacturer's instructions.

D. BACKFLOW PREVENTER

Use a backflow preventer specifically designed for hydronic boiler installations. This valve should be installed on the cold water fill supply line per local codes. (See piping details at the end of this section.)

CAUTION

All piping methods shown in this manual use primary/secondary connection to the boiler loop. This is to avoid the possibility of noise or actuator problems in zone valves because of the high-head boiler circulator. For other piping methods, consult your local HTP representative or refer to separate piping details in this manual.

E. SYSTEM WATER PIPING METHODS

EXPANSION TANK AND MAKE-UP WATER

1. Ensure expansion tank size will handle boiler and system water volume and temperature. Allow 3 gallons for the boiler and its piping; 4 gallons for 399 models and piping.

⚠ WARNING

Expansion tanks must be sized according to total system volume. This includes all length of pipe, all fixtures, appliances, etc. Failure to properly size system expansion could result in wasted time, money, and possible property damage, personal injury, or death.

CAUTION

Undersized expansion tanks cause system water to be lost from relief valve and make-up water to be added through fill valve. Eventual failure can result due to excessive make-up water addition. **SUCH FAILURE IS NOT COVERED BY WARRANTY.**

2. Expansion tank must be located as shown in Piping diagrams, or following recognized design methods. See tank manufacturer's instructions for details.

3. Connect the expansion tank to the air separator only if the separator is on the suction side of the circulator. Always install the system fill connection at the same point as the expansion tank connection to the system.

4. Most chilled water systems are piped using a closed type expansion tank.

CAUTION

DO NOT install automatic air vents on closed-type expansion tank systems. Air must remain in the system and return to the tank to provide its air cushion. An automatic air vent would cause air to leave the system, resulting in water-logging the expansion tank.

DIAPHRAGM (OR BLADDER) EXPANSION TANK

Always install an automatic air vent on top of the air separator to remove residual air from the system.

F. CIRCULATORS

CAUTION

DO NOT use the boiler circulator in any location other than the ones shown in this manual. The boiler circulator is selected to ensure adequate flow through the boiler. Failure to comply could result in unreliable performance and nuisance shut downs from insufficient flow.

SIZING SPACE HEAT SYSTEM PIPING

1. See Piping Details in this section. In all diagrams, the space heating system is isolated from the heating loop by the primary/secondary connection.

2. Size the piping and components in the space heating system using recognized design methods.

G. HYDRONIC PIPING WITH CIRCULATORS, ZONE VALVES, AND MULTIPLE BOILERS

This boiler may function in a closed loop 15 psi system. A factory installed water pressure switch ensures adequate pressure in the system. The boiler will not operate without a minimum of 10 psi water pressure. This assures you that if the system does have a leak, the boiler will lock out (PRO on the display) before it damages the heat exchanger.

The included temperature and pressure gauge allows the user to monitor the system pressure and outlet temperature from the boiler. It is important to note that the boiler has a minimal amount of pressure drop that must be calculated when sizing the circulators. Each installation must also have an air elimination device that will remove air from the system.

Install the boiler so the gas ignition components are protected from water (dripping, spraying, etc.), and allow clearance for basic service of the circulator, valves, and other components. Observe minimum 1" clearance around all un-insulated hot water pipes when openings around pipes are not protected by noncombustible materials. On a boiler installed above radiation level, some states and local codes require a low water cut off device (See Part C this section). If the boiler supplies hot water to heating coils in air handler units, flow control valves or other devices must be installed to prevent gravity circulation of boiler water in the coils during the cooling cycle. Chilled water medium must be piped in parallel with the boiler.

Freeze protection for new or existing systems must use glycol specifically formulated for hydronic systems that includes inhibitors to prevent the glycol from attacking the metallic system components. The system should be check annually, and as recommended by the glycol producer, to ensure that the system is operating with the correct glycol concentration and inhibitor level. Allowances should be made for the expansion of glycol solution in the system, as 50% by volume glycol solution expands 4.8% in volume when increasing in temperature from 32oF to 180oF, while water expands 3% over the same temperature rise.

CAUTION
The boiler should not be operated as a potable hot water boiler. Operating this boiler as a potable water boiler will VOID warranty.

The basic steps listed below provide a basic installation guide for the boiler.

1. Connect the system return marked "Boiler In".

2. Connect the system supply marked "Boiler Out".

3. Install purge and balance valve or shut off valve and drain on system return to purge air out of each zone.

4. Install a back flow preventer on the cold feed make-up water line.

5. Install a pressure reducing valve on the cold feed make-up water line, (15 psi nominal on the system return). Check temperature and pressure gauge, which should read minimum pressure of 12 psi.

6. Install a circulator as shown in piping details (this section). Make sure the circulator is properly sized for the system and friction loss.

7. Install an expansion tank on the system supply. Consult the tank manufacturer's instruction for specific information relating to expansion tank installation. Size the expansion tank for the required system volume and capacity.

8. Install an air elimination device on the system supply.

9. Install a drain valve at the lowest point of the system. NOTE: The boiler cannot be drained completely of water without purging the unit with an air pressure 15 psi.

10. The safety relief valve is installed at the factory. Pipe the discharge of the safety relief valve to prevent injury in the event of pressure relief. Pipe the discharge 6" above the drain to a drain. Provide piping that is the same size as the safety relief valve outlet. **Never block the outlet of safety relief valve.**

H. CIRCULATOR SIZING

The heat exchanger has pressure drop which must be considered in your system design. Refer to the graph in **Figure 6** for pressure drop through the heat exchanger for recommended pump selection at a 20Δt design.

The chart below represents various system temperatures and their respective flows and friction loss through the boiler, which will aid circulator selection.

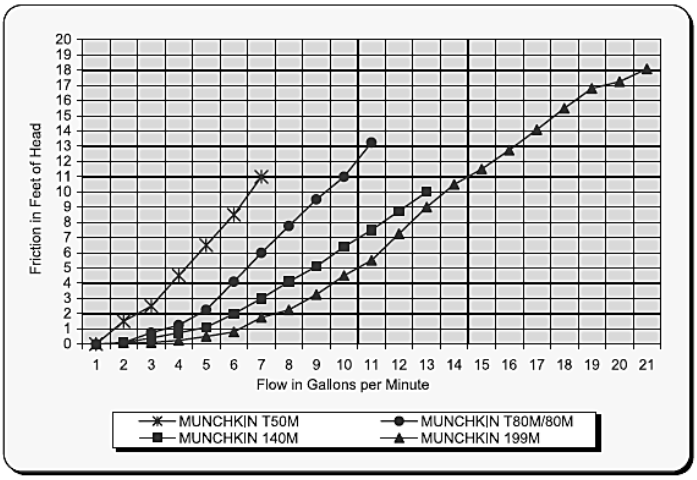

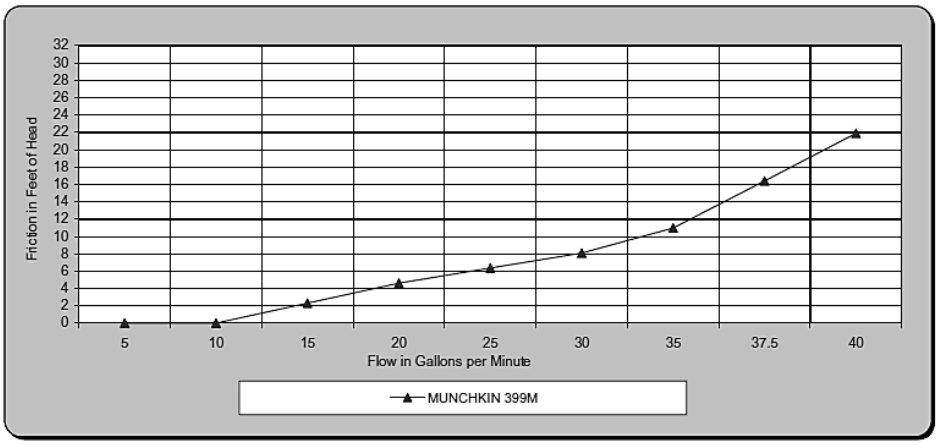

* NOTE: The recommended circulators are based on 1 gpm per 10,000 btu/hr with 20°Δt.

CIRCULATOR SIZING CHART

for Central Heating Circulator (P1)* and SuperStor Ultra Circulator (P2)*

	Taco		*Grundfos*		*Bell & Gossett*	
	P1	**P2**	**P1**	**P2**	**P1**	**P2**
T50/T80/80M	007	009	UPS15-58F SPD-2	UPS15-58F SPD-3	NRF-22	NRF-22
140M	0010	0011	26-64F	26-96F	NRF-33	NRF-36
199M	0011	0013	26-96F	26-96F	NRF-36	NRF-36
399M	1400-50	1400-50	UPS 32-160	UPS 32-160	PL-55	PL-55

Note: SuperStor Ultra Indirect pump assumes the following: (6) 90 degree elbows and (1) tee on the run of 20' and 1" of copper tube size, but does not include any flow checks or zone valves.
*See drawings on the following pages

Figure 6 – Pressure Drop Graph and Temperature Rise Chart – LP-171-F NOTE: The recommended circulators are based on 1 gpm per 10,000 btu/hr with 20Δt.

The chart below represents various system temperatures, respective flows and friction loss through the boiler to aid in circulator selection.

SYSTEM TEMPERATURE RISE CHART						
Model	Friction Feet	20°Δt Flow G P M	Friction Feet	25°Δt Flow G P M	Friction Feet	30°Δt Flow G P M
T-50	6.5′	5	4.5′	4	3′	3.3
T-80	7.8′	8	4.7′	6.4	2.9′	5.3
80M	7.8′	8	4.7′	6.4	2.9′	5.3
140M	11′	14	8′	11.2	6′	9.3
199M	17′	19	12.3′	15.2	8.5′	12.6
399M	21′	39	9′	31.2	7′	26

N/R = Not Recommended
N/A = Not Available

I. ZONING WITH ZONE VALVES

1. Connect boiler to system as shown in 2A and 2B in Piping Details when zoning with zone valves. The primary/secondary piping shown ensures the boiler loop will have sufficient flow. It also avoids applying the high head of the boiler circulator to the zone valves.

2. Connect DHW (domestic hot water) piping to indirect storage water heater as shown.

J. ZONING WITH CIRCULATORS

1. Connect boiler to system when circulator zoning as shown in 2C and 2D in Piping Details when zoning with circulators. The boiler circulator cannot be used for a zone. It must supply only the boiler loop.

2. Install a separate circulator for each zone.

3. Connect DHW (domestic hot water) piping to indirect storage water boiler as shown.

K. MULTIPLE BOILERS

1. Connect multiple boilers as shown in 2E and 2F in Piping Details.

2. All piping shown is reverse return to assure balanced flow through the connected boilers.

3. Each connected boiler must have its own circulator pump to assure adequate flow.

4. Connect DHW (domestic hot water) piping to indirect storage water heater as shown.

L. FILL AND PURGE HEATING SYSTEM

- Attach the hose to balance and purge hose connector or drain valve and run hose to nearest drain.
- Close the other side of the balance and purge valve or the shut off valve after the drain.
- Open first zone balance and purge or drain valve to let water flow out the hose. If zone valves are used, open the valves one at a time manually. (NOTE: You should check valve manufacturer's instruction prior to opening valves manually, so as not to damage the valve.)
- Manually operate fill valve regulator. When water runs out of the hose, while it's connected to the balance and purge valve or drain you will see a steady stream of water (without bubbles). Close balance and purge valve or drain to stop the water from flowing. Disconnect the hose and connect it to next zone to be purged.
- Repeat this procedure for additional zones (one at time).

CAUTION

For installations that incorporate standing iron radiation and systems with manual vents at the highest points: Follow the above section and, starting with the nearest manual vent, open until water flows out. Then close vent. Repeat procedure, working your way toward furthest air vent. It may be necessary to install a basket strainer in an older system where larger amounts of sediment may be present. Annual cleaning of the strainer may be necessary.

Upon completion, make sure that the fill valve is in automatic position and each zone balance and purge or shut off is in an open position and zone valves are positioned for automatic operation.

⚠ WARNING

Use only inhibited propylene glycol solutions, specially formulated for hydronic systems. Ethylene glycol is toxic and can attack gaskets and seals used in hydronic systems. Glycol mixtures should not exceed 50%.

1. Glycol for hydronic applications includes inhibitors that prevent it from attacking metallic system components. Make certain that the system fluid is checked for the correct glycol concentration and inhibitor level.

2. The glycol solution should be tested at least once a year and as recommended by the glycol manufacturer.

3. Anti-freeze solutions expand more than water. For example a 50% by volume solution expands 4.8% in volume for a temperature increase from 32° F to 180° F, while water expands 3% with the same temperature rise. Allowances must be made for this expansion in the system design.

4. A 30% mixture of glycol will result in 15% BTU output loss and a 5% increase in head against system circulator.

5. A 50% mixture of glycol will result in 30% BTU output loss and a 50% increase in head against system circulator.

CAUTION
It is highly recommended that you carefully follow the glycol manufacturer's concentrations, expansion requirements, and maintenance recommendations (pH additive breakdown, inhibitor reduction, etc.) You must carefully figure the additional system friction loss, as well as the reduction in heat transfer coefficients.

M. PIPING DETAILS

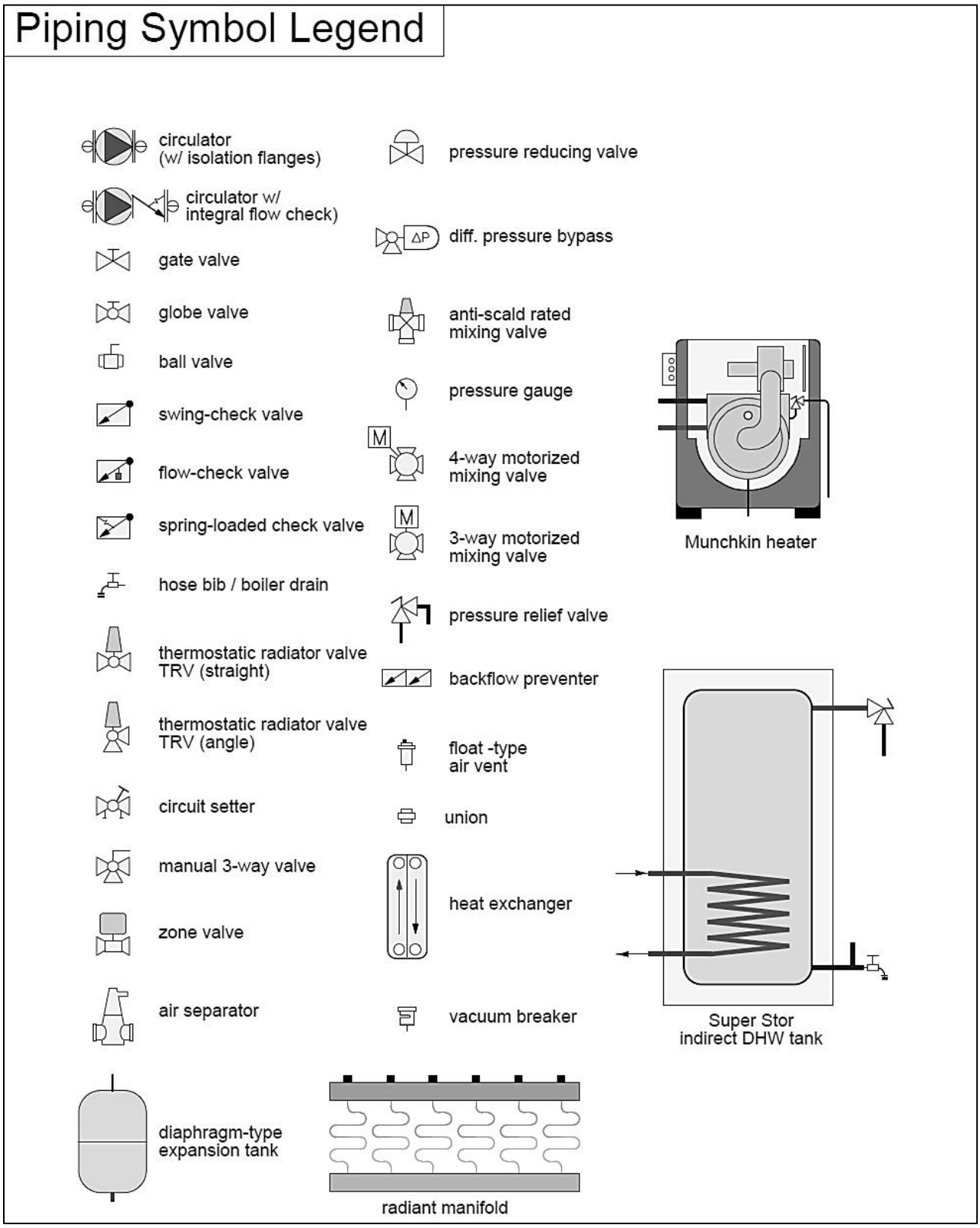

Figure 7

Standard Munchkin boiler
Preferred piping (zoning with valves)
Space heating mode

Drawing 2A

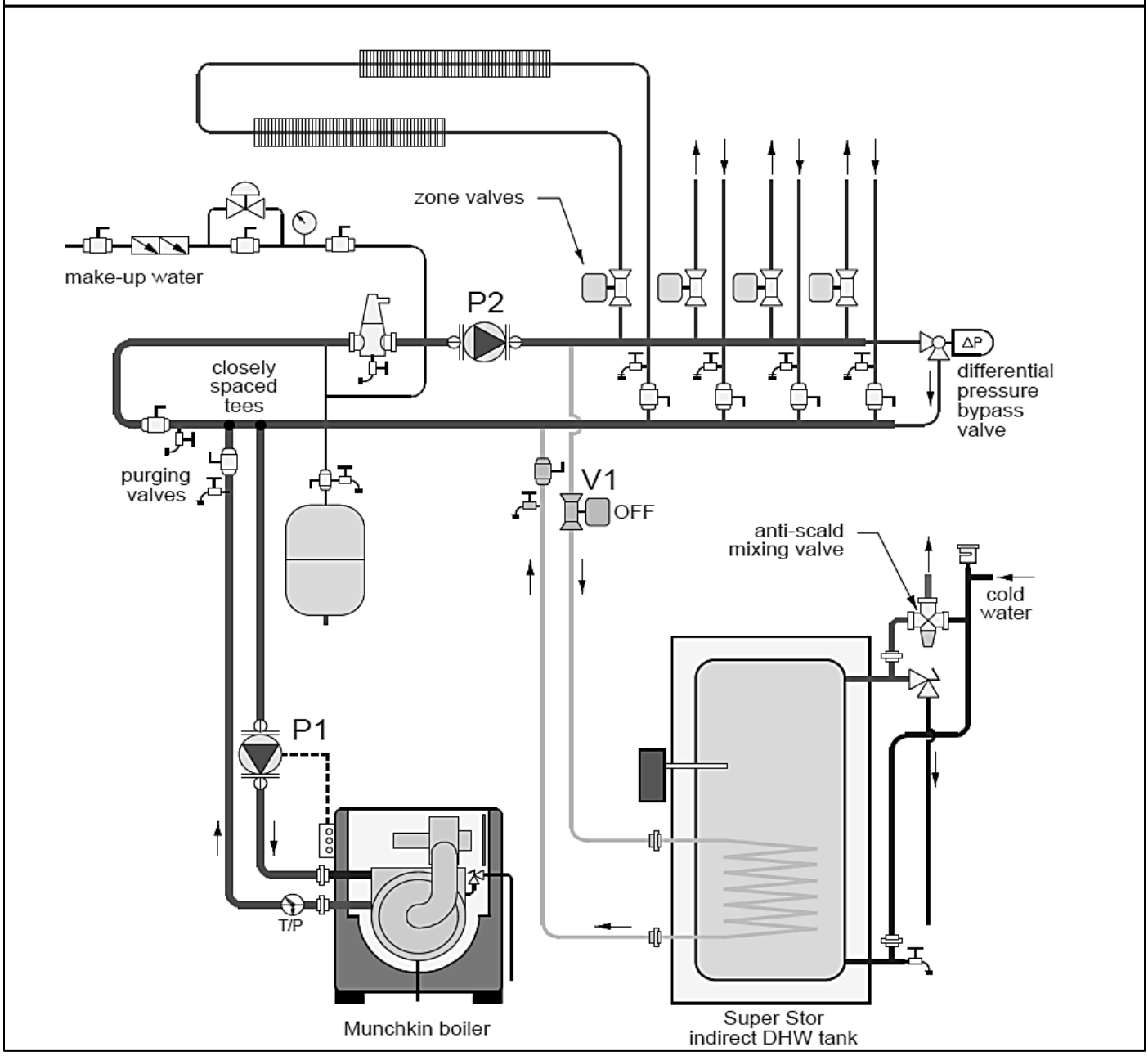

Figure 8

NOTES:
1. This drawing is meant to demonstrate system piping concept only. Installer is responsible for all equipment and detailing required by local codes.
2. Adjust differential pressure bypass valve to eliminate any flow velocity noise when zone with highest pressure drop operates by itself.
3. The **minimum** pipe size for connecting an indirect water boiler is 1”.
4. The **minimum** pipe size for connecting the unit is 1.25” and 2” for the 399.
5. Circulators are shown with isolation flanges. The alternative is standard flanges with full port ball valves. Purge valves can be used with the circulator flanges as an alternative.
6. The anti-scald mixing valve is recommended if the DHW temperature is set above the factory setting of 119ºF.
7. Install a minimum of 12 diameters of straight pipe upstream of all circulators.
8. A minimum of 6 pipe diameters of straight pipe shall be installed upstream and downstream of all closely spaced tees.
9. All closely spaced tees shall be within 4 pipe diameters center to center spacing.

NOTE: For Vision piping applications, refer to the Vision Installation Piping Diagrams.

Standard Munchkin boiler
Preferred piping (zoning with valves)
Domestic water heating mode

Drawing 2B

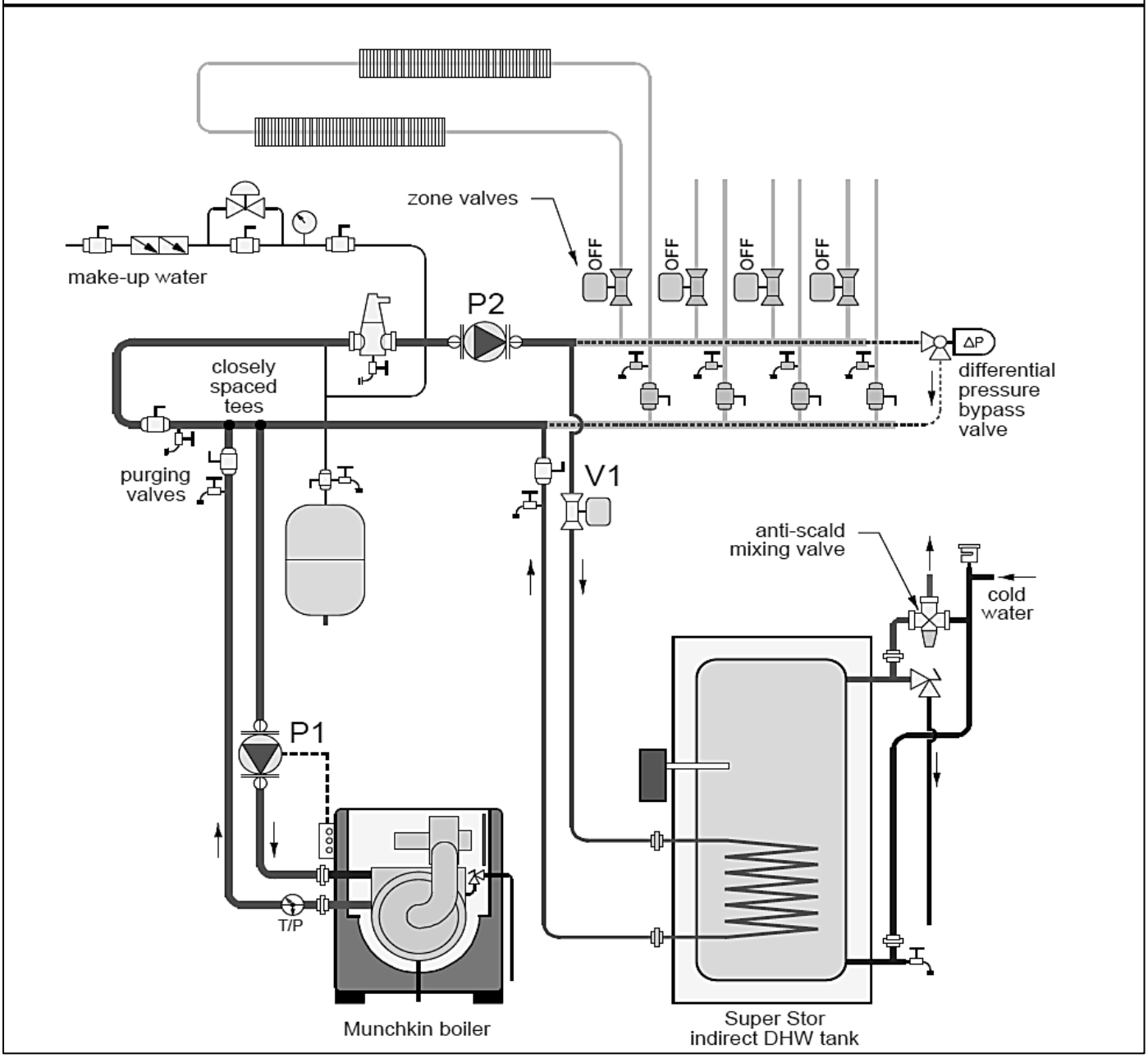

Figure 9

NOTES:
1. This drawing is meant to demonstrate system piping concept only. Installer is responsible for all equipment and detailing required by local codes.
2. Adjust differential pressure bypass valve to eliminate any flow velocity noise when zone with highest pressure drop operates by itself.
3. The **minimum** pipe size for connecting an indirect water heater is 1”.
4. The **minimum** pipe size for connecting the unit is 1.25” and 2” for the 399.
5. Circulators are shown with isolation flanges. The alternative is standard flanges with full port ball valves. Purge valves can be used with the circulator flanges as an alternative.
6. The anti-scald mixing valve is recommended if the DHW temperature is set above the factory setting of 119ºF.
7. Install a minimum of 12 diameters of straight pipe upstream of all circulators.
8. A minimum of 6 pipe diameters of straight pipe shall be installed upstream and downstream of all closely spaced tees.
9. All closely spaced tees shall be within 4 pipe diameters center to center spacing.

NOTE: For Vision piping applications, refer to the Vision Installation Piping Diagrams.

Standard Munchkin boiler Preferred piping (zoning with circulators) Space heating mode

Drawing 2C

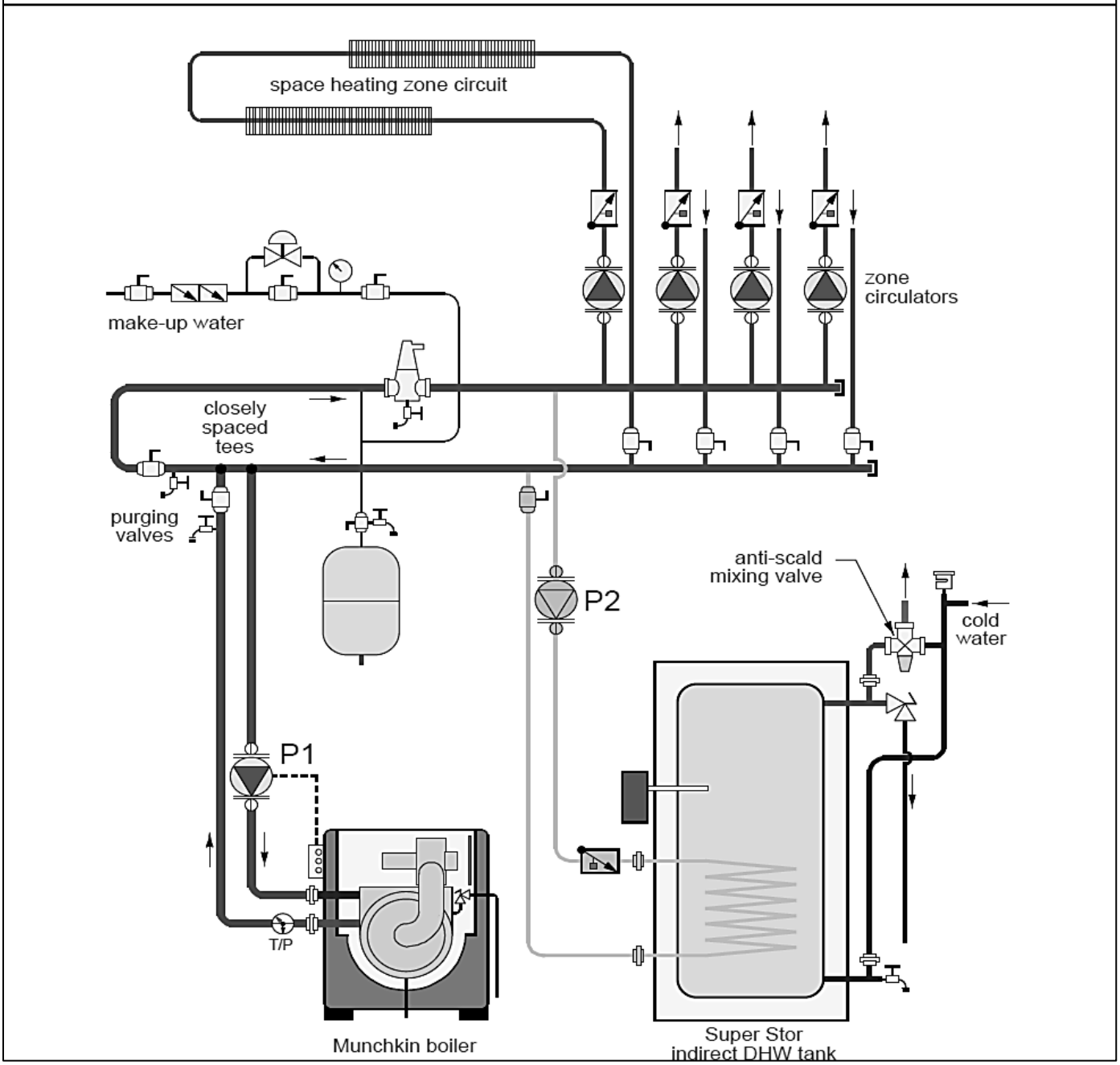

Figure 10

NOTES:
1. This drawing is meant to demonstrate system piping concept only. Installer is responsible for all equipment and detailing required by local codes.
2. Adjust differential pressure bypass valve to eliminate any flow velocity noise when zone with highest pressure drop operates by itself.
3. The **minimum** pipe size for connecting an indirect water heater is 1”.
4. The **minimum** pipe size for connecting the unit is 1.25” and 2” for the 399.
5. Circulators are shown with isolation flanges. The alternative is standard flanges with full port ball valves. Purge valves can be used with the circulator flanges as an alternative.
6. The anti-scald mixing valve is recommended if the DHW temperature is set above the factory setting of 119ºF.
7. Install a minimum of 12 diameters of straight pipe upstream of all circulators.
8. A minimum of 6 pipe diameters of straight pipe shall be installed upstream and downstream of all closely spaced tees.
9. All closely spaced tees shall be within 4 pipe diameters center to center spacing.

NOTE: For Vision piping applications, refer to the Vision Installation Piping Diagrams.

Standard Munchkin boiler
Preferred piping (zoning with circulators)
Domestic water heating mode

Drawing 2D

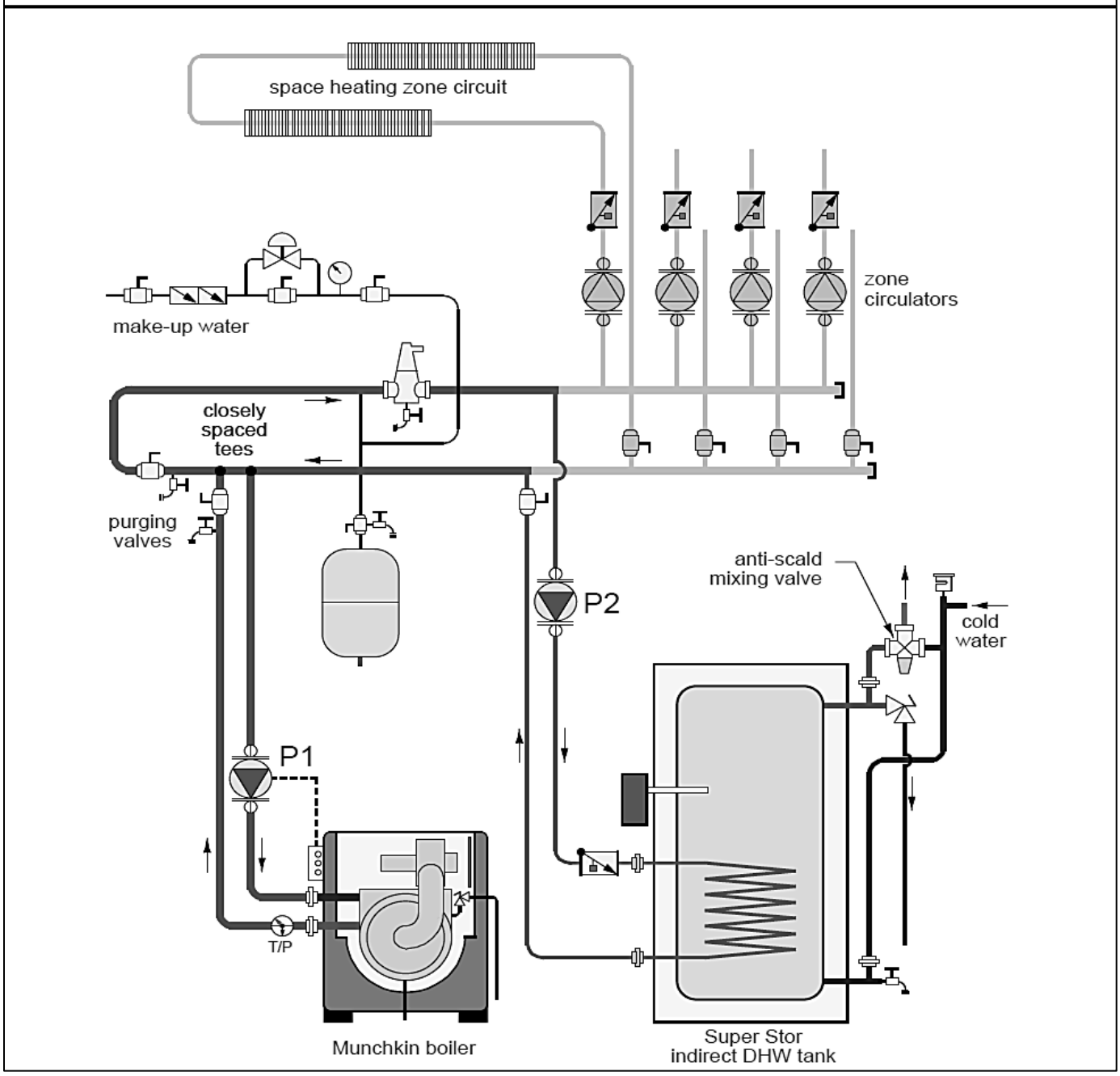

Figure 11

NOTES:
1. This drawing is meant to demonstrate system piping concept only. Installer is responsible for all equipment and detailing required by local codes.
2. Adjust differential pressure bypass valve to eliminate any flow velocity noise when zone with highest pressure drop operates by itself.
3. The **minimum** pipe size for connecting an indirect water heater is 1”.
4. The **minimum** pipe size for connecting the unit is 1.25” and 2” for the 399.
5. Circulators are shown with isolation flanges. The alternative is standard flanges with full port ball valves. Purge valves can be used with the circulator flanges as an alternative.
6. The anti-scald mixing valve is recommended if the DHW temperature is set above the factory setting of 119ºF.
7. Install a minimum of 12 diameters of straight pipe upstream of all circulators.
8. A minimum of 6 pipe diameters of straight pipe shall be installed upstream and downstream of all closely spaced tees.
9. All closely spaced tees shall be within 4 pipe diameters center to center spacing.

NOTE: For Vision piping applications, refer to the Vision Installation Piping Diagrams.

Standard Munchkin boiler Preferred piping (multiple boilers / zoning with circulators) Space heating mode

Drawing 2E

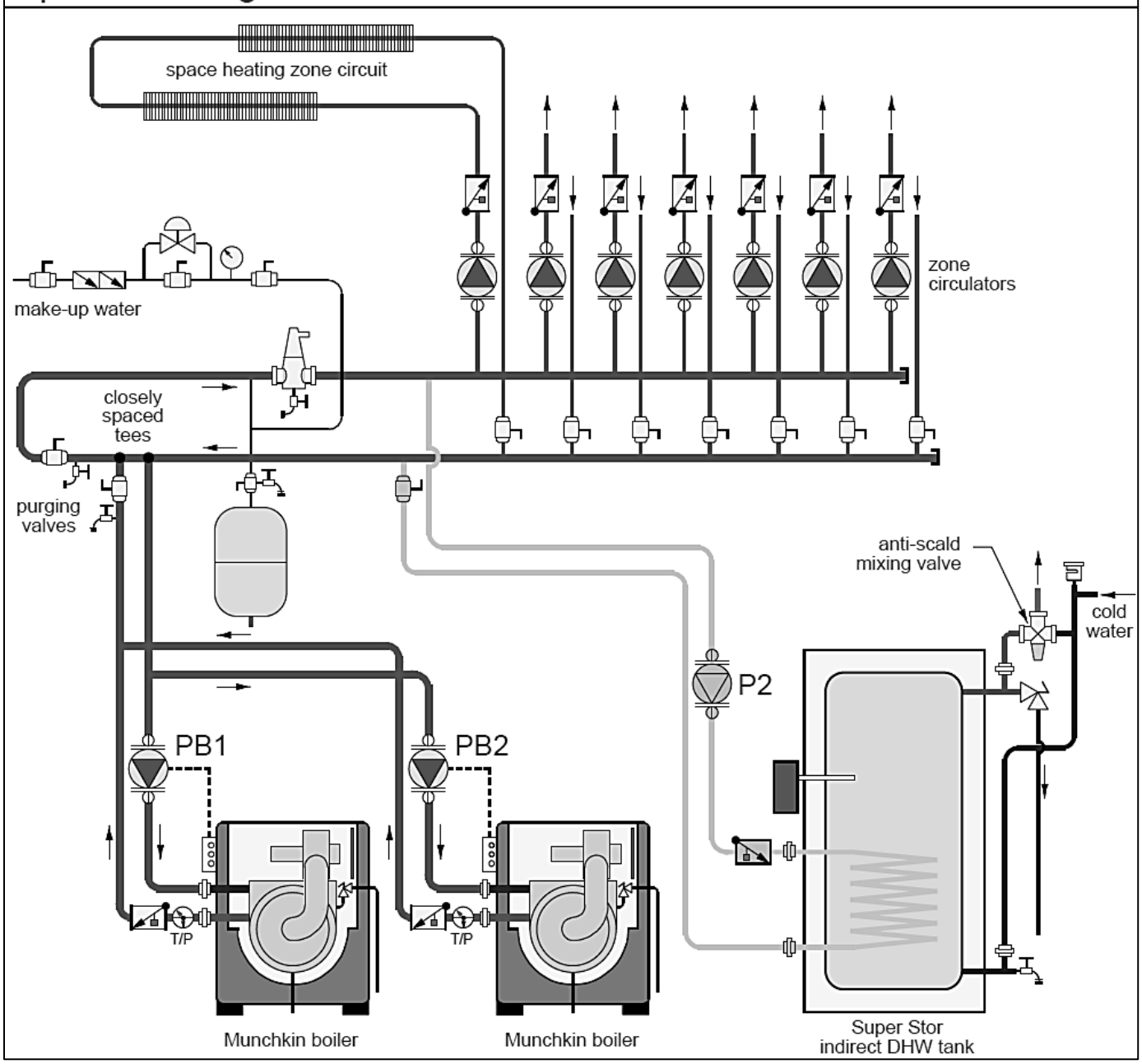

Figure 12

NOTES:
1. This drawing is meant to demonstrate system piping concept only. Installer is responsible for all equipment and detailing required by local codes.
2. Adjust differential pressure bypass valve to eliminate any flow velocity noise when zone with highest pressure drop operates by itself.
3. The **minimum** pipe size for connecting an indirect water heater is 1”.
4. The **minimum** pipe size for connecting the unit is 1.25” and 2” for the 399.
5. Circulators are shown with isolation flanges. The alternative is standard flanges with full port ball valves. Purge valves can be used with the circulator flanges as an alternative.
6. The anti-scald mixing valve is recommended if the DHW temperature is set above the factory setting of 119ºF.
7. Install a minimum of 12 diameters of straight pipe upstream of all circulators.
8. A minimum of 6 pipe diameters of straight pipe shall be installed upstream and downstream of all closely spaced tees.
9. All closely spaced tees shall be within 4 pipe diameters center to center spacing.

NOTE: For Vision piping applications, refer to the Vision Installation Piping Diagrams.

Standard Munchkin boiler Preferred piping (multiple boilers / zoning with circulators) Domestic water heating mode

Drawing 2F

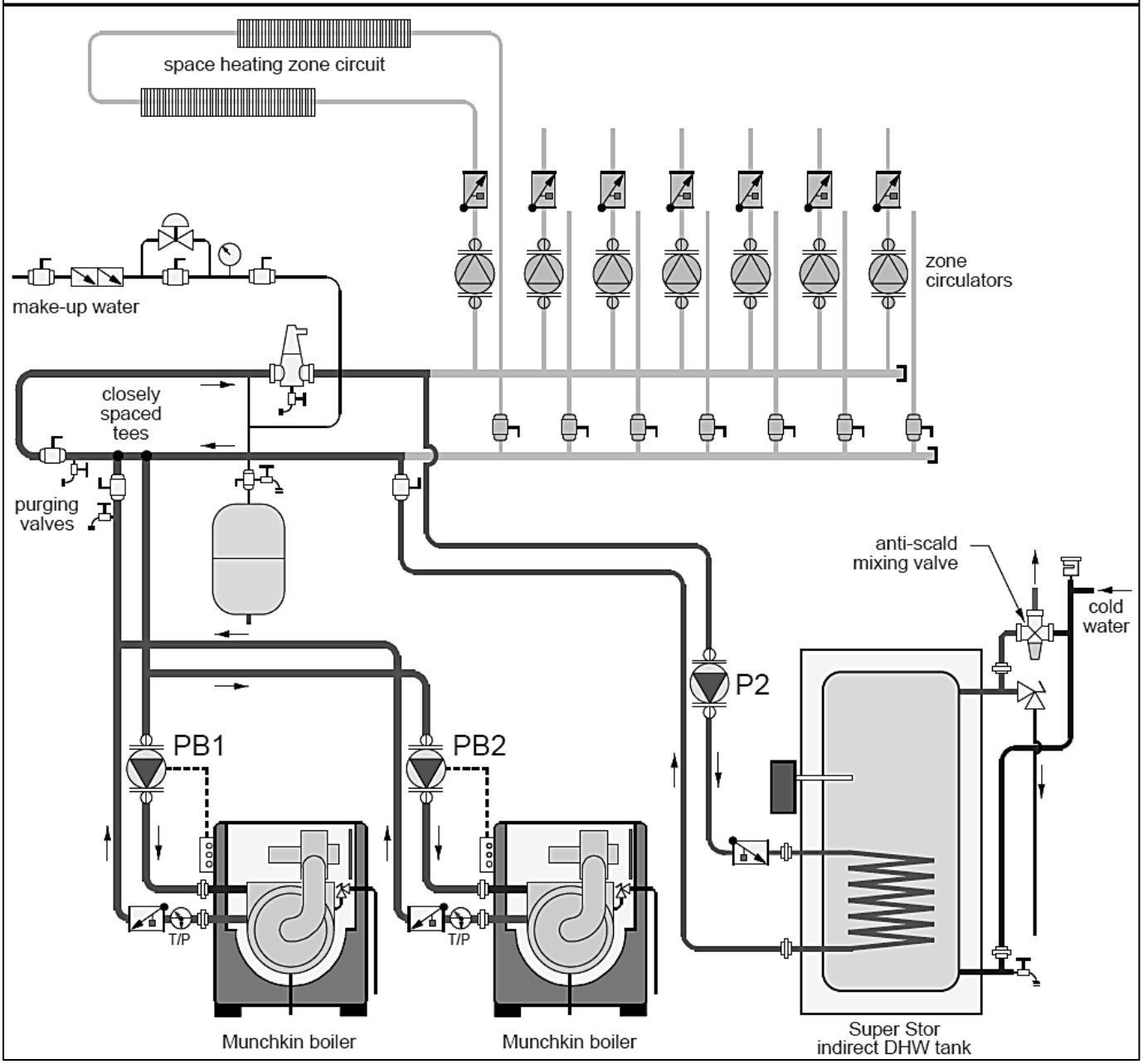

Figure 13

NOTES:
1. This drawing is meant to demonstrate system piping concept only. Installer is responsible for all equipment and detailing required by local codes.
2. Adjust differential pressure bypass valve to eliminate any flow velocity noise when zone with highest pressure drop operates by itself.
3. The **minimum** pipe size for connecting an indirect water heater is 1”.
4. The **minimum** pipe size for connecting the unit is 1.25” and 2” for the 399.
5. Circulators are shown with isolation flanges. The alternative is standard flanges with full port ball valves. Purge valves can be used with the circulator flanges as an alternative.
6. The anti-scald mixing valve is recommended if the DHW temperature is set above the factory setting of 119ºF.
7. Install a minimum of 12 diameters of straight pipe upstream of all circulators.
8. A minimum of 6 pipe diameters of straight pipe shall be installed upstream and downstream of all closely spaced tees.
9. All closely spaced tees shall be within 4 pipe diameters center to center spacing.

NOTE: For Vision piping applications, refer to the Vision Installation Piping Diagrams.

PART 6 – PIPING WITH OPTIONAL VISION 1 SYSTEM (DHW PRIORITY WITH OUTDOOR RESET)

A. VISION 1 SYSTEM PIPING

It is important that the system piping is done correctly when using the Vision 1 System. Follow the piping diagrams 3A through 4H when piping your boiler. All general piping practices should still be maintained.

B. ZONING WITH ZONE VALVES USING VISION 1

1. Connect the boiler to the system as shown in piping details 3A through 3C.

2. Connect the DHW circulator (P2) directly to the boiler as shown in the piping details. The boiler circulator (P1) will shut down when there is a DHW demand.

C. ZONING WITH CIRCULATORS USING VISION 1

1. Connect the boiler to the system as shown in piping details 4A through 4H.

2. Connect the DHW circulator (P2) directly to the boiler as shown in the piping details. The boiler circulator (P1) will shut down when there is a DHW demand.

D. PIPING DETAILS WITH THE VISION 1 SYSTEM

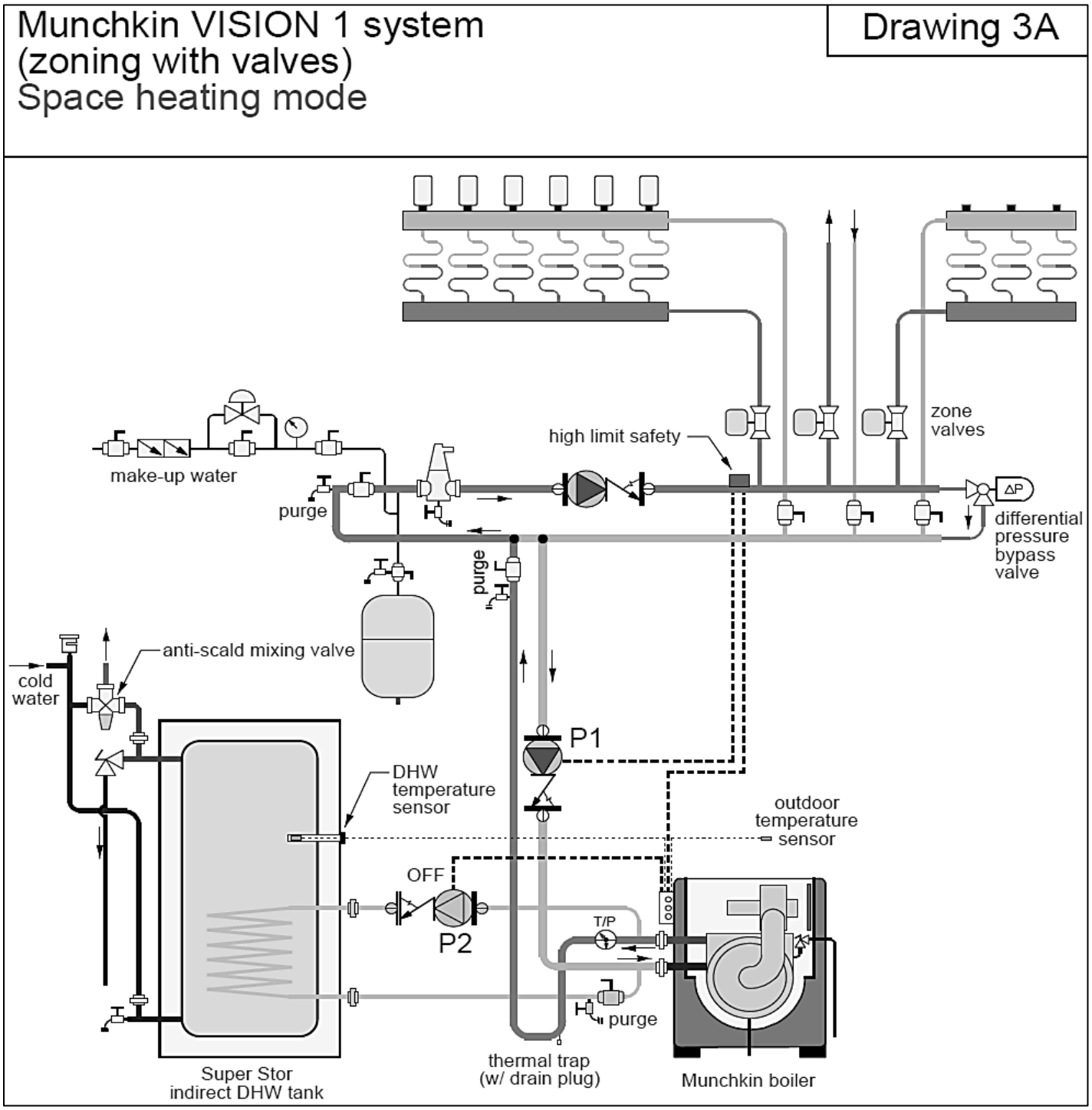

Figure 14

NOTES:

1. This drawing is meant to demonstrate system piping concept only. Installer is responsible for all equipment and detailing required by local codes.
2. Adjust differential pressure bypass valve to eliminate any flow velocity noise when zone with highest pressure drop operates by itself.
3. The **minimum** pipe size for connecting an indirect water heater is 1".
4. The **minimum** pipe size for connecting the unit is 1.25" and 2" for the 399.
5. Circulators are shown with isolation flanges. The alternative is standard flanges with full port ball valves. Purge valves can be used with the circulator flanges as an alternative.
6. The anti-scald mixing valve is recommended if the DHW temperature is set above the factory setting of 119ºF.
7. Install a minimum of 12 diameters of straight pipe upstream of all circulators.
8. A minimum of 6 pipe diameters of straight pipe shall be installed upstream and downstream of all closely spaced tees.
9. All closely spaced tees shall be within 4 pipe diameters center to center spacing.

Munchkin VISION 1 system (zoning with valves) Domestic water heating mode

Drawing 3B

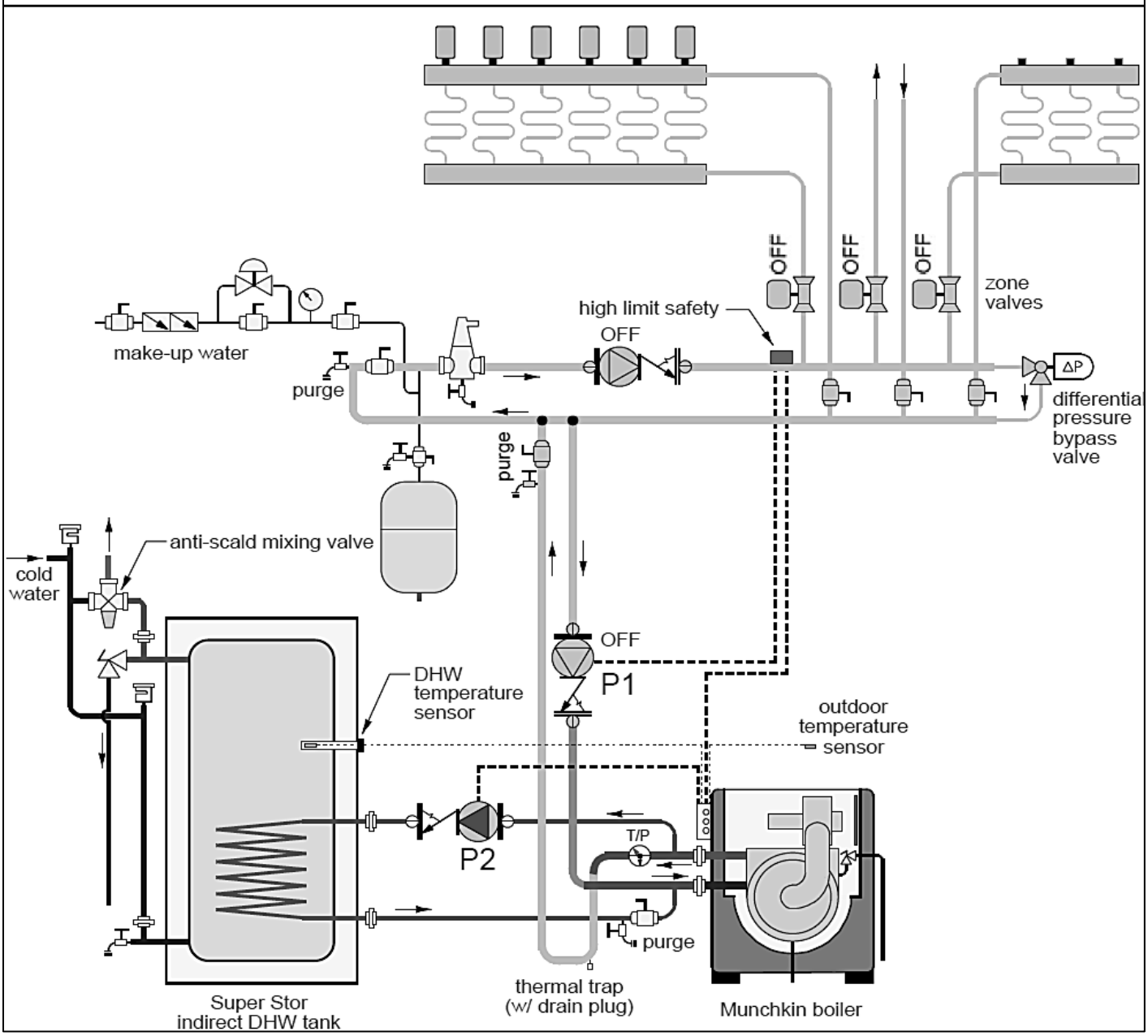

Figure 15

NOTES:
1. This drawing is meant to demonstrate system piping concept only. Installer is responsible for all equipment and detailing required by local codes.
2. Adjust differential pressure bypass valve to eliminate any flow velocity noise when zone with highest pressure drop operates by itself.
3. The **minimum** pipe size for connecting an indirect water heater is 1”.
4. The **minimum** pipe size for connecting the unit is 1.25” and 2” for the 399.
5. Circulators are shown with isolation flanges. The alternative is standard flanges with full port ball valves. Purge valves can be used with the circulator flanges as an alternative.
6. The anti-scald mixing valve is recommended if the DHW temperature is set above the factory setting of 119ºF.
7. Install a minimum of 12 diameters of straight pipe upstream of all circulators.
8. A minimum of 6 pipe diameters of straight pipe shall be installed upstream and downstream of all closely spaced tees.
9. All closely spaced tees shall be within 4 pipe diameters center to center spacing.

Munchkin VISION 1 system (zoning with valves) Space heating mode (w/ submixing)

Drawing 3C

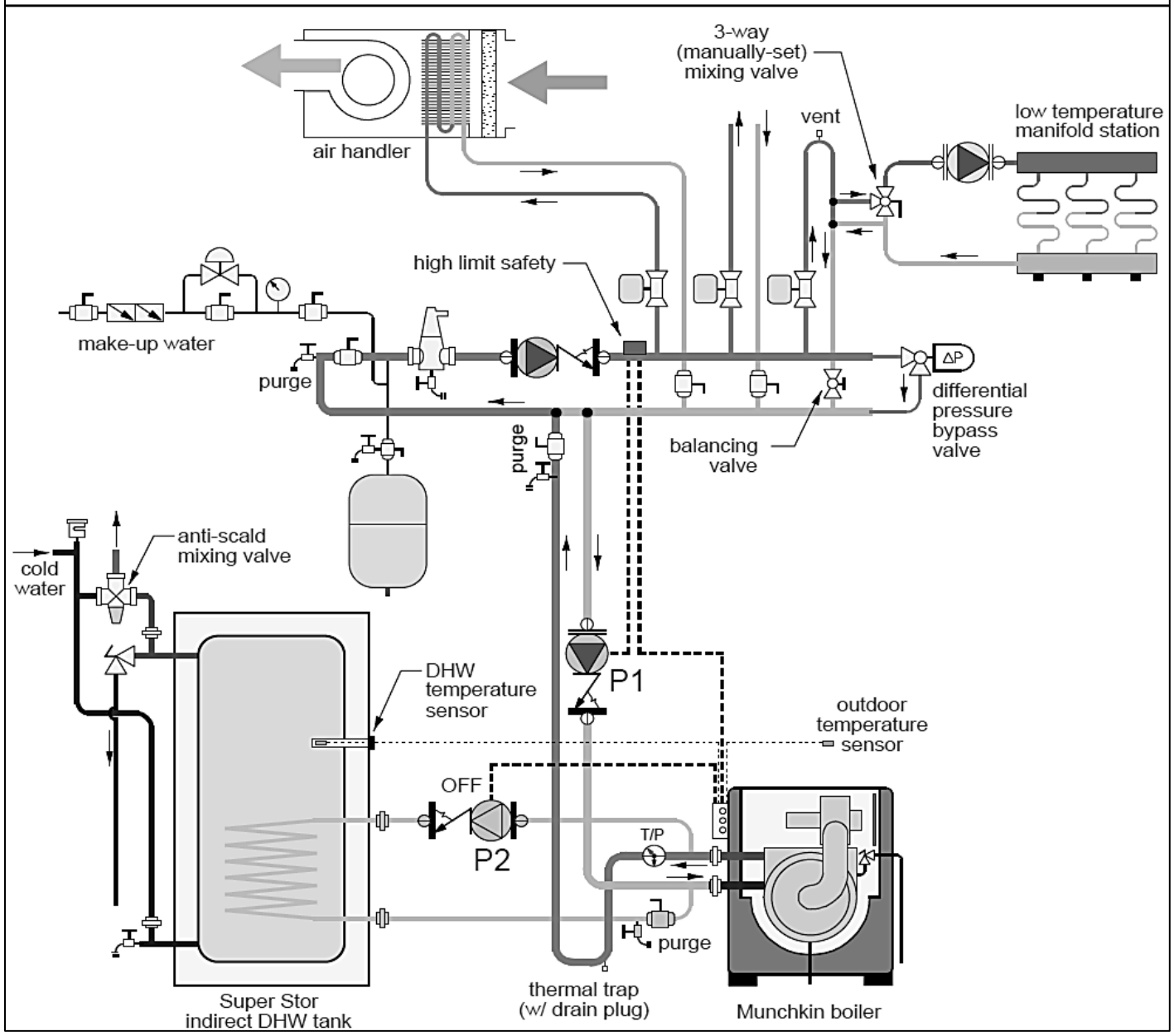

Figure 16

NOTES:

1. This drawing is meant to demonstrate system piping concept only. Installer is responsible for all equipment and detailing required by local codes.
2. Adjust differential pressure bypass valve to eliminate any flow velocity noise when zone with highest pressure drop operates by itself.
3. The **minimum** pipe size for connecting an indirect water heater is 1”.
4. The **minimum** pipe size for connecting the unit is 1.25” and 2” for the 399.
5. Circulators are shown with isolation flanges. The alternative is standard flanges with full port ball valves. Purge valves can be used with the circulator flanges as an alternative.
6. The anti-scald mixing valve is recommended if the DHW temperature is set above the factory setting of 119ºF.
7. Install a minimum of 12 diameters of straight pipe upstream of all circulators.
8. A minimum of 6 pipe diameters of straight pipe shall be installed upstream and downstream of all closely spaced tees.
9. All closely spaced tees shall be within 4 pipe diameters center to center spacing.
10. Adjust 3-way manually set mixing valve to yield proper supply temperature to lower temperature load.

Munchkin VISION 1 system (zoning with circulators) Space heating mode

Drawing 4A

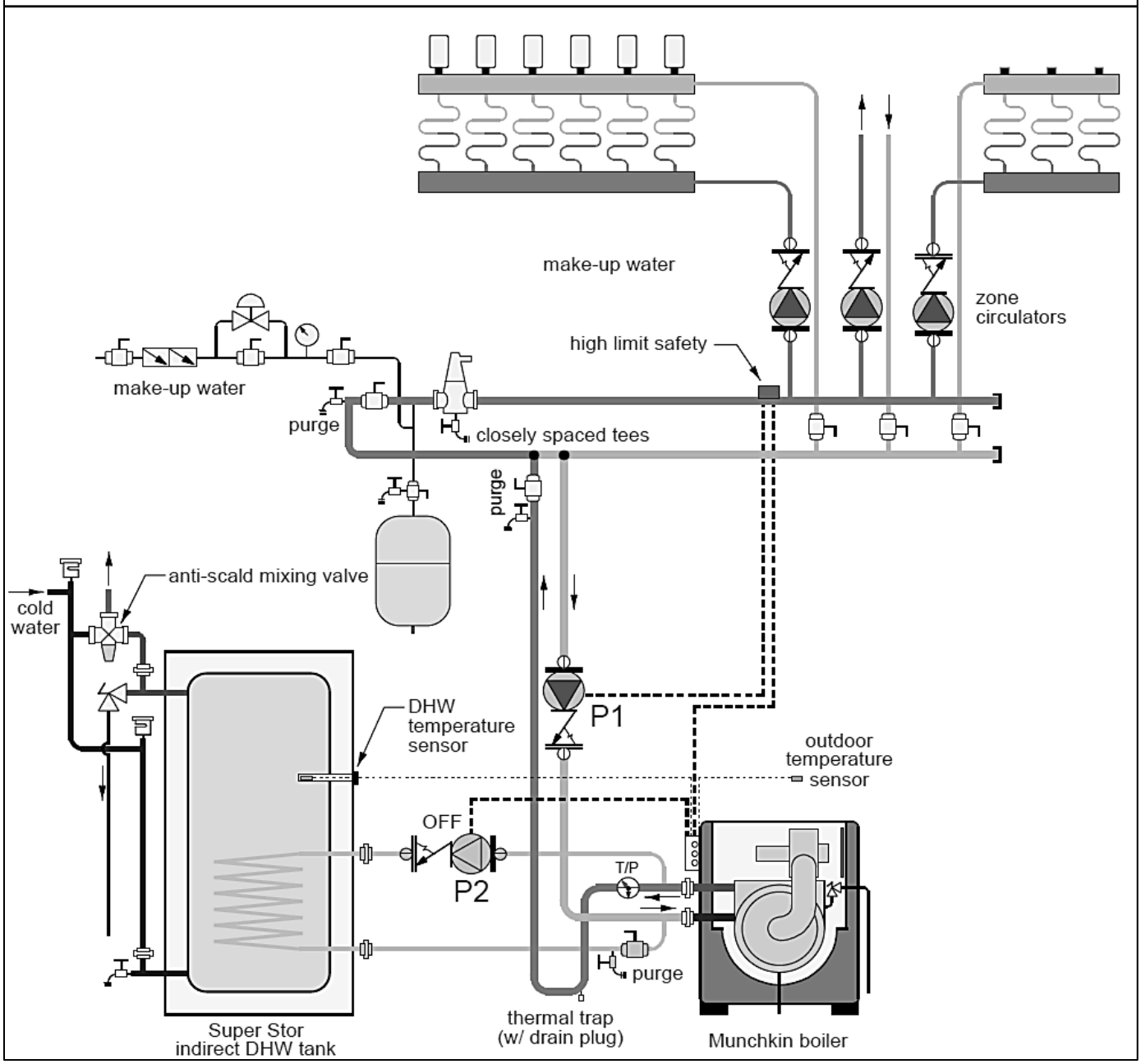

Figure 17

NOTES:
1. This drawing is meant to demonstrate system piping concept only. Installer is responsible for all equipment and detailing required by local codes.
2. Adjust differential pressure bypass valve to eliminate any flow velocity noise when zone with highest pressure drop operates by itself.
3. The **minimum** pipe size for connecting an indirect water heater is 1”.
4. The **minimum** pipe size for connecting the unit is 1.25” and 2” for the 399.
5. Circulators are shown with isolation flanges. The alternative is standard flanges with full port ball valves. Purge valves can be used with the circulator flanges as an alternative.
6. The anti-scald mixing valve is recommended if the DHW temperature is set above the factory setting of 119ºF.
7. Install a minimum of 12 diameters of straight pipe upstream of all circulators.
8. A minimum of 6 pipe diameters of straight pipe shall be installed upstream and downstream of all closely spaced tees.
9. All closely spaced tees shall be within 4 pipe diameters center to center spacing.

Munchkin VISION 1 system (zoning with circulators) Domestic water heating mode

Drawing 4B

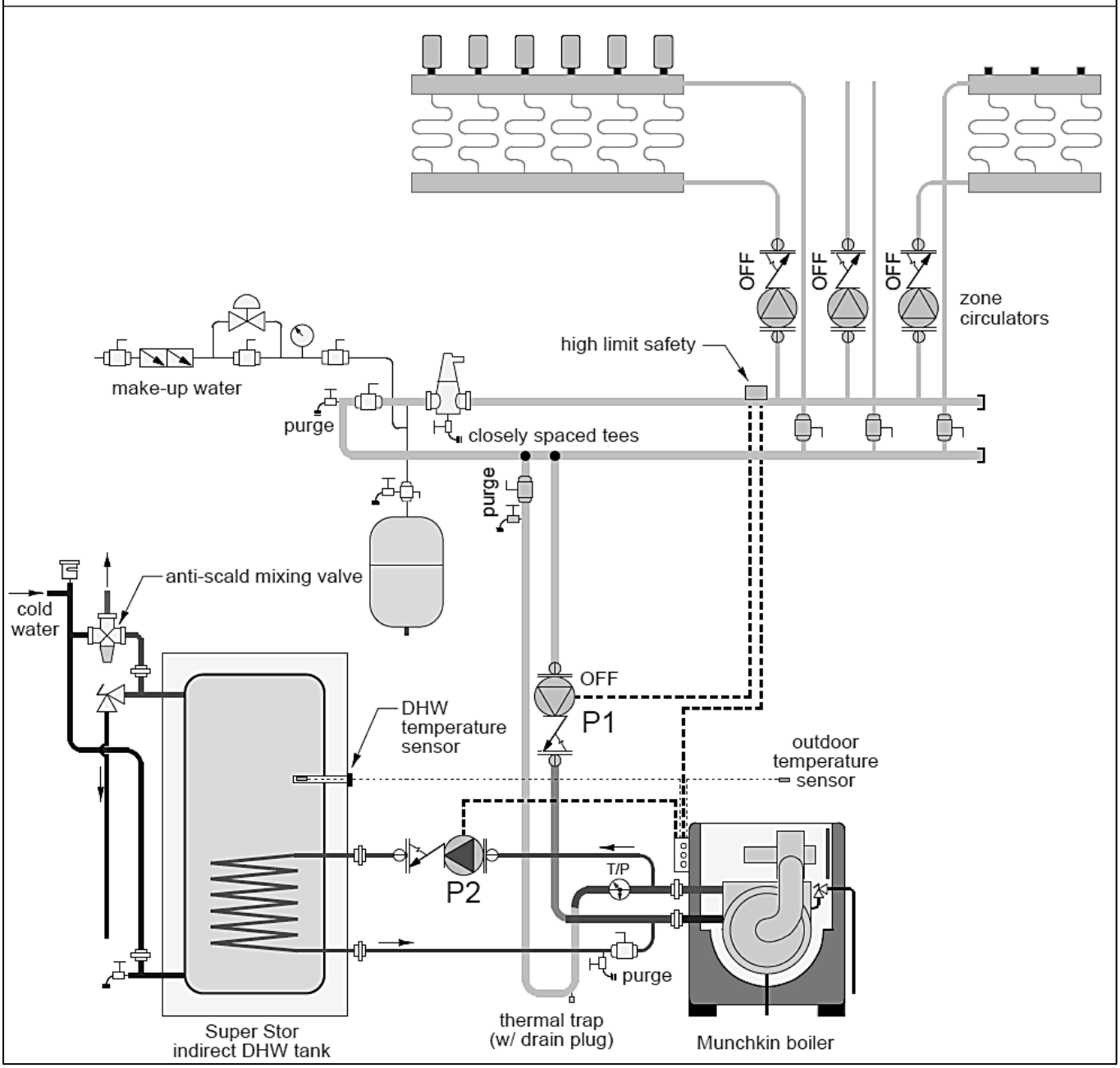

Figure 18

NOTES:
1. This drawing is meant to demonstrate system piping concept only. Installer is responsible for all equipment and detailing required by local codes.
2. Adjust differential pressure bypass valve to eliminate any flow velocity noise when zone with highest pressure drop operates by itself.
3. The **minimum** pipe size for connecting an indirect water heater is 1”.
4. The **minimum** pipe size for connecting the unit is 1.25” and 2” for the 399.
5. Circulators are shown with isolation flanges. The alternative is standard flanges with full port ball valves. Purge valves can be used with the circulator flanges as an alternative.
6. The anti-scald mixing valve is recommended if the DHW temperature is set above the factory setting of 119ºF.
7. Install a minimum of 12 diameters of straight pipe upstream of all circulators.
8. A minimum of 6 pipe diameters of straight pipe shall be installed upstream and downstream of all closely spaced tees.
9. All closely spaced tees shall be within 4 pipe diameters center to center spacing.

Munchkin VISION 1 system (zoning with circulators) Space heating mode (w/ submixing)

Drawing 4C

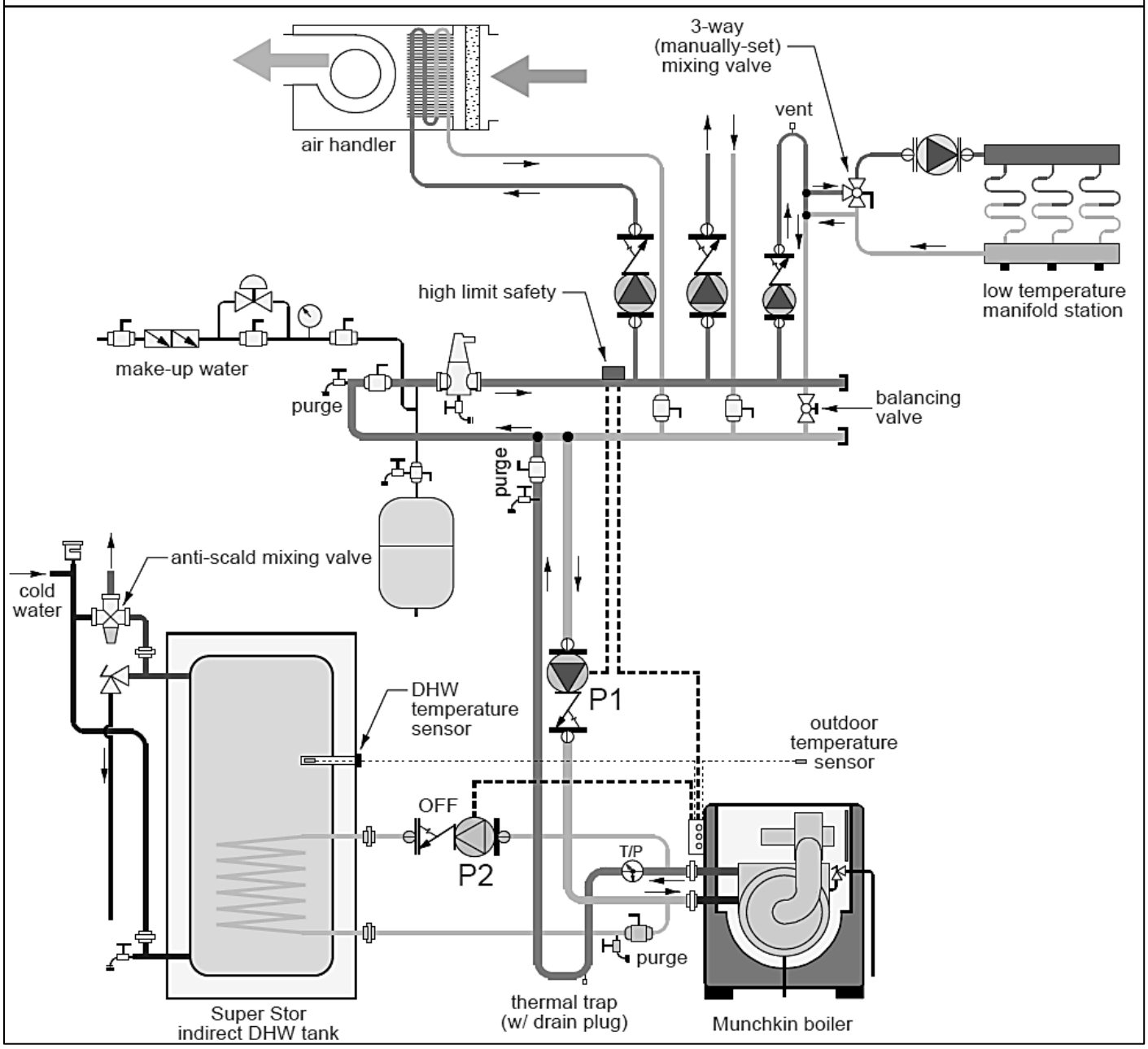

Figure 19

NOTES:
1. This drawing is meant to demonstrate system piping concept only. Installer is responsible for all equipment and detailing required by local codes.
2. Adjust differential pressure bypass valve to eliminate any flow velocity noise when zone with highest pressure drop operates by itself.
3. The **minimum** pipe size for connecting an indirect water heater is 1”.
4. The **minimum** pipe size for connecting the unit is 1.25” and 2” for the 399.
5. Circulators are shown with isolation flanges. The alternative is standard flanges with full port ball valves. Purge valves can be used with the circulator flanges as an alternative.
6. The anti-scald mixing valve is recommended if the DHW temperature is set above the factory setting of 119ºF.
7. Install a minimum of 12 diameters of straight pipe upstream of all circulators.
8. A minimum of 6 pipe diameters of straight pipe shall be installed upstream and downstream of all closely spaced tees.
9. All closely spaced tees shall be within 4 pipe diameters center to center spacing.

Munchkin VISION 1 system (zoning with circulators) Space heating mode (3 fully reset supply temperatures)

Drawing 4E

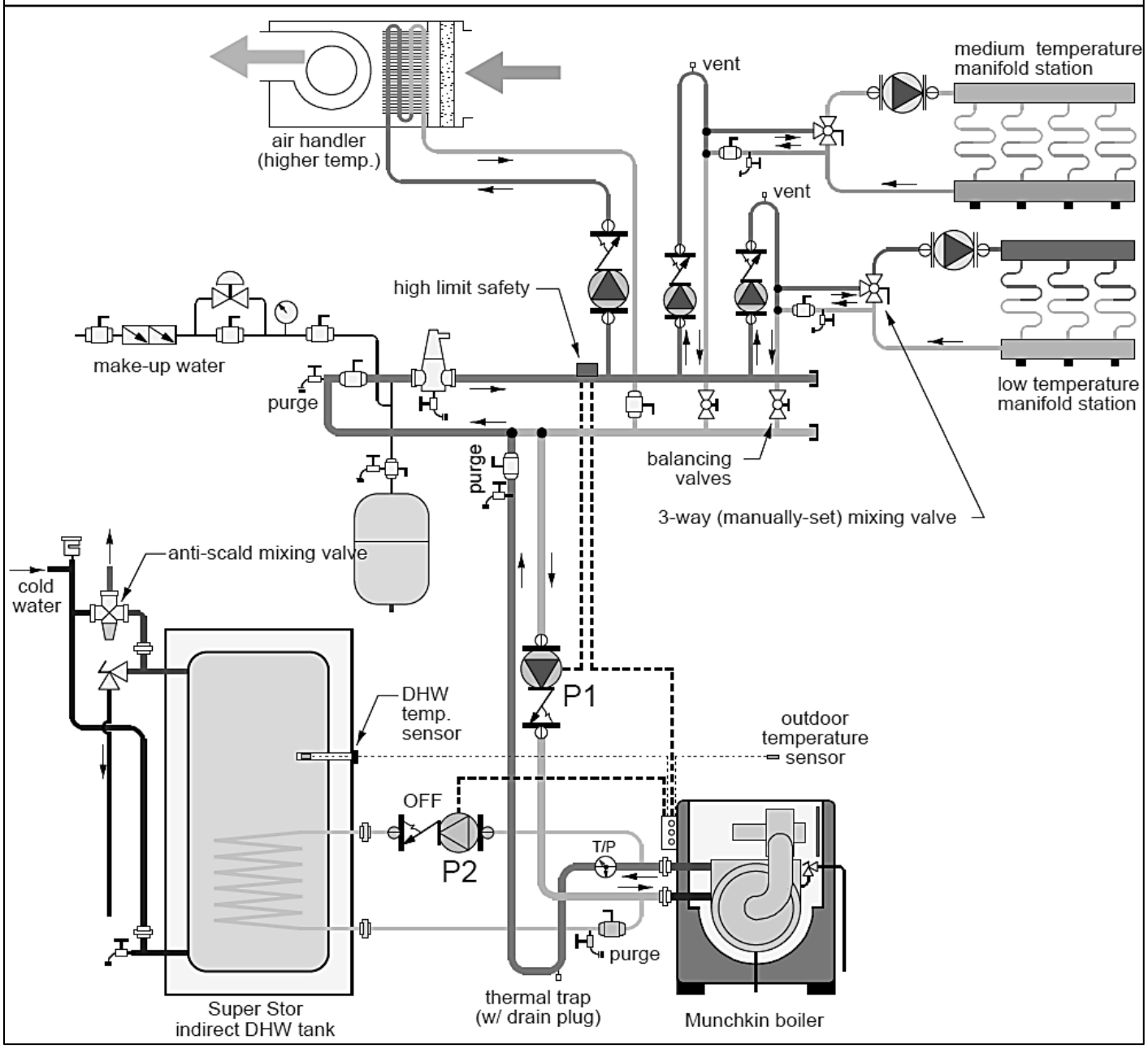

Figure 20

NOTES:
1. This drawing is meant to demonstrate system piping concept only. Installer is responsible for all equipment and detailing required by local codes.
2. Adjust differential pressure bypass valve to eliminate any flow velocity noise when zone with highest pressure drop operates by itself.
3. The **minimum** pipe size for connecting an indirect water heater is 1”.
4. The **minimum** pipe size for connecting the unit is 1.25” and 2” for the 399.
5. Circulators are shown with isolation flanges. The alternative is standard flanges with full port ball valves. Purge valves can be used with the circulator flanges as an alternative.
6. The anti-scald mixing valve is recommended if the DHW temperature is set above the factory setting of 119ºF.
7. Install a minimum of 12 diameters of straight pipe upstream of all circulators.
8. A minimum of 6 pipe diameters of straight pipe shall be installed upstream and downstream of all closely spaced tees.
9. All closely spaced tees shall be within 4 pipe diameters center to center spacing.

Munchkin VISION 1 system (zoning with circulators) Space heating mode (3 different supply temperatures)

Drawing 4F

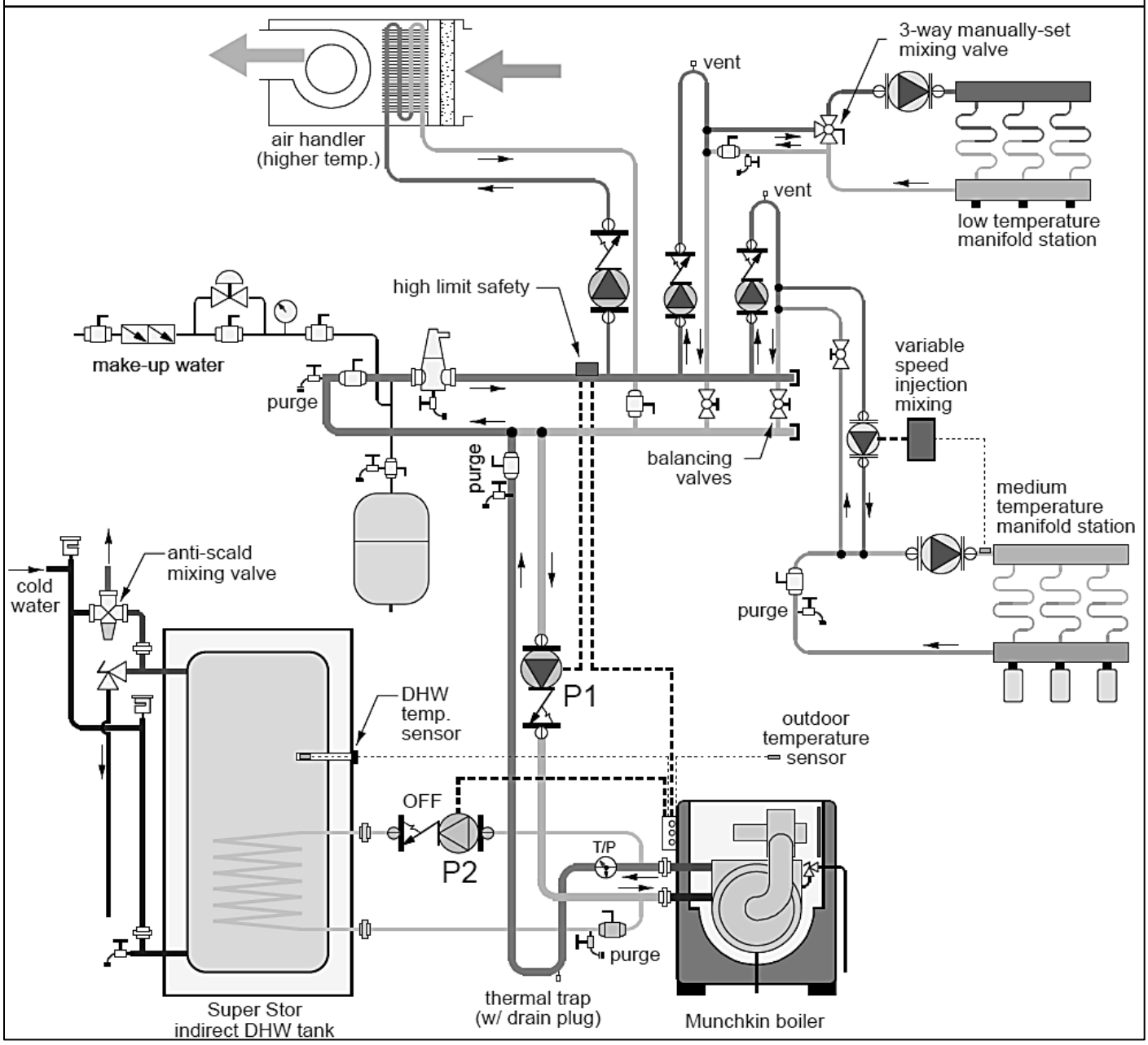

Figure 21

NOTES:
1. This drawing is meant to demonstrate system piping concept only. Installer is responsible for all equipment and detailing required by local codes.
2. Adjust differential pressure bypass valve to eliminate any flow velocity noise when zone with highest pressure drop operates by itself.
3. The **minimum** pipe size for connecting an indirect water heater is 1”.
4. The **minimum** pipe size for connecting the unit is 1.25” and 2” for the 399.
5. Circulators are shown with isolation flanges. The alternative is standard flanges with full port ball valves. Purge valves can be used with the circulator flanges as an alternative.
6. The anti-scald mixing valve is recommended if the DHW temperature is set above the factory setting of 119ºF.
7. Install a minimum of 12 diameters of straight pipe upstream of all circulators.
8. A minimum of 6 pipe diameters of straight pipe shall be installed upstream and downstream of all closely spaced tees.
9. All closely spaced tees shall be within 4 pipe diameters center to center spacing.

Munchkin VISION 1 system

Drawing 4G

Multiple high temperature priority loads controlled with zone valves

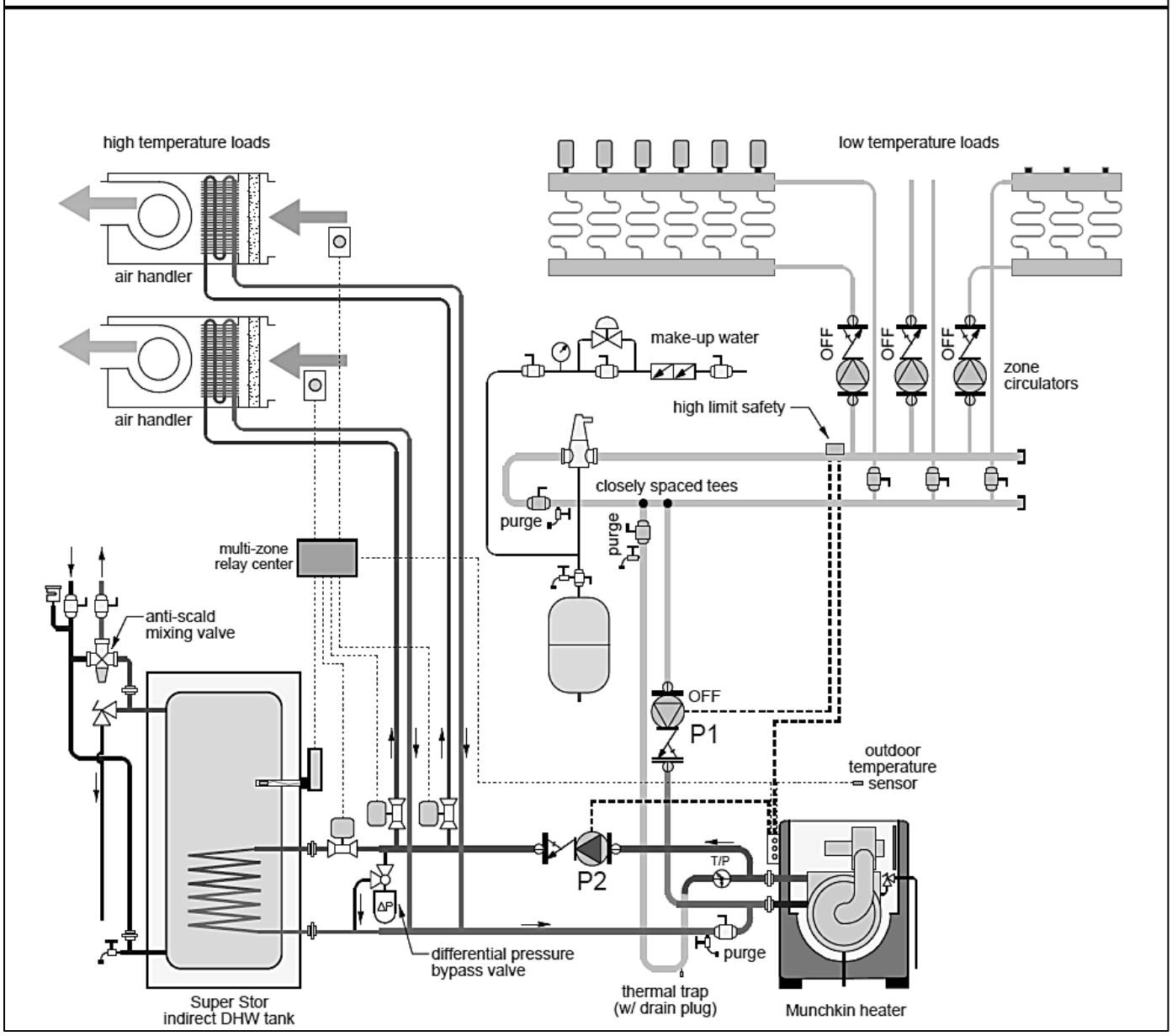

Figure 22

NOTES:
1. This drawing is meant to demonstrate system piping concept only. Installer is responsible for all equipment and detailing required by local codes.
2. Adjust differential pressure bypass valve to eliminate any flow velocity noise when zone with highest pressure drop operates by itself.
3. The **minimum** pipe size for connecting an indirect water heater is 1”.
4. The **minimum** pipe size for connecting the unit is 1.25” and 2” for the 399.
5. Circulators are shown with isolation flanges. The alternative is standard flanges with full port ball valves. Purge valves can be used with the circulator flanges as an alternative.
6. The anti-scald mixing valve is recommended if the DHW temperature is set above the factory setting of 119ºF.
7. Install a minimum of 12 diameters of straight pipe upstream of all circulators.
8. A minimum of 6 pipe diameters of straight pipe shall be installed upstream and downstream of all closely spaced tees.
9. All closely spaced tees shall be within 4 pipe diameters center to center spacing.
10. High temperature loads cannot operate simultaneously with low temperature loads.
11. Supply water temperature to high temperature loads is not reset based on outdoor temperature.
12. Domestic water heating is highest priority load, and controlled through priority zone of multi-zone relay center.

Munchkin VISION 1 system
Multiple high temperature priority loads controlled with zone circulators
Multiple low temperature load controls with zone circulators

Drawing 4H

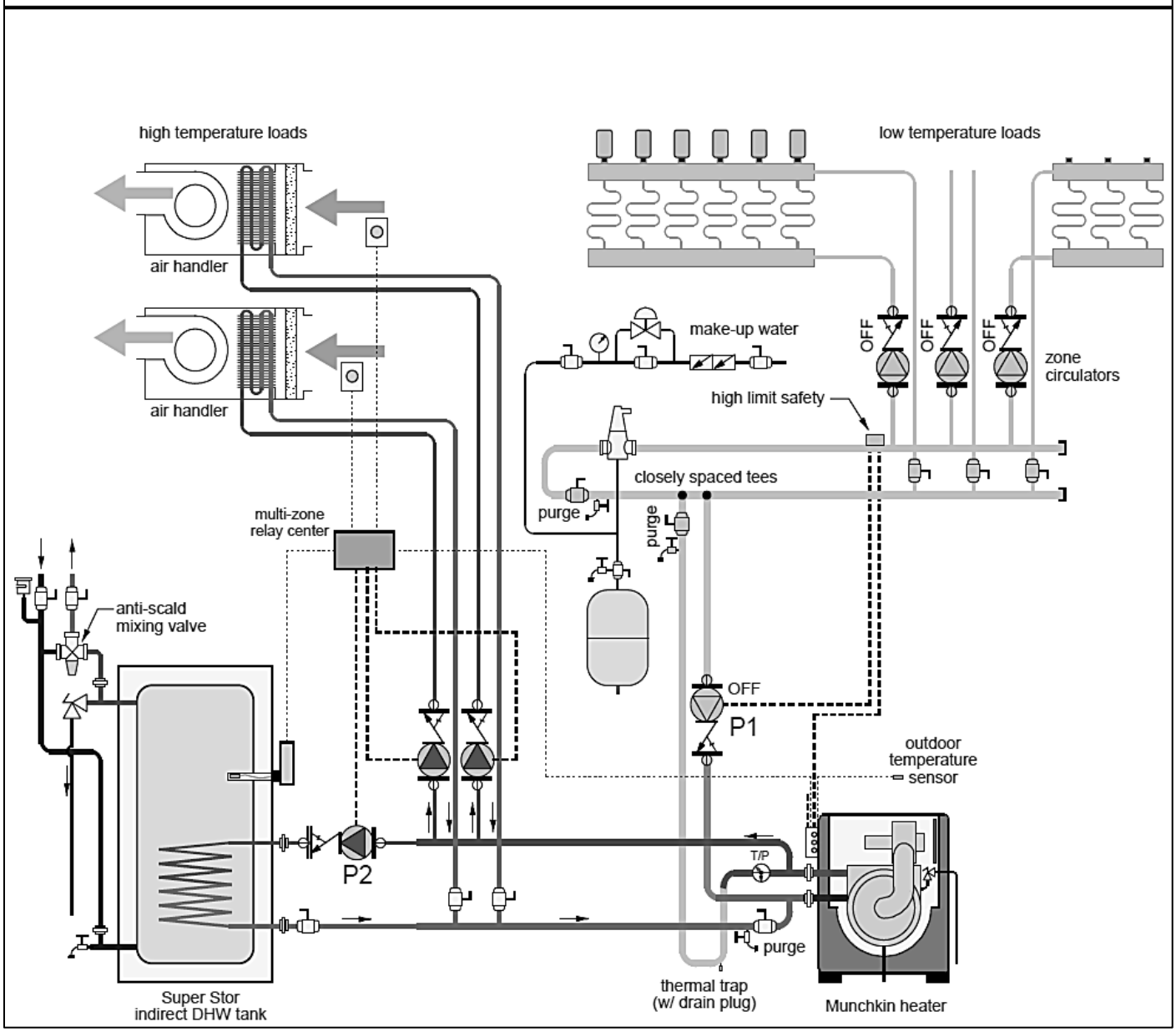

Figure 23

NOTES:
1. This drawing is meant to demonstrate system piping concept only. Installer is responsible for all equipment and detailing required by local codes.
2. Adjust differential pressure bypass valve to eliminate any flow velocity noise when zone with highest pressure drop operates by itself.
3. The **minimum** pipe size for connecting an indirect water heater is 1”.
4. The **minimum** pipe size for connecting the unit is 1.25” and 2” for the 399.
5. Circulators are shown with isolation flanges. The alternative is standard flanges with full port ball valves. Purge valves can be used with the circulator flanges as an alternative.
6. The anti-scald mixing valve is recommended if the DHW temperature is set above the factory setting of 119ºF.
7. Install a minimum of 12 diameters of straight pipe upstream of all circulators.
8. A minimum of 6 pipe diameters of straight pipe shall be installed upstream and downstream of all closely spaced tees.
9. All closely spaced tees shall be within 4 pipe diameters center to center spacing.
10. High temperature loads cannot operate simultaneously with low temperature loads.
11. Supply water temperature to high temperature loads is not reset based on outdoor temperature.
12. Domestic water heating is highest priority load, and controlled through priority zone of multi-zone relay center.

PART 7 – VENTING, COMBUSTION AIR, AND CONDENSATE REMOVAL

⚠ DANGER

The boiler must be vented as detailed in this Venting Section. Ensure exhaust vent and intake piping complies with these instructions regarding vent system. Inspect finished exhaust vent and intake piping thoroughly to ensure all joints are well secured, airtight, and comply with all applicable code requirements, as well as with the instructions provided in this manual. Failure to properly install the vent system will result in property damage, severe personal injury, or death.

A. GENERAL

⚠ DANGER

This boiler is certified as a "Category IV" appliance, and requires a special venting system. The vent system will operate with a positive pressure in the pipe. Exhaust gases must be piped directly outdoors using the vent materials and rules outlined in these instructions. Do not connect vent connectors serving appliances vented by natural draft into any portion of mechanical draft systems operating under positive pressure. Follow the venting instructions below carefully. Failure to do so will result in substantial property damage, severe personal injury, or death.

1. Installation should be made in accordance with the regulations of the Authority Having Jurisdiction, local code authorities, and utility companies which pertain to this type of water heating equipment.

2. Install the venting system in accordance with these instructions and with the National Fuel Gas Code, ANSI Z223.1/NFPA 54, CAN/CGA B149, and/or applicable provisions of local building codes.

3. This boiler must be vented with materials, components, and systems listed and approved for Category IV appliances.

⚠ DANGER

Exhaust vent and intake pipes are to be piped separately, and MUST exit from the same side of the building to ensure safe, correct boiler operation. This boiler cannot share a common exhaust or intake with multiple appliances. Failure to follow this instruction will result in substantial property damage, severe personal injury, or death.

NOTE: To avoid contamination often contained in indoor air, it is best to pipe all intake combustion air directly to the outdoors.

⚠ WARNING

Improper seating of vent pipe gaskets can cause eventual gasket failure and exhaust gas leakage. Ensure the exhaust vent pipe is properly beveled and seated before insertion into the flue adapter. Failure to do so could result in property damage, severe personal injury, or death.

⚠ DANGER

Due to the extreme flammability of most glues, cements, solvents, and primers used to join plastic exhaust vent and intake pipes, explosive solvent vapors must be cleared from all vent piping before start-up. Avoid using excess cement or primer, as this may pool in the vent pipes. Vent assemblies should be allowed to cure for a period of at least 8 hours before powering a connected appliance. Failure to follow these instructions will result in substantial property damage, severe personal injury, or death. It is the installers' responsibility to understand the hazards associated with explosive solvents and take the necessary precautions to avoid these risks.

B. APPROVED MATERIALS FOR EXHAUST VENT AND INTAKE PIPE

APPROVED EXHAUST VENT AND INTAKE PIPE MATERIAL			
Item	**Material**	**Standards for Installation in:**	
		United States	**Canada***
Exhaust vent or Intake pipe and fittings	PVC schedule 40/80	ANSI/ASTM D1785	PP, CPVC, and PVC venting must be ULC-S636 Certified. IPEX is an approved manufacturer in Canada, supplying vent material listed to ULC-S636.
	PVC-DWV*	ANSI/ASTM D2665*	
	CPVC schedule 40/80	ANSI/ASTM F441	
	Polypropylene	ULCS636	
	Stainless Steel AL29-4C	Certified for Category IV and direct vent appliance venting	Certified for Category IV and direct vent appliance venting
Pipe cement/primer	PVC	ANSI/ASTM D2564	IPEX System 636 Cements & Primers
	CPVC	ANSI/ASTM F493	

Table 4

⚠ DANGER

- The exhaust and intake components installed with this boiler must be used for near boiler piping BEFORE transitioning to the approved materials listed above. DO NOT REMOVE these installed components. Doing so WILL VOID appliance warranty.
- PVC/CPVC pipe and fittings of the same diameter are considered interchangeable.
- Do NOT use Foam Core Pipe in any portion of the exhaust piping from this boiler.
- DO NOT connect PVC/CPVC to PP without an approved vent connector.
- When installing AL29-4C vent piping, install a PVC-to-stainless adapter at the boiler vent connection, and at the termination when using an HTP PVC termination kit. DO NOT mix AL-29-4C piping from different manufacturers unless using adapters specifically designed for the purpose by the manufacturer.
- *PVC-DWV for air intake applications ONLY.

Failure to follow these directions will result in substantial property damage, severe personal injury, or death.

⚠ WARNING

DO NOT mix components from different venting systems. The vent system could fail, causing leakage of flue products into the living space. Use only the approved pipe and fitting materials, and primer and cement specifically designed for the material used, as listed in Table 4. Failure to do so could result in property damage, severe personal injury, or death.

⚠ WARNING

Exhaust vent adaptors are not designed as load-bearing devices, and must not be used to support exhaust vent piping. All vent pipes must be glued, properly supported, and the exhaust must be pitched a minimum of ¼" per foot back to the boiler to allow drainage of condensate. Failure to properly support vent piping and follow the information in this statement could result in product damage, severe personal injury, or death.

NOTE: The use of double-wall vent or insulated material for the combustion air inlet pipe is recommended in cold climates to prevent the condensation of airborne moisture in the incoming combustion air.

C. REQUIREMENTS FOR INSTALLATION IN CANADA

1. Installations must be made with a vent pipe system certified to ULC-S636. IPEX is an approved vent manufacturer in Canada supplying vent material listed to ULC-S636. Additionally you may use AL29-4C stainless steel venting to comply with Canadian requirements.

2. The first three (3) feet of vent pipe from the boiler flue outlet must be readily accessible for visual inspection.

3. The components of the certified vent system must not be interchanged with other vent systems or unlisted pipe / fittings.

Cellular foam core piping may be used on air inlet piping **only**.

⚠ DANGER

You must not use "B" vent in an exhaust application. "B" vent is for intake applications **ONLY**. Using "B" vent in an exhaust application will result in serious injury or death.

D. EXHAUST VENT AND INTAKE PIPE LOCATION

NOTE: SEE ADDITIONAL REQUIREMENTS FOR MASSACHUSETTS IN THE BACK OF THIS MANUAL.

1. DETERMINE EXHAUST VENT LOCATION

a. The vent piping for this boiler is approved for zero clearance to combustible construction.
b. See illustration within this section of clearances for location of exit terminals of direct-vent venting systems.
c. This boiler vent system shall terminate at least 3 feet (0.9 m) above any forced air intake located within 10 ft (3 m). Note: this does not apply to the combustion air intake of a direct-vent appliance.
d. Provide a minimum of 1 foot distance from any door, operable window, or gravity intake into any building.
e. Provide a minimum of 1 foot clearance from the bottom of the exhaust above the expected snow accumulation level. Snow removal may be necessary to maintain clearance.
f. Provide 4 feet horizontal clearance from electrical meters, gas meters, gas regulators, relief equipment, exhaust fans and inlets. In no case shall the exit terminal be above or below the aforementioned equipment unless the 4 foot horizontal distance is maintained.
g. Do not locate exhaust over public walkways where condensate could drip and / or freeze and create a nuisance or hazard.
h. When adjacent to a public walkway, locate exit terminal at least 7 feet above grade.
i. Do not locate the exhaust directly under roof overhangs to prevent icicles from forming.
j. Provide 4 feet clearance from the inside corner of vertical walls, chimneys, etc., as well as horizontal corners created by roof overhangs.

2. DETERMINE INTAKE PIPE LOCATION

a. Provide 1 foot clearance from the bottom of the intake pipe and the level of maximum snow accumulation. Snow removal may be necessary to maintain clearances.
b. Do not locate intake pipe in a parking area where machinery may damage the pipe.
c. When venting with a two pipe system, maximum distance between exhaust vent and intake pipe is 6 feet (1.8 m). Minimum distance between exhaust vent and intake pipe on single boiler is 10” (0.255 m) center-to-center. Minimum distance between exhaust vents and intake pipes on multiple boilers is 10” (0.255 m) center-to-center.

NOTE: Due to potential moisture build-up, sidewall venting may not be the preferred venting option. To save time and cost, carefully consider venting installation and location.

⚠ WARNING

The building owner is responsible for keeping the exhaust and intake terminations free of snow, ice, or other potential blockages, as well as scheduling routine maintenance. Failure to keep the vent piping terminations clear and properly maintain the boiler could result in property damage, severe personal injury, or death.

⚠ WARNING

For each floor containing bedroom(s), a carbon monoxide detector and alarm shall be placed in the living area outside the bedrooms, as well as in the room that houses the boiler. Detectors and alarms shall comply with NFPA 720 (latest edition). Failure to comply with requirements for detectors and alarms could result in property damage, severe personal injury, or death.

3. Determine location of condensate piping:

This is a high efficiency boiler, and therefore produces condensate: a by-product of the combustion process. Condensate is nothing more than water vapor derived from combustion products, and is similar to that of an automobile when it is initially started.

It is very important that the condensate line is sloped away from the boiler to a suitable drain. If the boiler condensate outlet is lower than the drain, a condensate pump (kit p/n 554200 available from HTP) must be used.

NOTE: The use of ½” PVC or CPVC pipe are acceptable materials for condensate piping. Steel, brass, copper or other materials will be subject to corrosion or deterioration. However, use materials approved by the authority having jurisdiction.

In the absence of other authority, PVC and CPVC pipe must comply with ASTM D1785 or D2845. Cement and primer must comply with ASME D2564 or F493. For Canada, use CSA or ULC certified PVC or CPVC pipe, fittings, and cement. If pipe is used, deburr and chamfer pipe to allow proper mating to the drainage assembly.

NOTE: To allow for proper drainage on long horizontal runs, a second line vent may be required and tubing size may need to increase to 1”. Support of the condensate line may be necessary to avoid blockage of the condensate flow. Failure to add a second vacuum break could result in condensate backup, improper boiler operation, and nuisance shutdowns.

NOTE: Check with your local gas company to determine if combustion condensate disposal is permitted in your area. In the state of Massachusetts, condensate must be neutralized before entering a drain.

4. Condensate neutralization

Condensate from the boiler is slightly acidic with a pH of 3.2 - 4.5. To avoid long term damage to the drainage system and to meet local code requirements, HTP recommends neutralizing the condensate with a Condensate Neutralizer Kit (p/n 7450P-218). The neutralizer kit connects to the drain system and contains limestone chips that neutralize the pH level of the water vapor. The neutralizer kit should be checked annually and the limestone chips replenished if necessary. When replacing the limestone chips, take care to ensure chips are no smaller than ½” to avoid blockage in condensate piping (for piping details, refer to condensate neutralizer installation instruction.)

CAUTION

If using a condensate pump, select one approved for use with condensing boilers and furnaces. The pump should have an overflow switch to prevent property damage from condensate spillage.

CAUTION

It is very important that the condensate piping be no smaller than ¾”. To prevent sagging and maintain pitch, condensate piping should be supported with pipe supports, and pitched ¼” per foot to allow for proper drainage.

CAUTION

The condensate line must remain unobstructed, allowing free flow of condensate. If condensate freezes in the line, or if line is obstructed in any other manner, condensate can exit from the tee, resulting in potential water damage to property.

E. EXHAUST VENT AND INTAKE PIPE SIZING

1. The exhaust vent and intake pipe size is 2" for the T50/80, 3” for the 80/140/199M, and 4” for the 399M.

2. The total equivalent length of exhaust vent and intake pipe should **not exceed 85’**.
   a. The equivalent length of elbows, tees, and other fittings are listed in the Friction Loss Table below:

FRICTION LOSS EQUIVALENT IN PIPING AND FITTINGS				
FITTINGS OR PIPING	EQUIVALENT FEET			
	2”	3”	4”	6”
90 DEGREE ELBOW*	5’	5’	3’	3’
45 DEGREE ELBOW	3’	3’	1’	1’
COUPLING	0’	0’	0’	0’
AIR INLET TEE	0’	0’	0’	0’
STRAIGHT PIPE	1’	1’	1’	1’
CONCENTRIC VENT KIT	3’	3’	N/A	N/A
V500 2” VENT KIT	1’	N/A	N/A	N/A
V1000 3” VENT KIT	N/A	1’	1’	1’
V2000 4” VENT KIT	N/A	1’	1’	1’

Table 5 - *Friction loss for long radius elbow is 1 foot less. NOTE: Consult Polypropylene venting instructions for friction loss and pressure drop equivalents.

   b. For example: If the exhaust vent has two 90° elbows and 10 feet of PVC pipe we will calculate:
      Exhaust Vent Equivalent Length = (2 x 5) + 10 = 20 feet.
   Further, if the intake pipe has two 90° elbows, one 45° elbow and 10 feet of PVC pipe, the following calculation applies:
      Intake Pipe Equivalent Length = (2 x 5) + 3 + 10 = 23 feet.
   Finally, if a concentric vent kit is used we find:
      Total Equivalent Length = 20 + 23 + 3 = 46 feet.
   The total equivalent length is 46 feet, which is well below the maximum of 85 feet.
   c. The exhaust vent and intake pipe are intended to penetrate the same wall or roof of the building.
   d. Effort should be made to keep a minimum difference in equivalent length between the exhaust vent and intake pipe.

3. The minimum total equivalent length is 32 equivalent feet.

G. LONGER VENT RUNS

The maximum total equivalent length can be extended by increasing the diameter of both exhaust vent and intake pipe equally. However, the transitions should begin a minimum of 15 equivalent feet from the boiler.
   a. Transitions should always be made in vertical sections of pipe to prevent the condensate from pooling in the vent pipe.
   b. The maximum equivalent length for increased diameter vent pipes is 125 feet.

VENT CONNECTION	REDUCING COUPLING	VENT TRANSITION
2”	3” X 2”	3”
3”	4” X 3”	4”
4”	6” X 4”	6”

Table 6 – Reducing Couplings

   c. If the transition occurs at a distance greater than 15 equivalent feet from the boiler, the maximum equivalent length will be reduced. See Table 7. The standard vent pipe is 2”.

TRANSITION POINT (FT. FROM BOILER)	TEL OF STANDARD 2” VENT PIPE (FT.)	TEL OF OVERSIZED 2”, 3”, OR 4” VENT PIPE (FT.)	MAXIMUM TEL OF ALL VENT PIPE (FT.)
15	30	95	125
20	40	77-1/2	117-1/2
25	50	60-1/2	110-1/2
30	60	43	103
35	70	26	96
40	80	8-1/2	88-1/2
NONE	85	0	85

Table 7

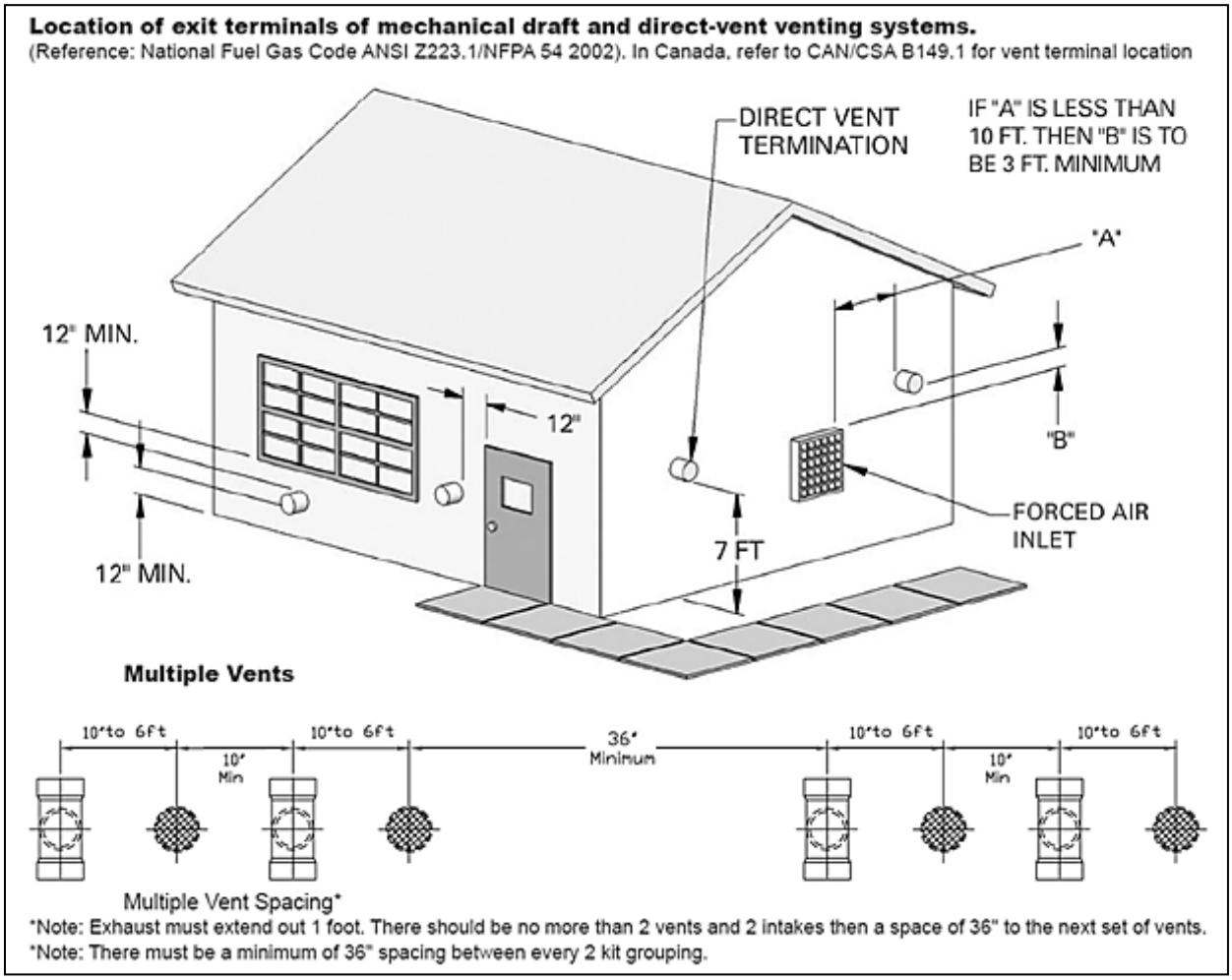

Figure 24

H. EXHAUST VENT AND INTAKE PIPE INSTALLATION

1. Use only solid PVC or CPVC pipe, AL29-4C Stainless Steel, or a Polypropylene vent system approved for use with Category IV appliances. FOAM CORE PIPING IS NOT APPROVED.

⚠ WARNING

All joints of positive pressure vent systems must be sealed completely to prevent leakage of flue products into living space.

2. Remove all burrs and debris from joints and fittings.

3. When using PVC or CPVC pipe, all joints must be properly cleaned, primed, and cemented. Use only cement and primer approved for use with the pipe material. Cement must conform to ASTM D2564 for PVC and ASTM F493 for CPVC pipe. **NOTE: DO NOT CEMENT POLYPROPYLENE PIPE.**

4. Ensure the vent is located where it will not be exposed to prevailing winds.

5. In all roof venting applications, exhaust discharge must point away from the pitch of the roof.

6. To prevent water leakage, install adequate roof flashing where the pipe enters the roof.

7. Do not locate vent over public walkways, driveways, or parking lots. Condensate could drip and freeze, resulting in a slip hazard or damage to vehicles and machinery.

8. Due to potential moisture build-up, sidewall venting may not be the preferred venting option. To save time and cost, carefully consider venting installation and location.

9. Horizontal lengths of exhaust vent must slope back towards the boiler not less than ¼" per foot to allow condensate to drain from the vent pipe.

10. The exhaust vent must terminate where vapors cannot make accidental contact with people or pets, or damage shrubs or plants.

11. In vacant chimney applications, install and seal a rain cap over existing chimney openings.

12. All piping must be fully supported. Use pipe hangers at a minimum of 4 foot intervals to prevent sagging of the pipe where condensate may form.

13. Do not use the boiler to support any piping.

14. A screened straight coupling is provided with the boiler for use as an outside exhaust termination.

15. A screened inlet air tee is provided with the boiler to be used as an outside intake termination.

The following information on Table 8 lists optional exhaust/intake terminations available from HTP.

DESCRIPTION	STOCK CODE
2” PVC CONCENTRIC VENT TERMINATION KIT	KGAVT0501CVT
3” PVC CONCENTRIC VENT TERMINATION KIT	KGAVT0601CVT
2” STAINLESS STEEL VENT TERMINATION KIT	V500
3” STAINLESS STEEL VENT TERMINATION KIT	V1000
4” STAINLESS STEEL VENT TERMINATION KIT	V2000
3” POLYPRO VENT KIT	8400P-001

Table 8

I. DIAGRAMS FOR SIDEWALL VENTING

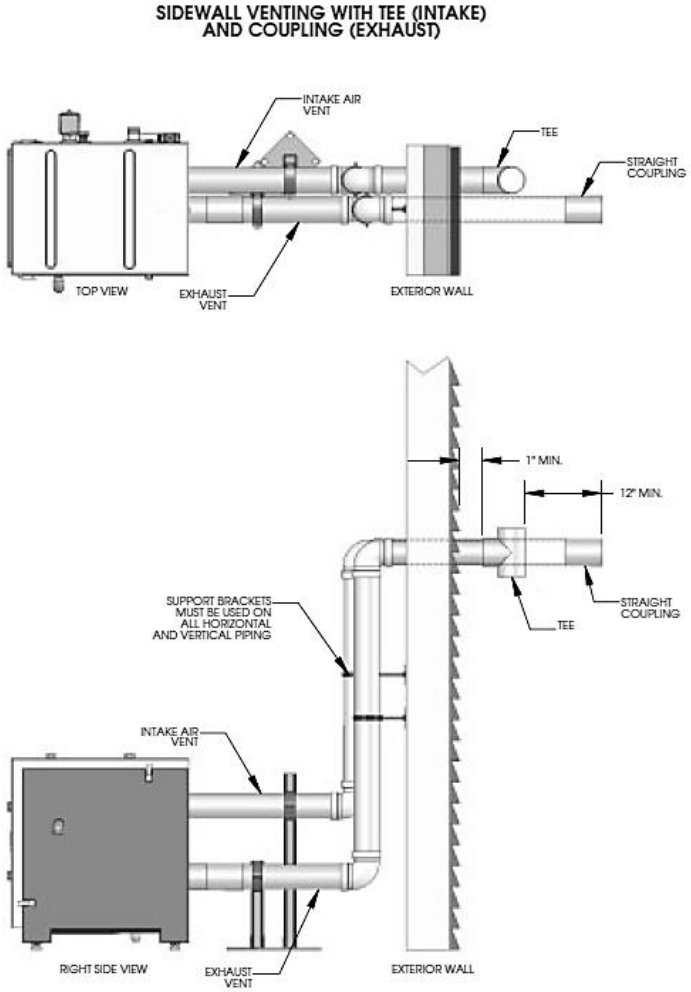

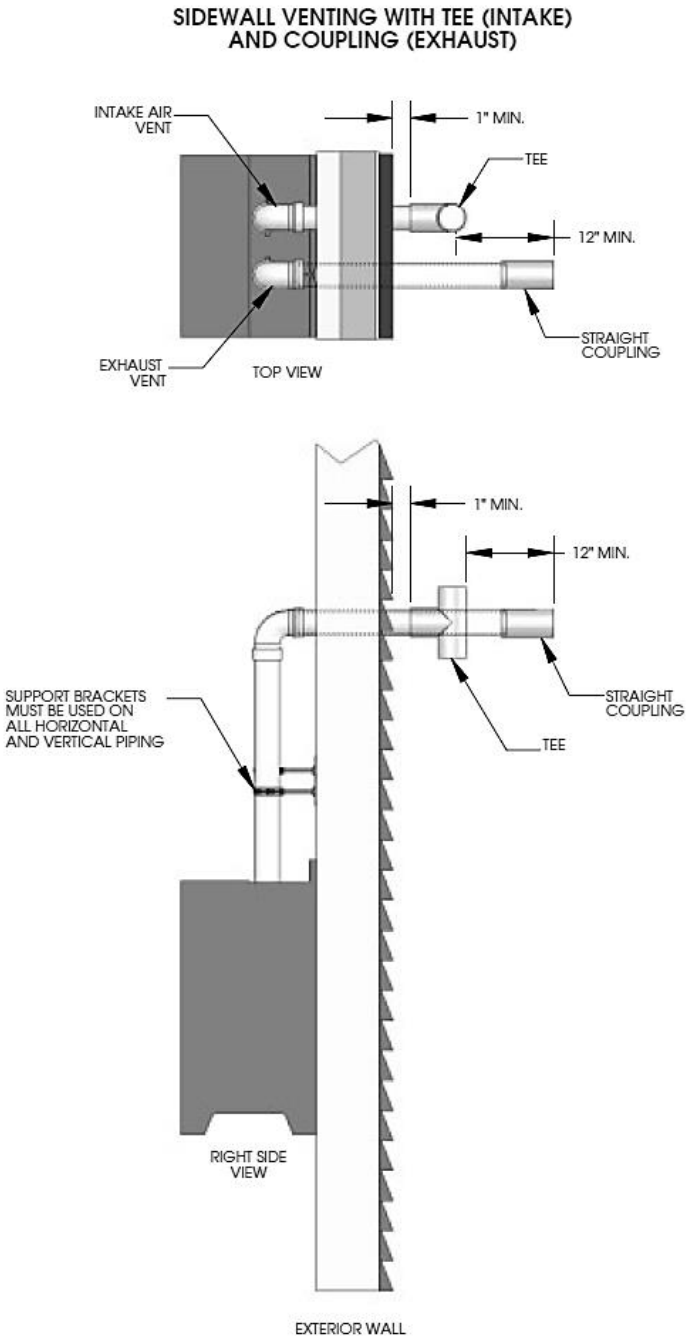

GENERAL NOTE: All vent pipes must be glued, properly supported and the exhaust must be pitched a minimum of a ¼" per foot back to the heater (to allow drainage of condensate).

NOTE: When placing support brackets on vent piping, the first bracket must be within 1 foot of the appliance and the balance at 4 foot invervals on the vent pipe. The boiler venting must be readily accessible for visual inspection for the first three feet from the boiler.

Figure 25 – Venting

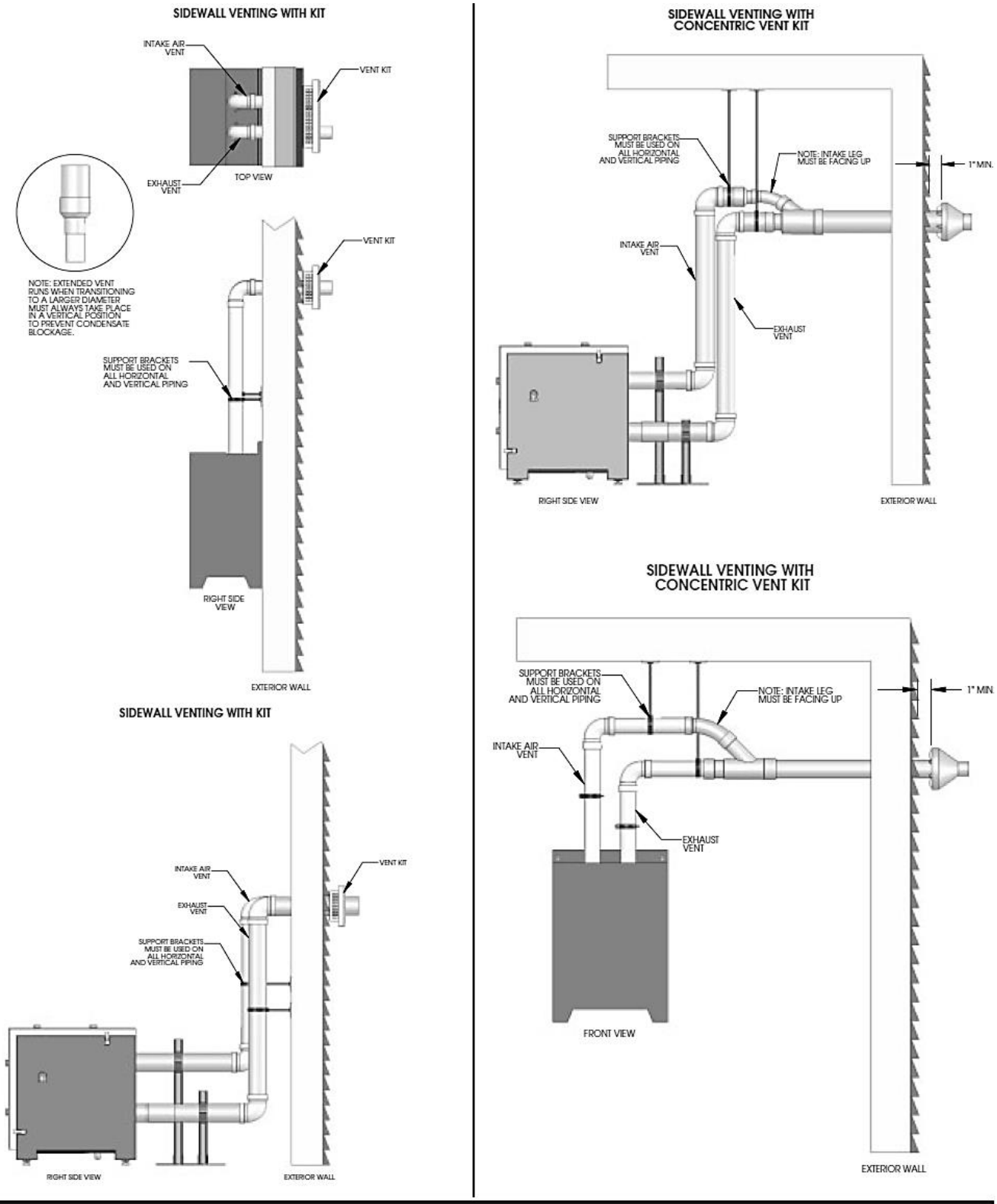

NOTE: When placing support brackets on vent piping, the first bracket must be within 1 foot of the appliance and the balance at 4 foot invervals on the vent pipe. The boiler venting must be readily accessible for visual inspection for the first three feet from the boiler.

GENERAL NOTE: All vent pipes must be glued, properly supported and the exhaust must be pitched a minimum of a ¼" per foot back to the heater (to allow drainage of condensate).

Figure 26 – Sidewall Venting

J. DIAGRAMS FOR VERTICAL VENTING

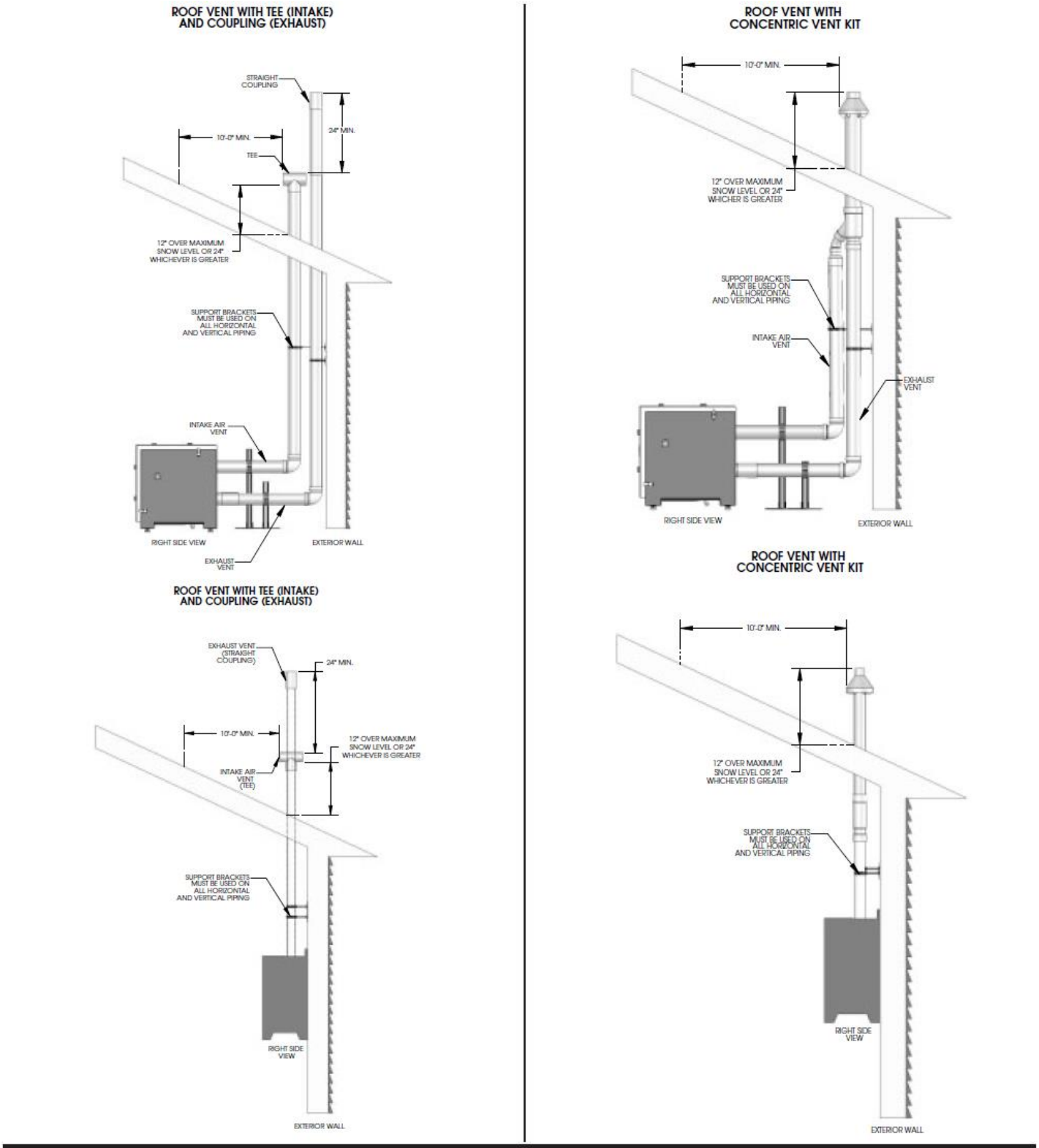

NOTE: When placing support brackets on vent piping, the first bracket must be within 1 foot of the appliance and the balance at 4 foot invervals on the vent pipe. The boiler venting must be readily accessible for visual inspection for the first three feet from the boiler.

GENERAL NOTE: All vent pipes must be glued, properly supported and the exhaust must be pitched a minimum of a ¼" per foot back to the heater (to allow drainage of condensate).

Figure 27 – Vertical Venting

PART 8 – GAS PIPING

⚠ WARNING

Failure to follow all precautions in this section could result in fire, explosion, severe injury or death!

A. GAS CONNECTION

Connect the gas supply to the system following state and local plumbing codes.

The gas supply shall have a maximum inlet pressure of less than 14" water column (350 mm), ½ pound pressure (3.5 kPa), and a minimum of 3.5" water column. The entire piping system, gas meter and regulator must be sized properly to prevent pressure drop greater than 0.5" WC as stated in the National Fuel Gas Code. This information is listed on the rating plate.

NOTE: Maximum inlet gas pressure must not exceed 14” w.c. (3.5 kPa).

***NOTE:** Installer must supply trap to meet local code requirements.

⚠ DANGER

It is very important that you are connected to the type of gas noted on the rating plate. “LP” for liquefied petroleum, propane gas, or “NAT” for natural or city gas. Prior to turning the gas on, all gas connections must be approved by the local gas supplier or utility, in addition to the governing authority.

The nipple provided is ½” with a factory installed ¾” bell reducer. DO NOT REMOVE this ¾” by ½” bell reducer! It is mandatory that this fitting is used for connection to a field fabricated drip leg per the National Fuel Gas Code. Ensure that the entire gas line to the connection is no smaller than ¾”.

⚠ WARNING

Do not attempt to support the weight of gas piping with the boiler or its accessories. The gas valve and blower will not support the weight of the piping. Failure to follow this warning could result in substantial property damage, severe personal injury, or death.

Once all inspections have been performed, the piping must be leak tested. If the leak test requirement is a higher test pressure than the maximum gas inlet pressure, you must isolate the boiler from the gas line to continue leak testing. To do this, turn off the factory and field-installed gas cocks. This will minimize the possibility of damaging the gas valve. Failure to do so may damage the gas valve. In the event the gas valve is exposed to a pressure greater than ½ PSI, 14" water column, the gas valve must be replaced. Never use an open flame (match, lighter, etc.) to check gas connections.

Refer to the table below to size the supply piping to minimize pressure drop between meter or regulator and unit.

Maximum capacity of pipe in cubic feet of gas per hour for gas pressures of .5 psi or less and a pressure drop of .3 inch water column:

Nominal Iron Pipe Size (Inches)	Internal Diameter (Inches)	Length of Pipe (Feet)														BTU’s Per Hour x 1,000
		10	20	30	40	50	60	70	80	90	100	125	150	175	200	
¾	.824	278	190	152	130	115	105	96	90	84	79	72	64	59	55	
1	1.049	520	350	285	245	215	195	180	170	160	150	130	120	110	100	
1 ¼	1.380	1,050	730	590	500	440	400	370	350	320	305	275	250	225	210	
1 ½	1.610	1,600	1,100	890	760	670	610	560	530	490	460	410	380	350	320	

Table 9

It is recommended that a soapy solution be used to detect leaks. Bubbles will appear on the pipe to indicate a leak is present. The gas piping must be sized for proper flow and length of pipe to avoid excessive pressure drop. Both the gas meter and the gas regulator must be properly sized for the total gas load. If you experience a pressure drop greater than 1" WC, the meter, regulator or gas line is undersized or in need of service. You can attach a manometer to the incoming gas drip leg by removing the cap. The gas pressure must remain between 3.5" WC and 14" WC during stand-by (static) mode and while in operating (dynamic) mode at full output.

If an in-line regulator is used, it must be a minimum of 10 feet from the boiler. It is very important that the gas line is properly purged by the gas supplier or utility. Failure to properly purge the lines or improper line sizing will result in ignition failure. This problem is especially noticeable in NEW LP installations and also in empty tank situations. This can also occur when a utility company shuts off service to an area to provide maintenance to their lines. The gas valve must not be replaced with a conventional gas valve under any circumstances. As an additional safety feature, the gas valve in this boiler has a flanged connection to the swirl plate and blower.

B. GAS PIPING

1. Run the gas supply line in accordance with all applicable codes.

2. Locate and install manual shutoff valves in accordance with state and local requirements.

3. In Canada, the Manual Shutoff must be identified by the installing contractor.

4. It is important to support gas piping as the boiler is not designed to structurally support a large amount of weight.

5. Purge all gas lines thoroughly to avoid start up issues with air in the lines.

6. Sealing compound (pipe dope) must be used and approved for gas connections. Apply sparingly, and only to the male threads. Care must be taken when applying compound to prevent blockage or obstruction of gas flow which may affect the operation of the boiler.

⚠ WARNING

Failure to apply pipe sealing compound as detailed above could result in substantial property damage, severe personal injury, or death.

CAUTION

CSA / UL listed flexible gas connections can be used when installing the boiler. Flexible gas connections have different capacities and must be sized correctly for the connected boiler firing rates. Consult with the flex line supplier to assure the line size is adequate for the job. Follow local codes for proper installation and service requirements.

⚠ WARNING

Never use an open flame (match or lighter) to check for gas leaks. Use a soapy solution to test connection. Failure to use a soapy solution test or check gas connection for leaks could result in substantial property damage, severe personal injury, or death.

CAUTION

Use a two-wrench method when tightening gas piping near the boiler and its piping connection: One wrench to prevent the boiler gas line connection from turning; the second to tighten the adjacent piping. Failure to support the boiler gas piping connection could damage the boiler beyond repair. Such damage IS NOT covered by warranty.

C. CHECK INLET GAS PRESSURE

The gas valve is equipped with an inlet gas pressure tap that can be used to measure the gas pressure to the boiler. To check gas pressure, perform the steps listed below:

1. **IMPORTANT!** Before you connect to the inlet pressure, shut off the gas and electrical power to boiler.

2. Loosen the pressure tap with a small screwdriver. Refer to Figure 28 for location.

3. Each boiler is equipped with a needle valve that will accept a 5/16 ID hose to connect to a digital manometer or liquid gauge designed to measure incoming pressure from 0-35” w.c. See Figure 28.

4. Turn on the gas and power up the boiler.

5. Put the boiler into manual test mode (details on test mode are in Part 12 Section D). In service mode, monitor pressure to assure it does not drop below 1 inch from its idle reading. If gas pressure is out of range or pressure drop is excessive, contact the gas utility, gas supplier, qualified installer, or service agency to determine correct action that is needed to provide proper gas pressure to the boiler. If Gas Pressure is within normal range proceed to Step 6.

6. Exit test mode, then turn power off and shut off gas supply at the manual gas valve before disconnecting the hose from the gas monitoring device. Tighten screw on the pressure tap and turn gas on. Check for leaks with soapy solution. Bubbles will appear on the pipe to indicate a leak is present.

⚠ WARNING

Ensure the pressure tap screw is properly tightened to prevent gas leaks. Failure to do so could cause substantial property damage, severe personal injury, or death.

The gas piping must be sized for the proper flow and length of pipe to avoid pressure drop. The gas meter and regulator must be properly sized for the total gas load. If you experience a pressure drop greater than 1" w.c. (.87 kPa), the meter, regulator or gas line

may be undersized or in need of service. You can attach a manometer to the incoming gas drip leg after removing the cap. The gas pressure must remain between 3.5" (.87 kPa) and 14" (3.5 kPa) during stand-by (static) mode and while in operating (dynamic) mode.

If an in-line high gas pressure regulator is used, it must be installed a minimum of 10 feet from the boiler. It is very important that the gas line is properly purged by the gas supplier or utility. Failure to properly purge the lines, or improper line sizing, will result in ignition failure. This problem is especially noticeable in NEW LP installations and empty tank situations. This situation can also occur when a utility company shuts off service to an area to provide maintenance to their lines. This gas valve must not be replaced with a conventional gas valve under any circumstances.

⚠ WARNING

DO NOT adjust or attempt to measure gas valve outlet pressure. The gas valve is factory-set for the correct outlet pressure and requires no field adjustment. Attempts by the installer to adjust or measure the gas valve outlet pressure could result in damage to the valve and cause substantial property damage, severe personal injury, or death.

D. GAS VALVE

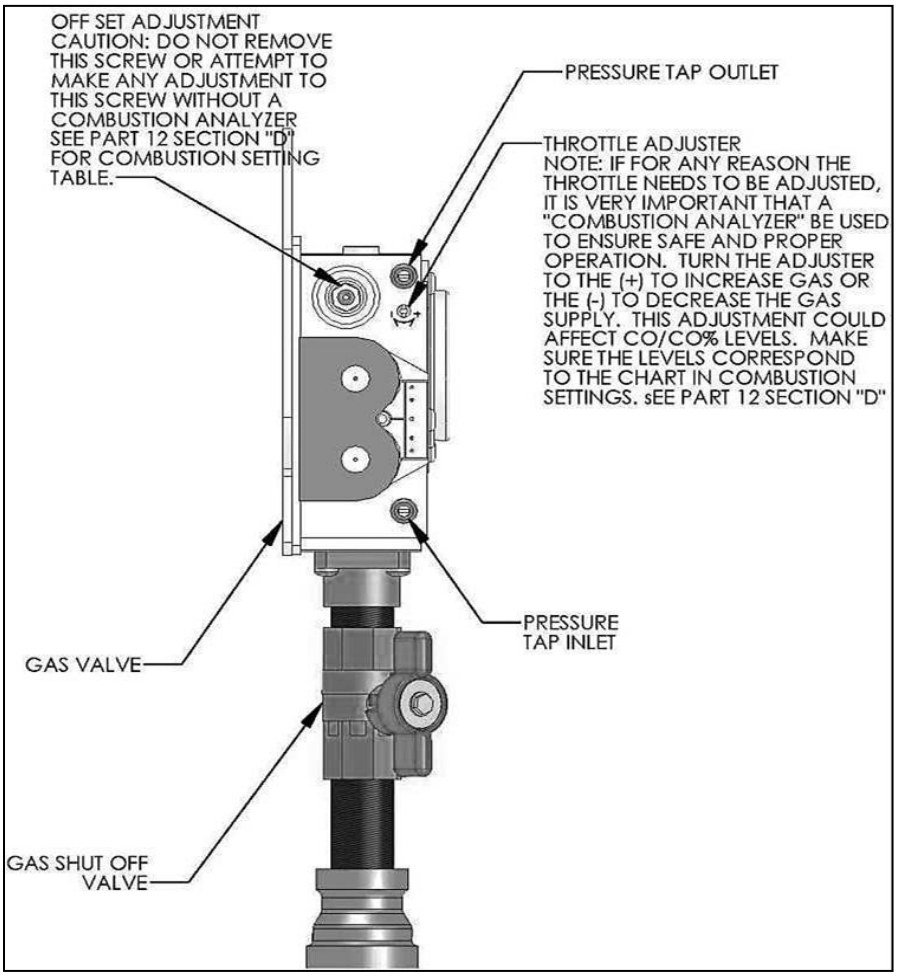

Figure 28 – LP-171-N

⚠ DANGER

Do not do a gas conversion on this boiler without an officially approved conversion kit and instructions supplied by HTP. Failure to use a conversion kit when converting the boiler to fire on Natural or LP gas will result in extremely dangerous burner operation, leading to fire, explosion, severe injury or death.

⚠ WARNING

Strain on the gas valve and fittings may result in vibration, premature component failure and gas leakage, and result in fire, explosion, property damage, severe personal injury, or death.

⚠ WARNING

Adjustments to the throttle screw or offset may only be made by a qualified gas technician using a calibrated combustion analyzer capable of measuring CO_2 and CO. Failure to follow this instruction could result in fire, explosion, property damage, severe personal injury, or death.

PART 9 – FIELD WIRING

⚠ WARNING

To avoid electrical shock, turn off all power to the boiler prior to opening an electrical box within the unit. Ensure the power remains off while any wiring connections are being made. Failure to follow these instructions could result in component or product failure, serious injury, or death. Such product failure IS NOT covered by warranty.

⚠ WARNING

ELECTRICAL SHOCK HAZARD – Turn off electrical power supply at service entrance panel before making any electrical connections. Failure to do so can cause severe personal injury or death.

CAUTION

Wiring must be N.E.C. Class 1. If original wiring supplied with the boiler must be replaced, use only UL Listed TEW 105º C wire or equivalent. Boiler must be electrically grounded as required by National Electrical Code ANSI/NFPA 70 – Latest Edition.

⚠ CAUTION

In order to ease future servicing and maintenance, it is advised to label all wires. Wiring errors can cause improper and dangerous operation. Failure to follow these instructions could result in property damage or personal injury.

A. INSTALLATION MUST COMPLY WITH:

National Electrical Code and any other national, state, provincial or local codes or regulations.

In Canada, CSA C22.1 Canadian Electrical Code Part 1, and any local codes.

B. FIELD WIRING

The boiler box has a 24 volt terminal strip on the boiler cabinet and a 120 volt terminal strip enclosed in the electrical box. Each terminal connection is clearly marked to assure correct installation.

C. LINE VOLTAGE WIRING

1. Connect 120 VAC power wiring to the line voltage terminal strip located inside the electric junction box, as shown in Figure 30.

2. Wire the Boiler Primary Circulator (P1) to the terminal strip. See wiring diagram in this section.

D. THERMOSTAT

1. Connect room thermostat or end switch.

2. Install thermostat on inside wall away from influences of drafts, hot or cold water pipes, lighting fixtures, television, sunrays or fireplaces.

3. Thermostat anticipator (if applicable):

   a. If connected directly to boiler, set for 0.1 amps.
   b. If connected to relays or other devices, set to match total electrical power requirements of connected devices. See specifications of the device and thermostat instructions for details.

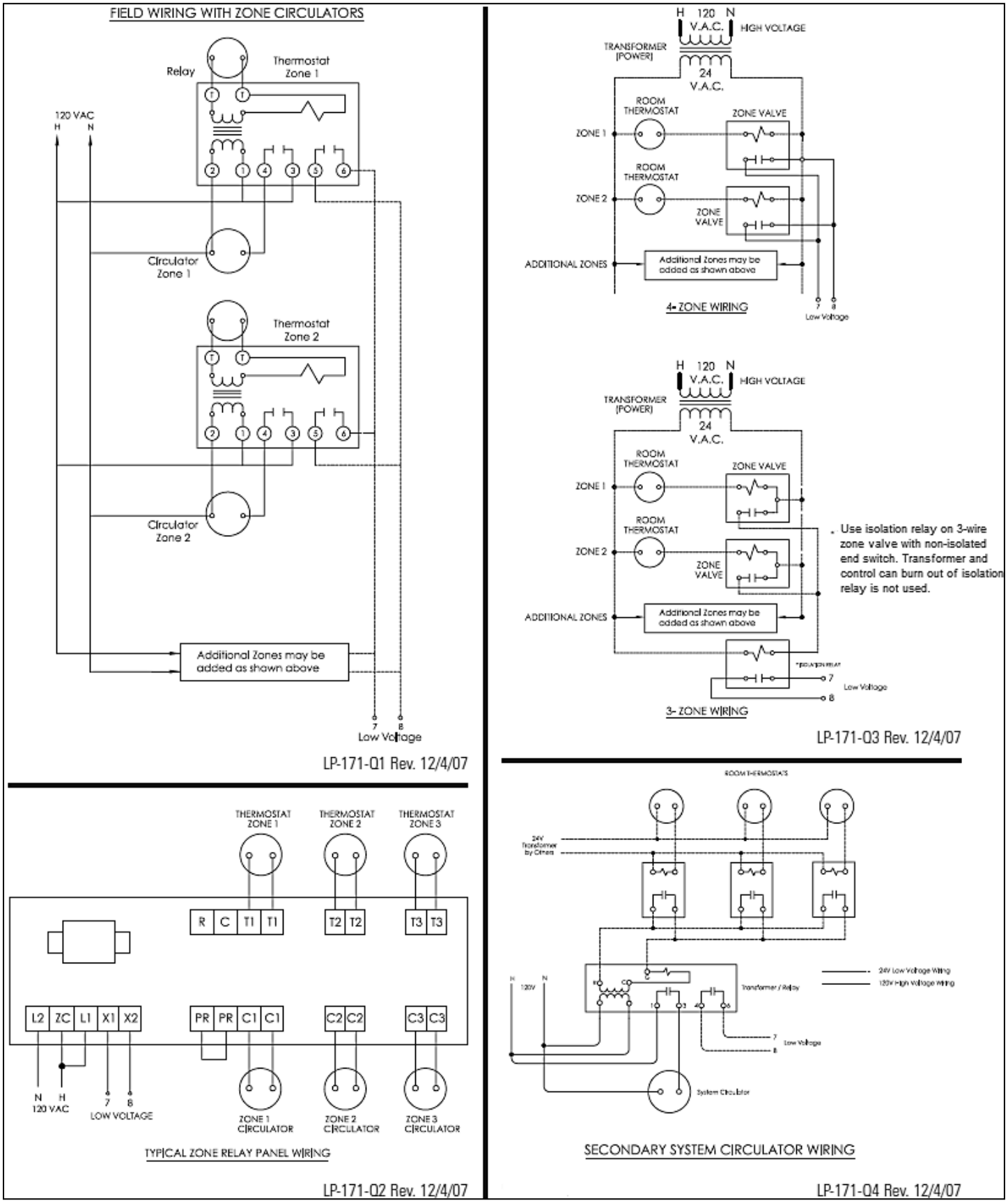
FIELD WIRING WITH ZONE CIRCULATORS
Relay
Thermostat Zone 1
120 VAC
H
N
Circulator Zone 1
Thermostat Zone 2
Circulator Zone 2
Additional Zones may be added as shown above
7 8
Low Voltage
LP-171-Q1 Rev. 12/4/07
H 120 N
V.A.C.
HIGH VOLTAGE
TRANSFORMER (POWER)
24 V.A.C.
ROOM THERMOSTAT
ZONE VALVE
ZONE 1
ZONE 2
ADDITIONAL ZONES
Additional Zones may be added as shown above
4- ZONE WIRING
Low Voltage
Use isolation relay on 3-wire zone valve with non-isolated end switch. Transformer and control can burn out of isolation relay is not used.
3- ZONE WIRING
LP-171-Q3 Rev. 12/4/07
THERMOSTAT ZONE 1
THERMOSTAT ZONE 2
THERMOSTAT ZONE 3
R C T1 T1
T2 T2
T3 T3
L2 ZC L1 X1 X2
PR PR C1 C1
C2 C2
C3 C3
N H
120 VAC
7 8
LOW VOLTAGE
ZONE 1 CIRCULATOR
ZONE 2 CIRCULATOR
ZONE 3 CIRCULATOR
TYPICAL ZONE RELAY PANEL WIRING
LP-171-Q2 Rev. 12/4/07
ROOM THERMOSTATS
24V Transformer by Others
Transformer / Relay
24V Low Voltage Wiring
120V High Voltage Wiring
Low Voltage
System Circulator
SECONDARY SYSTEM CIRCULATOR WIRING
LP-171-Q4 Rev. 12/4/07

Figure 29

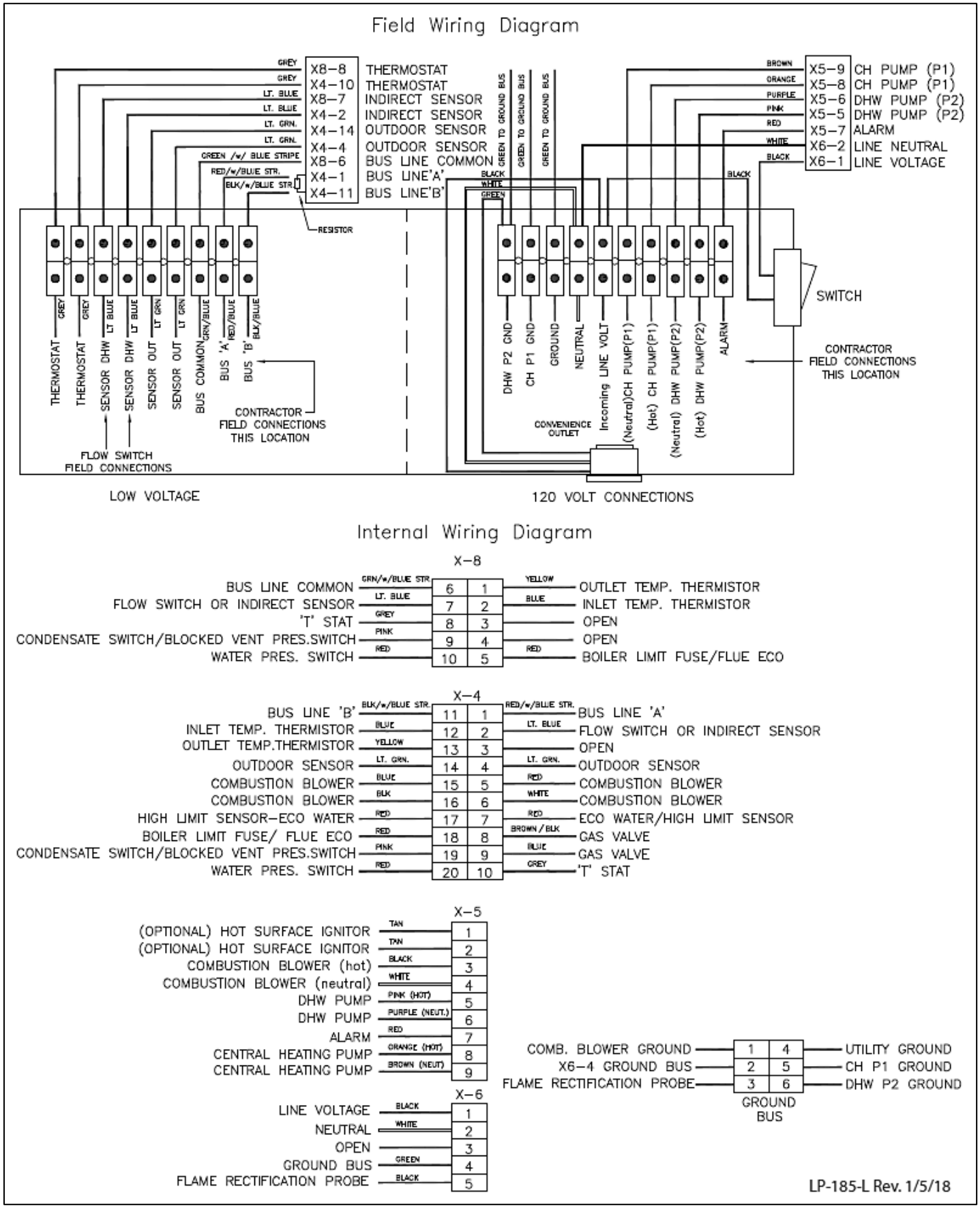

Figure 30– NOTE: A resistor is provided between Bus Lines A and B. DO NOT REMOVE THIS RESISTOR! DOING SO WILL EFFECT HEATER OPERATION AND VOID WARRANTY!

PART 10 – FIELD WIRING – VISION 1 OPTION

Outdoor Sensor Function
The user can program the desired supply temperature based on the heat transmitter (baseboard, radiant floor, air handler) that will be used in the installation. Once the outdoor sensor (light green wires) is connected to the control board, the water temperature of the boiler will adjust to run the boiler more efficiently and provide greater comfort to the living space.

Connection Specification – Wire 22 AWG maximum to 100 feet or 18 AWG up to 150 feet. Length of wire run cannot exceed 150 feet.

Outdoor Sensor
NOTE: If the system requires a fixed operating temperature, the outdoor sensor is not required and should not be installed.

Connected in the boiler junction box, the Outdoor Sensor allows the control to automatically change the temperature going to the central heating loop. Route wires from the boiler terminal strip to your outdoor sensor. Place the sensor preferably to the north or northwest or to the side which will be affected by changing weather conditions outside. **NOTE:** Do not locate the sensor in direct sunlight.

CAUTION

The wire to outdoor sensor must not be laid closer than 6' to line voltage wiring (120/240 V) and must never be in the same conduit.

NOTE: For correct mounting procedures, follow instructions provided with the sensor.

NOTE: If sensor wires are located in an area with sources of potential electromagnetic interference (EMI), the sensor wires should be shielded, or the wires routed in a grounded metal conduit. If using shielded cable, the shielding should be connected to the common ground of the boiler.

Indirect Sensor Function
The maximum run time on priority function for the SuperStor Ultra Indirect Fired Water Heater is from 1-60 minutes. The water temperature can only be adjusted when using a sensor (not a mechanical control). Temperature adjustments are from 95 to 185 degrees, plus a differential 1-18 degrees (Note: It is recommended that you do not exceed 5 minutes on the DHW pump post purge cycle to avoid cooling down your DHW tank).

Indirect Sensor
The Indirect Sensor connects to the boiler main control. Route wires from the terminal strip to the sensor or the mechanical control, Honeywell part # L4080b1395 (not included in Vision I Package), into the control well located in the front of the water heater. This will allow the installer to control the temperature of the indirect from the boiler and give the indirect priority over the central heating circuit. Once the indirect is satisfied, the boiler will then switch back to central heating if there is a call for heat. If not, the boiler will then shut down.

⚠ WARNING

Caution should be used to ensure neither of these terminals becomes connected to ground.

NOTE: If sensor wires are located in an area with sources of potential electromagnetic interference (EMI), the sensor wires should be shielded, or the wires routed in a grounded metal conduit. If using shielded cable, the shielding should be connected to the common ground of the boiler.

⚠ WARNING

Failure to use the correct sensor may result in tank temperature being either above or below set point, and could result in decreased performance, substantial property damage, or heightened risk of injuries due to scalds.

Indirect Circulator (P2) Program Function
The Indirect Circulator Program Function will automatically start when the water heater sensor reads a call for heat. The installer can also program the post purge function on the circulator. The post purge circulator function ranges from 1-30 minutes.

Indirect Circulator (P2)
The Indirect Circulator connects to the boiler terminal strip. Run wire to the SuperStor Ultra Indirect circulating pump. The purple wire is the neutral lead and the pink wire is the hot. This will supply 120 volts directly to the water boiler circulator.

Fault Code Alarm Output
If there is a lockout fault present in the boiler control, a 120 volt output is activated. This is useful when you have a remote display that will notify you of a fault condition, or if you have auxiliary equipment that needs to shut down in the event of a lockout.

Fault Code Alarm Function
Connect the fault annunciator or lights to the alarm output on the boiler terminal strip and the incoming neutral line in the junction box. NOTE: The annunciator or light must be rated for 120 volt AC. A relay may be employed to use devices with ratings other than 120 volt AC.

CAUTION
Do not tie neutrals or hot wire leads to any other wires. Go directly from the boiler controller to the circulator.

Connection Specification – Wire 18 AWG maximum. Length of wire run cannot exceed 100 feet.

PART 11 – START-UP PREPARATION

⚠ WARNING
Thoroughly clean and flush any system that has used glycol before installing the boiler. Provide the customer with a material safety data sheet (MSDS) on the fluid used.

A. CHECK/CONTROL WATER CHEMISTRY

CAUTION
Chemical imbalance of your water can cause severe damage to your boiler and associated equipment, and may also affect efficiency. You may have to have your water quality professionally analyzed to determine whether you need to install a water softener. It is important that the water chemistry on both the domestic hot water and central heating sides are checked before installing the boiler, as water quality will affect the reliability of the system. Outlined below are those water quality parameters which need to be met in order for the system to operate efficiently for many years. **Failure of a heat exchanger due to lime scale build-up on the heating surface, low pH or other imbalance IS NOT covered by the warranty.**

To assure extended service life, it is recommended to test water quality prior to installation. Listed below are some guidelines.

⚠ WARNING
Do not use petroleum-based cleaning or sealing compounds in boiler system. Damage to elastomer seals and gaskets in system could occur, resulting in substantial property damage.

Sodium less than 20 mGL

Water pH between 6.0 and 8.0
1. Maintain boiler water pH between 6.0 and 8.0. Check with litmus paper or have chemically analyzed by water treatment company.

2. If pH differs from above, consult local water treatment company for treatment needed.

Hardness less than 7 grains
Consult local water treatment companies for unusually hard water areas (above 7 grains hardness).

Chlorine concentration less than 100 ppm
1. Filling with chlorinated fresh water should be acceptable since drinking water chlorine levels are typically less than 5 ppm.

2. Do not use the boiler to directly heat swimming pool or spa water.

3. Do not fill boiler or operate with water containing chlorine in excess of 100 ppm.

Clean system to remove sediment
1. You must thoroughly flush the system (without boiler connected) to remove sediment. The high-efficiency heat exchanger can be damaged by buildup or corrosion due to sediment.

2. For zoned systems, flush each zone separately through a purge valve. (If purge valves and isolation valves are not already installed, install them to properly clean the system.)

3. Flush system until water runs clean and you are sure piping is free of sediment.

Test/replace freeze protection fluid
1. For systems using freeze protection fluids, follow fluid manufacturer's instructions to verify inhibitor level and that other fluid characteristics are satisfactory.

2. Freeze protection fluid must be replaced periodically due to degradation of inhibitors over time. Follow all fluid manufacturer instructions.

NOTE: Boiler failure due to improper water chemistry is not covered by warranty.

B. FREEZE PROTECTION (WHEN USED)

CAUTION

NEVER use automotive or standard glycol antifreeze, or ethylene glycol made for hydronic systems. System water, including additives, must be non-toxic, having a toxicity rating or Class of 1, as listed in Clinical Toxicology of Commercial Products. Use only freeze-prevention fluids certified by fluid manufacturer as suitable for use with stainless steel boilers, verified in fluid manufacturer literature. Thoroughly clean and flush any system that has used glycol before installing the new boiler. Provide boiler owner with a material safety data sheet (MSDS) on the fluid used.

1. Determine freeze protection fluid quantity using total system water content, following fluid manufacturer's instructions. Remember to include expansion tank water content.

2. **NOTE:** Local codes may require back flow preventer or actual disconnect from city water supply.

3. When using freeze protection fluid with automatic fill, install a water meter to monitor water makeup. Freeze protection fluid may leak before the water begins to leak, causing concentration to drop, reducing the freeze protection level.

C. FILL AND TEST WATER SYSTEM

⚠ WARNING

Ensure the boiler is full of water before firing the burner. Failure to do so will damage the boiler. Such damage IS NOT covered by warranty, and could result in property damage, severe personal injury, or death.

1. Fill system only after ensuring the water meets the requirements of this manual.

2. Close manual and automatic air vents and boiler drain valve.

3. Fill to correct system pressure. Correct pressure will vary with each application.
   a. Typical cold water fill pressure for a residential system is 12 psi.
   b. Pressure will rise when boiler is turned on and system water temperature increases. Operating pressure must never exceed 25 psig.

4. At initial fill and during boiler startup and testing, check system thoroughly for any leaks. Repair all leaks before proceeding further.

⚠ WARNING

Eliminate all system leaks. Continual fresh make-up water will reduce boiler life. Minerals can build up in the heat exchanger, reducing heat transfer, overheating heat exchanger, causing heat exchanger failure, and possibly resulting in property damage, severe personal injury, or death.

5. The system may have residual substances that could affect water chemistry. After the system has been filled and leak tested, verify water pH and chlorine concentrations are acceptable.

D. PURGE AIR FROM WATER SYSTEM

CAUTION

It is important that you purge the system of air to avoid damage to the boiler. Make sure that this procedure is followed before firing the boiler.

To purge air from system:
   a. Connect a hose to the purge valve and route hose to an area where water can drain and be seen.
   b. Close the boiler or system isolation valve between the purge valve and fill connection to the system.
   c. Close zone isolation valves.
   d. Open quick-fill valve on cold water makeup line.
   e. Open purge valve.
   f. One zone at a time, open the isolation valves. Allow water to run through the zone, pushing out the air. Run until no noticeable air flow is present. Close the zone isolation valves and proceed with the next zone. Follow this procedure until all zones are purged.

g. Close the quick-fill water valve and purge valve and remove the hose. Open all isolation valves. Watch that system pressure rises to correct cold-fill pressure.
h. After the system has operated for a while, eliminate any residual air by using the manual air vents located throughout the system.
i. If purge valves are not installed in system, open manual air vents in system one at a time, beginning with lowest floor. Close vent when water squirts out. Repeat with remaining vents.
j. Refill to correct pressure.

E. CHECK FOR GAS LEAKS

⚠ WARNING

Before starting the boiler, and during initial operation, smell near the floor and around the boiler for gas odorant or any unusual odor. Remove boiler front door and smell interior of boiler enclosure. Do not proceed with startup if there is any indication of a gas leak. Repair any leak at once.

⚠ WARNING

Propane boiler only – Your propane supplier mixes an odorant with the propane to make its presence detectable. In some instances, the odorant can face, and the gas may no longer have an odor. Before startup (and periodically thereafter), have the propane supplier verify the correct odorant level in the gas.

F. CHECK THERMOSTAT CIRCUIT(S)

1. Disconnect the two external wires connected to the boiler thermostat terminals (low voltage terminal strip terminals 5 and 6).

2. Connect a voltmeter across these two incoming wires. Close each thermostat, zone valve and relay in the external circuit one at a time and check the voltmeter reading across the incoming wires.

3. There should NEVER be a voltage reading.

4. If a voltage does occur under any condition, check and correct the external wiring. (This is a common problem when using 3-wire zone valves.)

5. Once the external thermostat circuit wiring is checked and corrected if necessary, reconnect the external thermostat circuit wires to boiler low voltage terminal strip. Allow the boiler to cycle.

G. CHECK CONDENSATE REMOVAL

1. This a high efficiency condensing boiler, therefore, the unit has a condensation drain. Condensate is nothing more than water vapor, derived from combustion products, similar to an automobile when it is initially started. The condensation is slightly acidic (typically with pH of 3 to 5) and must be piped with the correct materials. Never pipe the condensate using steel, copper, brass or other materials that will be subject to corrosion. Plastic PVC or CPVC pipe are the only approved materials. A condensate filter, if required by local authorities, can be made up of lime crystals marble or phosphate chips that will neutralize the condensate. This may be done by the installer or you may purchase a condensate neutralizer from HTP (p/n 7450P-218).

2. The boiler is equipped with a ¾" pipe connection that runs the condensation line to a local drain. It is very important that the condensate line is sloped away from the boiler and down to a suitable inside drain. If the condensate outlet is lower than the drain, you must use a condensate removal pump, available at HTP (#554200). This pump is equipped with two leads that can be connected to an alarm or another type of warning device to alert residents of a condensate overflow, which, if not corrected, could cause property damage.

3. The boiler is equipped with an internal vent on the top plug connection to assure adequate flow of condensate. This vent should never be blocked.

4. If a long horizontal run is used, it may be necessary to create a second vent to prevent a vacuum lock in the condensate line. Do not expose the condensate to freezing temperatures.

5. Do not expose the condensate to freezing temperatures.

6. It is very important you support the condensation line to assure proper drainage.

H. FINAL CHECKS BEFORE STARTING BOILER

1. Read Startup Procedures within this manual for proper steps to start boiler. (See Startup Report to record steps for future reference.)

2. Verify the boiler and system are full of water and all system components are correctly set for operation.

3. Fill condensate trap with water.

4. Verify electrical connections are correct and securely attached.

5. Inspect exhaust vent and intake pipe for signs of deterioration from corrosion, physical damage or sagging.

PART 12 – START-UP PROCEDURE

⚠ WARNING

FOR YOUR OWN SAFETY READ BEFORE OPERATING

1. This boiler does not have pilot. It is equipped with an ignition device which automatically lights the burner. Do not try to light the burner by hand.

2. BEFORE OPERATING: smell all around the boiler area for gas. Be sure to smell next to the floor because some gas is heavier than air and will settle on the floor.

WHAT TO DO IF YOU SMELL GAS

- Do not try to light any boiler.
- Do not touch any electric switch; do not use any phone in your building.
- Immediately call your gas supplier from a neighbor's phone. Follow the gas suppliers' instructions.
- If you cannot reach your gas supplier, call the fire department.
- Turn off gas shutoff valve (located outside of the boiler) so that the handle is crosswise to the gas pipe. If the handle will not turn by hand, don't try to force or repair it, call a qualified service technician. Force or attempted repair may result in a fire or explosion.

4. Do not use this boiler if any part has been under water. Immediately call a qualified service technician to inspect the boiler and to replace any part of the control system and any gas control that has been damaged.

5. The boiler shall be installed so the gas ignition system components are protected from water (dripping, spraying, rain, etc.) during boiler operation and service (circulator replacement, condensate trap, control replacement, etc.)

Failure to follow these instructions could result in property damage, serious personal injury, or death.

A. OPERATING INSTRUCTIONS

Remove boiler cover. If you smell gas, STOP. Follow listed safety instructions. If you do not smell gas, follow the next steps.

1. Turn on all electric power to boiler.

2. If desired, adjust the temperature set point of the boiler. The factory default setting is 180ºF. If changes are necessary follow “Adjusting the Set point” in this section.

3. Set the thermostat to the desired setting.

4. If the boiler fails to start, refer to the “Troubleshooting” section in the back of this manual.

⚠ DANGER

Water temperature over 125 degrees F. can cause severe burns instantly, or death from scalds. Children, disabled, and elderly are at highest risk of being scalded. See instruction manual before setting temperature at water heater. Feel water before bathing or showering! Temperature limiting valves are available.

B. ADJUSTING THE SET POINT

Before changing the temperature from the factory setting of 180 degrees, you must make sure that none of the thermostats are calling for heat. The controller will not memorize a program setting while in a heating cycle.

To adjust the boiler temperature simply press in the {S3} key for three seconds until you see a flashing (C) then an alternate value of (180). This number is the factory set point of the unit, which is 180 degrees. To change the temperature, simply push either {S1} to decrease or {S2} to increase the boiler temperature. The temperature of the boiler can be set as low as 50 Degrees or as high 180 Degrees. These ranges are your minimum and maximum boiler temperature ranges.

In addition to changing the temperature, you may also change three more settings in this model: 1. Boiler differential, 2. Indirect setting (**with Vision System option**), and 3. Celsius to Fahrenheit measurement. Press {S3} to get to next value. The boiler differential setting will appear in the display ch and alternating value of 30. This allows the installer to adjust the activation of the burner based on the differential temperature setting of the boiler. The burner will not start until the outlet water temperature reaches a temperature equal to the setting for the boiler, minus the differential EX: The boiler is set to heat at 180°F degrees and the differential is set at 30°F. The

burner will not start until the outlet temperature of the system reaches 149°F degrees (180° – 30°F = 150°F). To adjust, press either {S1} (Decrease Value) or {S2} (Increase Value) Ranges 5°F to 30°F.

Press {S3} again and you will see the Indirect Setting de and an alternative value of 119 (**with Vision Systems option**). To adjust, press either {S1} (Decrease Value) or {S2} (Increase Value).

The final adjustment in this mode is the Fahrenheit to Celsius measurement. Press {S3} again and you will see t and alternating value of F. To change value, press {S1} or {S2} to choose the correct measurement.

C. STATUS MENU

Installers are also able to check the current status of boiler parameters by pressing {S4} for 3 seconds. Once activated, the display will show |d1| alternating value of the actual outlet temperature. Actual values are displayed for each function. To view the next value, press {S4}. Listed below are the values which can be displayed. These values cannot be changed. To exit this menu, press {S3} to resume normal operation.

Function Value

d1 — Actual Temperature from outlet sensor
d2 — Actual Temperature from inlet sensor
d3 — If using a standard mechanical control, the control will display |1| for closed |0| for open. If the sensor is connected to the SuperStor Indirect Fired Water Heater it will measure the actual temperature (Vision option).
d4 — Not used
d5 — Actual Temperature from the outdoor sensor (Vision option).
d6 — Actual Fan speed multiplied by 10 (Example: If fan speed displayed is |410| RPM x 10 = 4100 actual fan speed)
d7 — Actual Ionization current read from Flame Rectification probe
d8 — Actual Status of the Central Heating Circulator Off = |0|, On = |1|. (Vision option.)
d9 — Actual Status of the Indirect Fired Circulator Off = |0|, On = |1|. (Vision option.)
d10 — Actual Status bus communication |co| = connected, |no| = not connected
d11 — Central Heating Set Point
d12 — Power On Hours in units
d13 — Total Central Heat Hours
d14 — Total Indirect/dhw Hours
d15 — Passed Ignition Attempts

D. TEST MODE

This function is intended to simplify the gas valve adjustment if needed. Listed below are the recommended limits on each boiler and the combustion settings. Automatic modulation does not take place when the controller is in Test mode, only temperature limitation based on the boiler central heating set point. The user will be allowed to increase or decrease the fan speed by pressing in either {S1} or {S2}.

To activate Test mode, press {S2} and {S3} together for 1 second. Once activated, you will see {Ser} in the display and the fan speed (shown in a multiple of 10). The measurement of the combustion levels should always be taken at the highest and lowest fan speed. After 10 minutes, the Test mode stops automatically. To exit Test mode, press {S1} and {S2} together for 1 second.

COMBUSTION SETTINGS HIGH FIRING RATES and LOW FIRING RATES ON ALL MODELS				
	NATURAL GAS		PROPANE LP	
	Low	High	Low	High
Carbon Monoxide (CO%)	0 – 20 ppm	70 – 135 ppm	0 – 20 ppm	80 – 150 ppm
Carbon Dioxide (CO_2%)	8 ½% - 9 ½%	8 ½% - 9 ½%	9 ½% - 10 ½%	9 ½% - 10 ½%

Table 10

FAN SPEEDS			
BOILER	**HIGH**	**LOW**	**IGNITION**
T50M	3000	1250	3000
T80M	4250	1200	3000
80M	3700	1600	3220
140M	3550	1400	2765
199M	4800	1500	2765
399M	7700	1900	3000

Table 11

PART 13 – START-UP PROCEDURES WITH VISION 1 OPTION

The Vision I option allows the user to have one temperature for central heating and another temperature for the SuperStor Ultra Indirect Fired Water Heater. This enables the user to increase the temperature supplied to the indirect water heater by prioritizing flow at a higher temperature than may be needed for the central heating circuits (this will require two separate circulators). Once the indirect water heater is satisfied, the Vision I system will switch back to the central heating circuit to continue to heat the living space at a temperature based on outside temperature. This gives you a higher comfort level and further increases boiler efficiency.

A. PROGRAMMING THE VISION I OPTION

The Vision I option allows the installer to set the system limits and heat curve for the boiler. These system limits should not be changed by the user. For future reference, it is important to document your settings within this manual after you program the system parameters.

B. VISION 1 PROGRAM ACCESS

Press and hold {S3} and {S4} simultaneously for three seconds to begin. You will notice that the display will change to |000|. Then, press down {S1} until you see |925| on the display. This is the pass code. Press and hold {S3} for 1 second to confirm the pass code. If the pass code is entered incorrectly, the controller program function will be cancelled and the control returns to normal operation. If the code is entered correctly, the control will switch off the gas valve and purge fan while showing a solid |---| in the display. The display will then show a |1| alternating to |de|. This first function verifies that the control will address the requirements of the indirect water heater.

C. VISION 1 PROGRAM NAVIGATION

Next you will have to press {S3} to move through each function. To increase or decrease a value, you will need to press either {S1} or {S2} to change the default values. If there is no key action for 1 minute, the display returns to normal operation. Changes are effective immediately but not directly stored until the {S4} key is pressed down for 3 seconds then the new values are stored. Listed below are the varieties of functions the installer can program into the Vision I System.

NOTE: The boiler cannot be programmed when there is a call for heat. See Table 14 to set outdoor reset curve.

START-UP PROCEDURES WITH VISION 1 OPTION		
DEFAULT FUNCTION	**FUNCTION VALUE**	**DESCRIPTION**
1	de	Not Applicable
2	149°F	Not Applicable
3	160°F	Maximum domestic delivery water temperature set point the installer will program for indirect water heater. (NOTE: Does not apply if used with mechanical control). **Range: 95°F to 160°F**
4	36°F	Not Applicable
5	7°F	Allows the installer to change the differential in the indirect water heater. (Does not apply if used with mechanical control.) **Range: 1°F to 18°F**
6	0 Min.	Allows the installer to change the indirect circulator post purge time once the sensor is satisfied. (NOTE: It is recommended that circulator post purge time be set no greater than 5 minutes. **Range: 0 to 60 minutes**
7	68°F	Outdoor temperature that you wish the central heating should be disabled – (warm weather shutoff). **Range: 41°F to 122°F**
*8	5°F	Changes the minimum outside design temperature. Range: -49°F to 32°F (See Table 14 to set outdoor reset curve.)
*9	180°F	Changes the design supply water temperature based on the minimum outside design temperature. **Range: 77°F to 180°F**
*10	68°F	Changes the maximum outside design temperature for central heating. **Range: 95°F to 32°F**
*11	95°F	Changes the design supply water temperature from the boiler based on the maximum outside design temperature. **Range: 32°F to 180°F**
12	68°F	Sets the lowest temperature on boiler for central heating. **Range: 32°F to 180°F**
13	0 Min.	Changes the central heating circulator post purge time once the thermostat is satisfied. **Range: 0 to 10 minutes**
14	30 Min.	Sets the maximum run time for the indirect water heater and the minimum run time for central heating. **Range: 0 to 60 minutes**
15	0	Bus address (0=zone master 1-8=cascade slave). (Not currently used.)
16	0	Interface Board Activation 0 = not active, 1 = active WARNING: Never change the default setting without the boiler interface board installed.

DEFAULT FUNCTION	FUNCTION VALUE	DESCRIPTION
17	0	Interface Board Function 0 = Building Management, 1 = Enables Tekmar Modulating Control (Consult with Tekmar to assure the Tekmar Control is compatible.)
18	1	Step Modulation – Regulates the burner output in 6 steps in one-minute intervals. This reduces short cycling. 1 = on, 0 = off
19	180º	Indirect boiler set point (flow) Temperature default = 119º to 180º
20	1	Not applicable
NOTE: The maximum water temperature leaving the boiler is limited to 185ºF.		

Table 12 - *Central Heating Curve Function

Central heating demand is detected when the room thermostat closes. When an outside sensor is also connected, the supply temperature will depend on the factory default central heating curve.

To set your heat curve, you will have to set the following parameters:

1. Minimum outside design temperature: **Function 8**.

2. Design supply water temperature at the minimum design outside temperature: **Function 9**.

3. Maximum outside design temperature: **Function 10**.

4. Design supply water temperature at the maximum outside temperature: **Function 11**.

NOTE: The homeowner can adjust the heat curve down by adjusting the central heating temperature to a lower setting.

CONTROL PROGRAM REFERENCE CHART		
FUNCTION	DEFAULT SETTING	PROGRAMMED SETTING
1	de	No change allowed
2	149ºF	No change allowed
3	160ºF	
4	36ºF	No change allowed
5	7ºF	
6	0 Min.	
7	68ºF	
8	5ºF	
9	180ºF	
10	68ºF	
11	95ºF	
12	68ºF	
13	0 Min.	
14	30 Min.	
15	0	
16	0	
17	0	
18	1	
19	180ºF	

Table 13 – Reference Chart

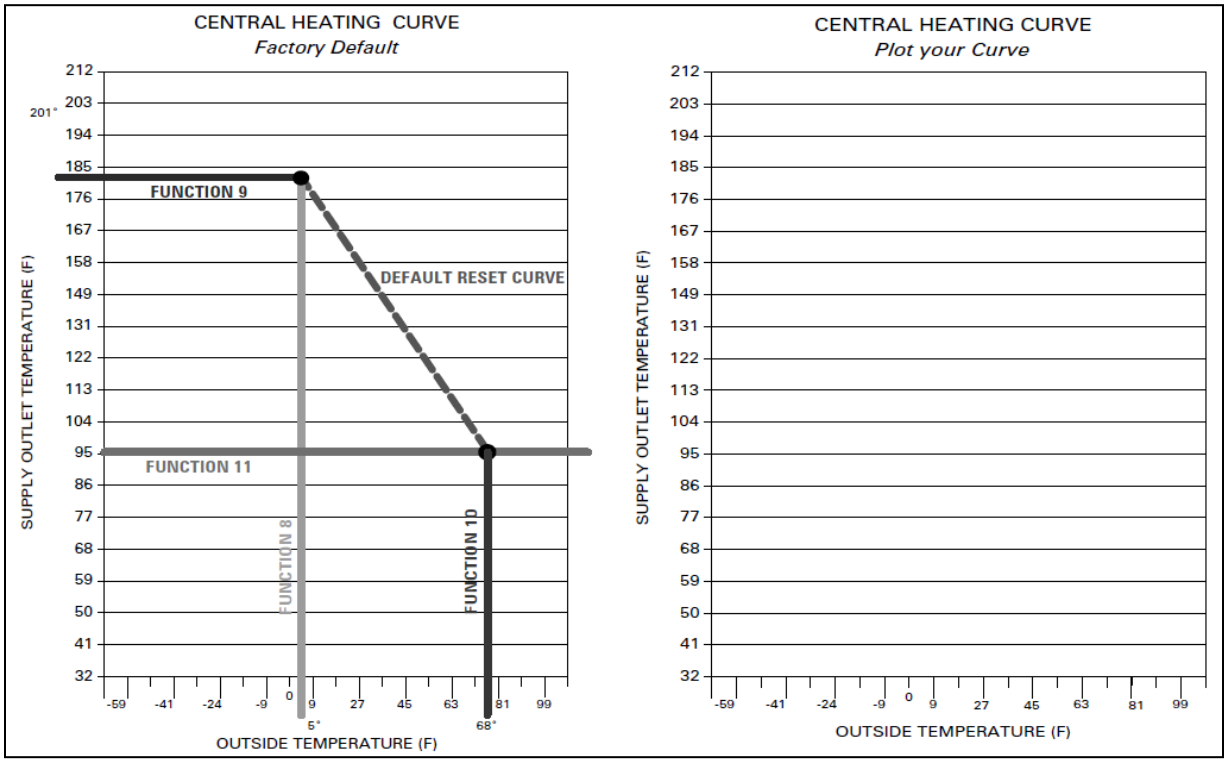

Table 14 – Central Heating Curve – Factory Default

PART 14 – TROUBLESHOOTING

A. ERROR CODE

An error code may occur in the installation of the boiler. This condition may lead to a lock out condition of the controller, which will need to be manually reset through the {S4}. These temporary codes will help the installer correct the problem before going into a lock out condition, which will require a manual reset.

B. BOILER ERROR

1. When an error condition occurs the controller will display an error code on the display module.

2. These error codes and several suggested corrective actions are included in Table 15.

3. In the case of E00, E13, and E14 this error, if uncorrected, will go into a fault condition as described is Paragraph C (Boiler Fault).

C. BOILER FAULT

1. When a fault condition occurs the controller will illuminate the red “fault” indication light and display a fault code in the format (Example: |F00|) on the display module.

2. Note the fault code and refer to Table 16 for an explanation of the fault code along with several suggestions for corrective actions.

3. Press the reset key to clear the fault and resume operation. Be sure to observe the operation of the unit to prevent a recurrence of the fault.

⚠ WARNING

When servicing or replacing any components of this boiler be certain that:

- The gas is off.
- All electrical power is disconnected.

⚠ DANGER

When servicing or replacing parts that are in direct contact with boiler water, be certain that:

- There is no pressure in the boiler. (Pull the release on the relief valve. Do not rely on the pressure gauge reading.)
- The boiler water is not hot.
- The electrical power is off.

⚠ WARNING

DO NOT USE THIS BOILER IF ANY PART HAS BEEN SUBMERGED IN WATER. Immediately call a qualified service technician. The boiler MUST BE replaced if it has been submerged. Attempting to operate an boiler that has been submerged could create numerous harmful conditions, such as a potential gas leakage causing a fire and/or explosion, or the release of mold, bacteria, or other harmful particulates into the air. Operating a previously submerged boiler could result in property damage, severe personal injury, or death.

NOTE: Boiler damage due to flood or submersion is considered an Act of God, and IS NOT covered under product warranty.

⚠ CAUTION

This boiler has wire function labels on all internal wiring. Observe the position of each wire before removing it. Wiring errors may cause improper and dangerous operation. Verify proper operation after servicing.

⚠ CAUTION

If overheating occurs or the gas supply fails to shut off, do not turn off electrical power to the circulating pump. This may aggravate the problem and increase the likelihood of boiler damage. Instead, shut off the gas supply to the boiler at the gas service valve.

925 CONTROL BOARD ERROR CODES			
CODE	**DESCRIPTION**	**DURATION**	**CORRECTIVE ACTION**
E00	High Limit Exceeded	50 Sec.	1. Check circulation pump operation. 2. Assure there is adequate flow through the boiler by accessing the status menu and assuring there is less than a 50ºF rise from the return thermistor to the supply thermistor. 3. Replace switch if faulty.
E13	Combustion Fan Speed Low. The boiler combustion air fan speed less than 70% of expected.	60 Sec.	1. Check the combustion air fan wiring. 2. Replace the combustion air fan. 3. Replace the control board.
E14	Combustion Fan Speed High. The boiler combustion air fan speed is more than 130% of expected.	60 Sec.	1. Check the combustion air fan wiring. 2. Replace the combustion air fan. 3. Replace the control board.
PRO	Water Pressure Switch is Open	Until Corrected	1. Assure that the system pressure is above 10 psig. 2. Check for leaks in the system piping.
FLU	Blocked Vent Pressure Switch open	Until Corrected	1. Check the flue vent to be sure it is not blocked or damaged. 2. Check the blocked vent pressure switch operation by applying a jumper. (If the switch is not functioning properly, replace it. **⚠ DANGER** Do not "Jump Out" any of the devices in this circuit. These devices ensure product safety and must be in place and connected at all times of normal operation.

Table 15

925 Control Board FAULT		
Code	**Description**	**Remedy**
F00	High temperature switch limit exceeded 194ºF	1. Check circulation pump operation. 2. Assure that there is adequate flow through the boiler by accessing the status menu and assuring that there is less than a 50ºF rise from the return thermister to the supply thermister. 3. Check thermister reading on supply thermister. Replace switch if faulty. 4. If this is a new installation, disconnect the two light grey wires from the zone control, and twist the wires together. Press S4. If the fault clears, the problem is outside the boiler. 5. If this is an existing installation with glycol, check the condition of the water pressure switch. It may be necessary to jump out the water pressure switch (temporarily only, as a troubleshooting aid). The 24 VAC signal may have grounded through the glycol if the water pressure switch is leaking.
F01	Vent temperature limit exceeded	1. Push the red reset button on the vent temperature limit switch. 2. Check the flue temperature during operation using a combustion analyzer. 3. Replace the vent limit switch if faulty. 4. Verify the combustion drain is clear and draining properly. 5. Visually inspect the target wall and ensure it is intact. If not intact, replace the target wall.

Code	Description	Remedy
F02	Interrupted or shorted supply (outlet) thermister.	1. Check the electrical connection to the thermister on the outlet manifold. Verify 5 VDC by checking in Molex connector. Verify thermistor values by referencing the chart in this manual. 2. If connection is okay, replace thermister.
F03	Interrupted or shorted return (inlet) thermister.	1. Check the electrical connection to the thermister on the outlet manifold. Verify 5 VDC by checking in Molex connector. Verify thermistor values by referencing the chart in this manual. 2. If connection is okay, replace thermister.
F05	Supply (outlet) temperature exceeds 230ºF.	1. Check circulation pump operation. 2. Assure that there is adequate flow through the boiler by accessing the status menu and assuring that there is less than a 50ºF rise from the return thermister to the supply thermister.
F06	Return (inlet) temperature exceeds 230ºF.	1. Check circulation pump operation. 2. Assure that there is adequate flow through the boiler by accessing the status menu and assuring that there is less than a 50ºF rise from the return thermister to the supply thermister. 3. Check direction of flow on boiler circulator.
F09	No flame detected – The boiler will make three attempts at ignition before the control goes into this lockout condition. *See spark electrode detail.	1. Watch the igniter through the observation window provided. 2. If there is no spark, check the spark electrode for the proper ¼" gap by holding two quarters together and sliding them through the gap. 3. Remove any corrosion from the spark electrode and flame rectifier probe. 4. If there is a spark but no flame, check the gas supply to the boiler. 5. If there is a flame, check the flame sensor. 6. Check any flue blockage or condensate blocks.
F10	Loss of flame signal – The boiler will relight 4 times before the control goes into this lockout condition. Will reset in 1 hour.	1. Monitor the gas pressure to the unit while in operation. 2. Assure that the flame is stable when lit. 3. Check to see if the green light on the display module is out while the boiler is running. 4. If the green light doesn't come on or goes off during operation check the flame signal on the status menu. 5. If the signal reads less than 1 microampere, clean the flame rectifier probe. 6. If the flame rectifier probe continues to read low, replace it. 7. Check the stability of the flame rectification signal. If the signal is unstable, you may need to replace the burner gasket.
F11	False flame signal – The boiler will lock out if it senses a flame signal when there should be none present.	1. Turn the gas off to the unit at the service valve. 2. If the flame signal is still present replace the igniter. 3. If the flame signal is not present after turning off the gas supply, check the gas valve electrical connection. 4. If there is no power to the gas valve, remove the valve and check for obstruction in the valve seat or replace the gas valve. 5. Turn the gas on at the service valve after corrective action is taken. 6. Check for condensate back up. Condensate back up can damage the refractory wall. If the wall falls against the rectifier probe, it may conduct the signal to ground, giving a false signal.
F13	Combustion fan speed low – The boiler will lock out if it senses that the fan speed is less than 70% of expected rate for more than 60 seconds.	1. Check the combustion air fan wiring. 2. Check the quality of the 24 VAC signal by measuring from any connected safety to ground. A low voltage situation may cause a "false" error code. 3. Replace the combustion air fan. 4. Replace the control board.
F14	Combustion fan speed high – The boiler will lock out if it senses that the fan speed is less than 130% of expected rate for more than 60 seconds.	1. Check the combustion air fan wiring. 2. Replace the combustion air fan. 3. Replace the control board.
F18	Gas Valve Error	1. Make sure the connector is correctly connected to the gas valve. 2. Check the electrical wiring from the valve to the control board. 3. Voltage readings will be from 18-22 VDC on the outlet of the gas valve plug from any pin to ground. The connector must remain in contact with the pins. ON THE 399M only, check the 24 VAC relay block. 4. Replace the low voltage wiring harness assembly. 5. Replace control board.
F19	Supply voltage frequency out of range. (92-132 VAC 60 Hz)	
F30	Watchdog	Call factory for further assistance.
F31	Parameter Memory	Call factory for further assistance.
F32	Parameter Memory Write Error	Call factory for further assistance.
F33	Programming Error	Call factory for further assistance.
PP	Parameters Programmed	Press S4 to reset.
Nc	Internal processor error, due to incoming voltage problems. (92-132 VAC 60 Hz) May also occur if neutral wire is broken or damaged.	
F	Internal Error	

Table 16

Resistance Tables

OUTDOOR SENSOR (7250P-319)	
OUTSIDE TEMP. (ºF)	RESISTANCE (ohms)
-22	171800
-13	129800
-4	98930
5	76020
14	58880
23	45950
32	36130
41	28600
50	22800
59	18300
68	14770
77	12000
86	9804
95	8054
104	6652
113	5522

Table 17

BOILER SENSOR (7250P-059)	INDIRECT SENSOR (7250P-325)
BOILER AND INDIRECT TEMPERATURE (ºF)	RESISTANCE (ohms)
32	32550
41	25340
50	19870
59	15700
68	12490
77	10000
86	8059
95	6535
104	5330
113	4372
122	3605
131	2989
140	2490
149	2084
158	1753
167	1481
176	1256
185	1070
194	915
203	786
212	667

Table 18

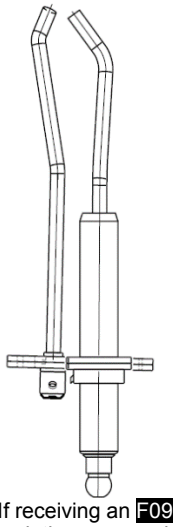

NOTE: If receiving an F09 fault code, check the gap spacing by holding two quarters together and sliding them through the gap. There should be a slight resistance.

PART 15 – MAINTENANCE

A. MAINTENANCE PROCEDURES

Periodic maintenance should be performed once a year by a qualified service technician to assure that all the equipment is in safe efficient operation. The owner can make necessary arrangements with a qualified heating contractor for periodic maintenance of the boiler. Installer must also inform the owner that the lack of proper care and maintenance of the boiler may result in a hazardous condition. The installer should discuss the contents of the User's Information Manual with the owner.

⚠ WARNING

BEFORE EACH HEATING SEASON a trained and qualified service technician should perform the inspections and maintenance procedures as identified in this manual. In addition, the maintenance and care of the boiler outlined in this manual must be performed to assure maximum efficiency and reliability. Failure to do so could result in substantial property damage, serious personal injury, or death.

⚠ WARNING

The combustion chamber insulation in this product contains ceramic fiber material. Ceramic fibers can be converted to cristobalite in very high temperature applications. The International Agency for Research on Cancer (IARC) has concluded, “Crystalline silica inhaled in the form of quartz or cristobalite from occupational sources is carcinogenic to humans (Group 1).”

- Avoid breathing dust and contact with skin and eyes.
- Use NIOSH certified dust respirator (N95). This type of respirator is based on the OSHA requirements for cristobalite at the time this document was written. Other types of respirators may be needed depending on job site conditions. Current NIOSH recommendations can be found on the NIOSH website at http://www.cdc.gov/niosh/homepage.html. NIOSH approved respirators, manufacturers, and phone numbers are also listed on this website.
- Wear long-sleeved, loose fitting clothing, gloves, and eye protection.
- Apply enough water to the combustion chamber to prevent dust.
- Wash potentially contaminated clothes separately from other clothing. Rinse clothes washer thoroughly.

NIOSH stated First Aid.

- Eye: Irrigate immediately.
- Breathing: Fresh Air.

B. MAINTENANCE SCHEDULE FOR THE SERVICE TECHNICIAN

The following maintenance should be performed annually by a qualified service technician:

General

- Attend to any reported problems.
- Inspect the interior of the boiler jacket area; clean and vacuum if necessary.
- Clean the condensate trap and fill with fresh water.
- Check for water, gas, flue and condensate leaks.
- Verify flue vent piping and air inlet piping are in good condition, properly supported, and tightly sealed.
- Check boiler water pressure, piping and expansion tank.
- Check control settings.
- Check ignition electrode. Sand off any white oxide. Clean and reposition.
- Check ignition and ground wiring.
- Check all control wiring and connections.
- Check burner flame pattern (stable and uniform).

Additional Items if Combustion or Performance is Poor

- Clean heat exchanger and flue ways.
- Remove burner assembly and clean burner head using compressed air only.

Once the maintenance items are completed, review service with the owner.

C. COMBUSTION CHAMBER COIL CLEANING INSTRUCTIONS

*Before beginning this procedure, you must have on hand the following items:

- A nylon, stainless or brass brush (not steel)
- A liquid calcium and lime deposit remover
- Gloves, eye protection

1. Shut down the boiler by using the following steps:
   a. Close the gas valve, shut down the unit and wait for the unit to be cool to the touch.
   b. Disconnect the condensate hose from the **outside** connection, **(not from the boiler side)**, so flow can be observed.
   c. Disconnect connections from the gas valve, spark electrode and flame rectification probe and combustion blower.
   d. Remove the (4) screws on the aluminum ½" NPT connector on the gas valve.
   e. Disconnect the wiring connected to the combustion blower motor.
   f. Remove the (6) 10MM nuts from the burner plate assembly to access the coils.
   g. Pull the entire burner plate assembly with blower still attached towards you, while removing or pushing aside any wiring to allow the removal of the assembly.

2. Using a spray bottle filled with calcium and lime deposit remover, spray liberally on the coils, making sure the solution penetrates and funnels down through the condensate hose. If the condensate hose is blocked, let the chemical penetrate for at least 15 minutes or until it drains.

3. Use the nylon, stainless or brass brush (do not use steel) and scrub coils to remove any buildup. Then vacuum the debris from the coils. WARNING: Follow above precautions.

4. Spray the coils with clear water, making sure to confine the spray to the area being cleaned (try to avoid getting the back ceramic wall of the unit wet). Flush the combustion chamber with fresh water. At this point, the boiler should be ready to power back up.

Before powering up the boiler follow the steps below:

a. Re-install the burner assembly.
b. Replace the (6) 10MM nuts to the burner plate.
c. Re-connect all wiring connections.
e. Replace the (4) screws on the aluminum ½" NPT connector on the gas valve. Turn the gas back on. (IMPORTANT: CHECK FOR GAS LEAKS.)
f. Re-set thermostats (IMPORTANT: MAKE SURE EXHAUST VENT IS NO LONGER BLOCKED!)
g. Turn the boiler back on and observe condensate flow.
h. Re-connect the condensate hose to the outside connection.

⚠ WARNING
Do not use solvents to clean any of the burner components. The components could be damaged, resulting in unreliable or unsafe operation. Failure to do so could result in death or serious injury.

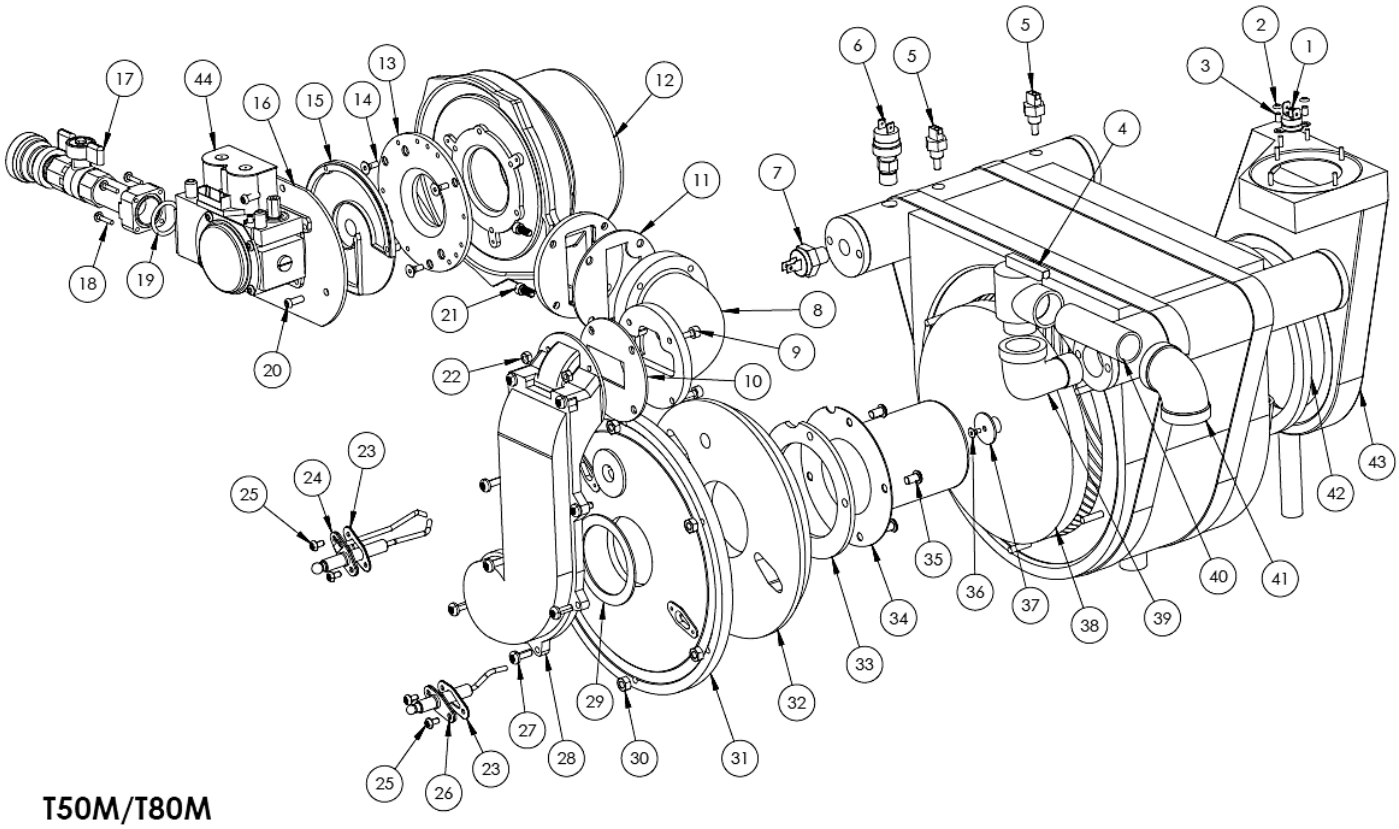

T50M/T80M

REPLACEMENT PARTS					
Item #	Description	Part #	Item #	Description	Part #
1	Thermodisc Flue ECO 210°F	7250P-089	22	Nut M5 (Aluminum Elbow to Air Channel)	7250P-063
2	Steel Push Retainer (Thermodisc Flue ECO)	7250P-151	23	Gasket (Flame Rec./Spark Electrode)	7250P-005
3	PVC Black Tubing 1/8 ID (Thermodisc Flue ECO)	7250P-311	24	Spark Electrode (w/Gasket)	7250P-421 (T50M)
4	Relief Valve	7250P-080			7250P-058 (T80M)
5	Thermistor	7250P-059	25	Screws M4 x 8MM (Probe/Electrode)	7250P-069
6	Water Pressure Switch	7250P-081	26	Flame Rectification Probe (w/Gasket)	7250P-049
7	ECO High Limit Sensor	7250P-019	27	Screws Torx M5 X 22MM (Air Channel to Burner Door)	7250P-206
8	Aluminum Elbow	7250P-445	28	Air Channel	7250P-178
9	Screws M5 X 25MM (Aluminum Elbow to Air Channel)	7250P-061	29	Gasket (Burner Door to Air Channel)	7250P-170
10	Gasket (Aluminum Elbow to Air Channel)	7250P-003	30	Nuts M6 (Burner Door)	7500P-067
11	Gasket (Aluminum Elbow to Combustion Blower)	7250P-144	31	Burner Door	7250P-169
12	Combustion Blower	7250P-085	32	Burner Door Ceramic Refractory	7250P-161
13	Gas Valve Adapter Plate (w/Screws)	7250P-644	33	Gasket (Burner)	7250P-070
14	Screws M5 x 12MM (Gas Valve Adapter Plate)	7250P-484	34	Burner (w/ Gasket)	7250P-216 (T50M)
15	Swirl Plate	7500P-091 (T50M)			7250P-248 (T80M)
		7500P-092 (T80M)	35	Screws (Burner)	7250P-204
16	Dungs Gas Valve	7250P-448 (T50M)	36	Screw M4 x 8MM (Ceramic Target Wall)	7250P-704
		7250P-449 (T80M)	37	Washer M4 (Ceramic Target Wall)	7500P-109
17	Gas Piping Assembly (w/Shut-off Valve, Screws)	N/A	38	Ceramic Target Wall	7250P-160
18	Screws M4 x 12MM (Gas Valve Piping Assy)	7500P-099	39	Brass 90° Street Elbow 3/4 NPT	7250P-212
19	O-Ring (Gas Valve Piping Assy)	7500P-094	40	Brass Nipple 3/4 NPT x 3"	SN1018
20	Screws M4 x 18MM (Gas Valve)	7250P-716 (T50M)	41	Brass 90° Elbow 3/4 NPT	7250P-313
	Screws M4 x 20MM (Gas Valve)	7250P-717 (T80M)	42	Gasket (Top Flue Exhaust to Module)	7250P-428
21	Screw M5 x 20MM (Combustion Blower)	7250P-060	43	Top Flue Exhaust	7250P-394
			44	24VAC GAS VALVE COIL ONLY - GREY	7350P-624

LP-185-A
01/11/11

Figure 31

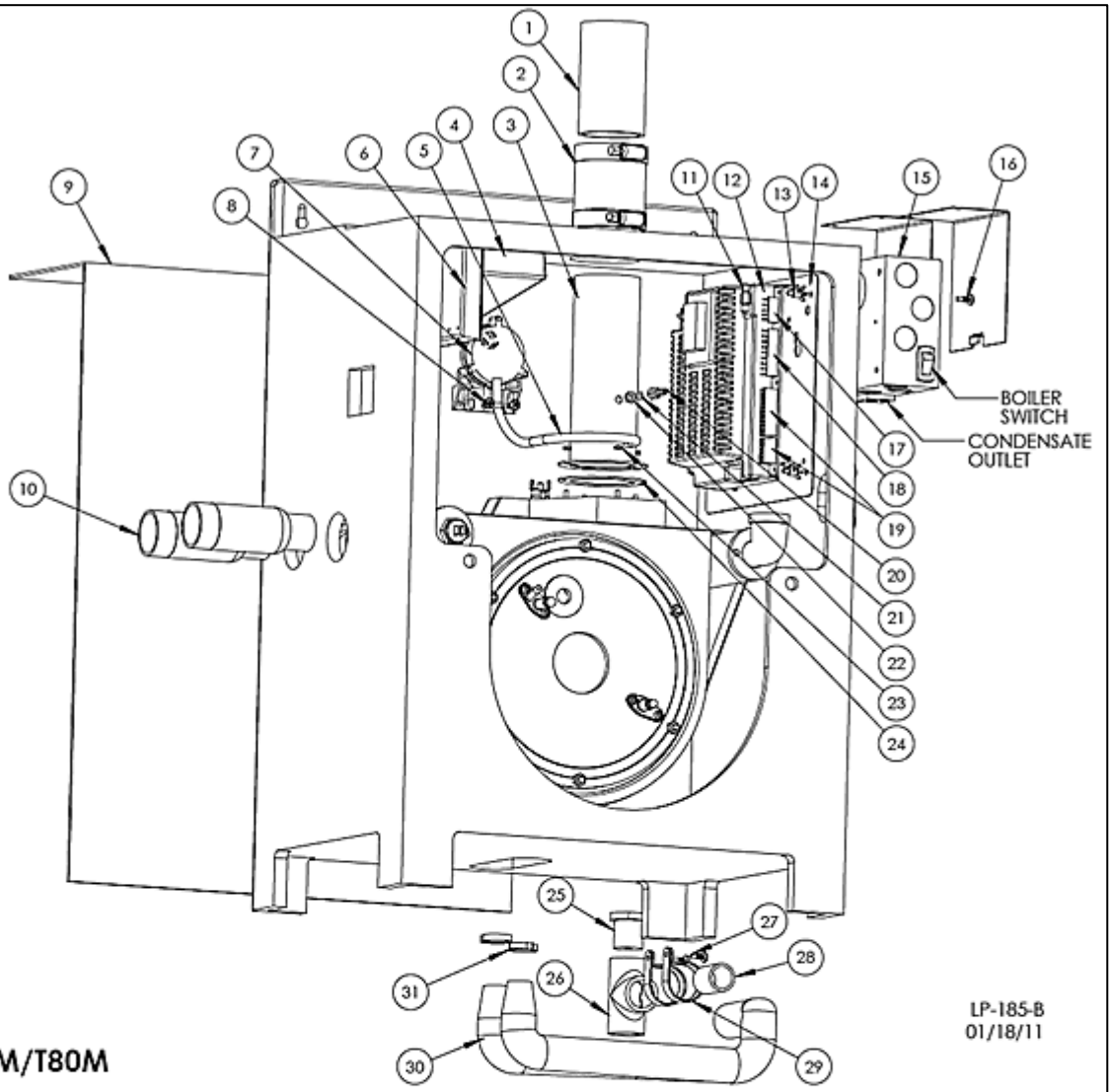

REPLACEMENT PARTS					
Item #	Description	Part #	Item #	Description	Part #
1	Exhaust Vent Pipe - 2" PVC	N/A	17	5 Pin Wiring Harness (location)	7250P-696
2	Pipe Coupling	F3001	18	9 Pin Wiring Harness (location)	7250P-697
3	Exhaust Manifold Tube	7250P-444	19	Low Voltage Wiring Harness (location)	7250P-700
4	Air Inlet Baffle	7250P-145	20	Hose Barb 1/4 x 10-32 (Blocked Vent Pressure Switch)	7250P-154
5	Plastic Tubing 3/16" ID (Blocked Vent Pressure Switch)	7000P-805	21	O-Ring 007 (Blocked Vent Pressure Switch)	7250P-152
6	Control Board Display (w/Ribbon Cable)	7250P-091	22	S.S. Hex Nut 10-32 (Blocked Vent Pressure Switch)	7250P-153
7	Blocked Vent Pressure Switch	7250P-150	23	S.S. Hex Nuts	7250P-559
8	Screws #8 x 1/2" (Blocked Vent Pressure Switch)	7250P-133	24	Gasket (Top Flue Exhaust Pipe)	7250P-427
9	Cover	N/A	25	Poly Plug 3/4 NPT (Condensate Assy)	7250P-647
10	Brass Nipple 1 x 1-1/4 x 4-5/8"	7250P-008	26	PVC Tee Sch. 40 3/4 NPT (Condensate Assy)	7250P-646
11	Fuse (Control Board)	7250P-378	27	Screw #8 x 1/2" (Condensate Assy)	7250P-133
12	Control Board (w/Fuse)	See Table.	28	PVC Nipple Sch. 80 3/4 NPT (Condensate Assy)	7250P-648
13	Control Board Hold Down Clips	7250P-352	29	Cable Clamp (Condensate Assy)	7250P-649
14	Control Board Mounting Panel (w/Screws)	7250P-651	30	Condensate Hose Assy	7250P-460
15	Electrical Box (w/Screws, Covers)	7250P-114	31	Hose Clamp (Condensate Assy)	7250P-215
16	Screws #8 x 1/2" (Electrical Box)	7250P-133			

Figure 32

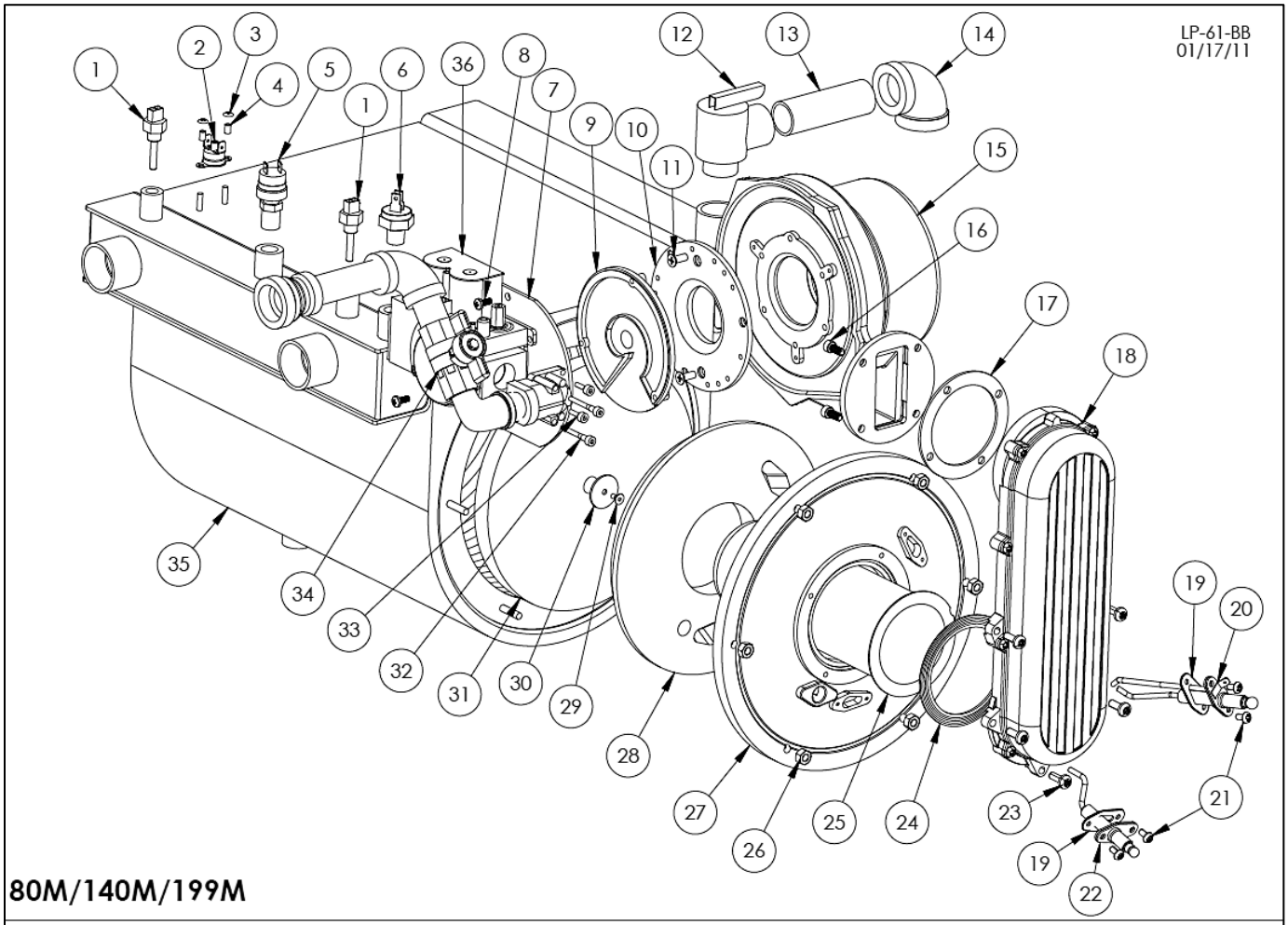

80M/140M/199M

REPLACEMENT PARTS

Item #	Description	Part #	Item #	Description	Part #
1	Thermistor	7250P-667	18	Air/Gas Channel	7250P-685 (80M)
2	Thermodisc Flue ECO 210°F	7250P-089			7250P-687 (140M/199M)
3	Steel Push Retainer (Thermodisc Flue ECO)	7250P-151	19	Gasket (Flame Rec./Spark Electrode)	7250P-005
4	PVC Black Tubing 1/8 ID (Thermodisc Flue ECO)	7250P-311	20	Spark Electrode (w/Gasket)	7350P-020
5	Water Pressure Switch	7250P-096	21	Screws M4 x 8MM (Probe/Electrode)	7250P-069
6	Eco/High Limit Sensor	7250P-019	22	Flame Rectification Probe (w/Gasket)	7500P-039
7	Dungs Gas Valve	7250P-450 (80M)	23	Screws Torx M5 x 22M (Air/Gas Channel to Burner Door)	7250P-206
		7250P-451 (140M)	24	Gasket (Air/Gas Channel to Burner)	7500P-074
		7250P-452 (199M)	25	NIT Burner	7500P-016 (80M)
8	Screws M4 x 20MM (Gas Valve)	7250P-717 (80M)			7250P-102 (140M)
	Screws M4 x 25 MM (Gas Valve)	7250P-718 (140M/199M)			7250P-117 (199M)
9	Swirl Plate	7500P-092 (80M)	26	Nut M6 (Burner Door)	7500P-067
		7500P-093 (140M/199M)	27	Burner Door	7250P-684
10	Gas Valve Adapter Plate (w/Screws)	7250P-644	28	Burner Door Ceramic Refractory	7250P-702
11	Screws M5 x 12MM (Gas Valve Adapter Plate)	7500P-105	29	Screw M4 x 8MM (Ceramic Target Wall)	7250P-704
12	Relief Valve	7250P-080	30	Washer M4 (Ceramic Target Wall)	7500P-109
13	Brass Nipple 3/4 NPT x 3"	SN1018	31	Ceramic Target Wall	7250P-160
14	Brass 90° Elbow - 3/4 NPT	7250P-313	32	Screws M4 x 30MM Allen Head (Gas Piping Assy)	N/A
15	Combustion Blower (w/Gasket)	7250P-085 (80M)	33	Screws M4 x 12MM Allen Head (Gas Piping Assy)	N/A
		7250P-086 (140M)	34	Gas Piping Assembly (w/Shut-off Valve, Screws)	7250P-705
		7250P-087 (199M)	35	Welded Module	7250P-298 (80M)
16	Screws M5 x 14MM (Combustion Blower)	7250P-478			7250P-299 (140M)
17	Gasket (Air/Gas Channel to Combustion Blower)	7500P-075			7250P-300 (199M)
			36	24VAC GAS VALVE COIL ONLY - GREY	7350P-624

Figure 33

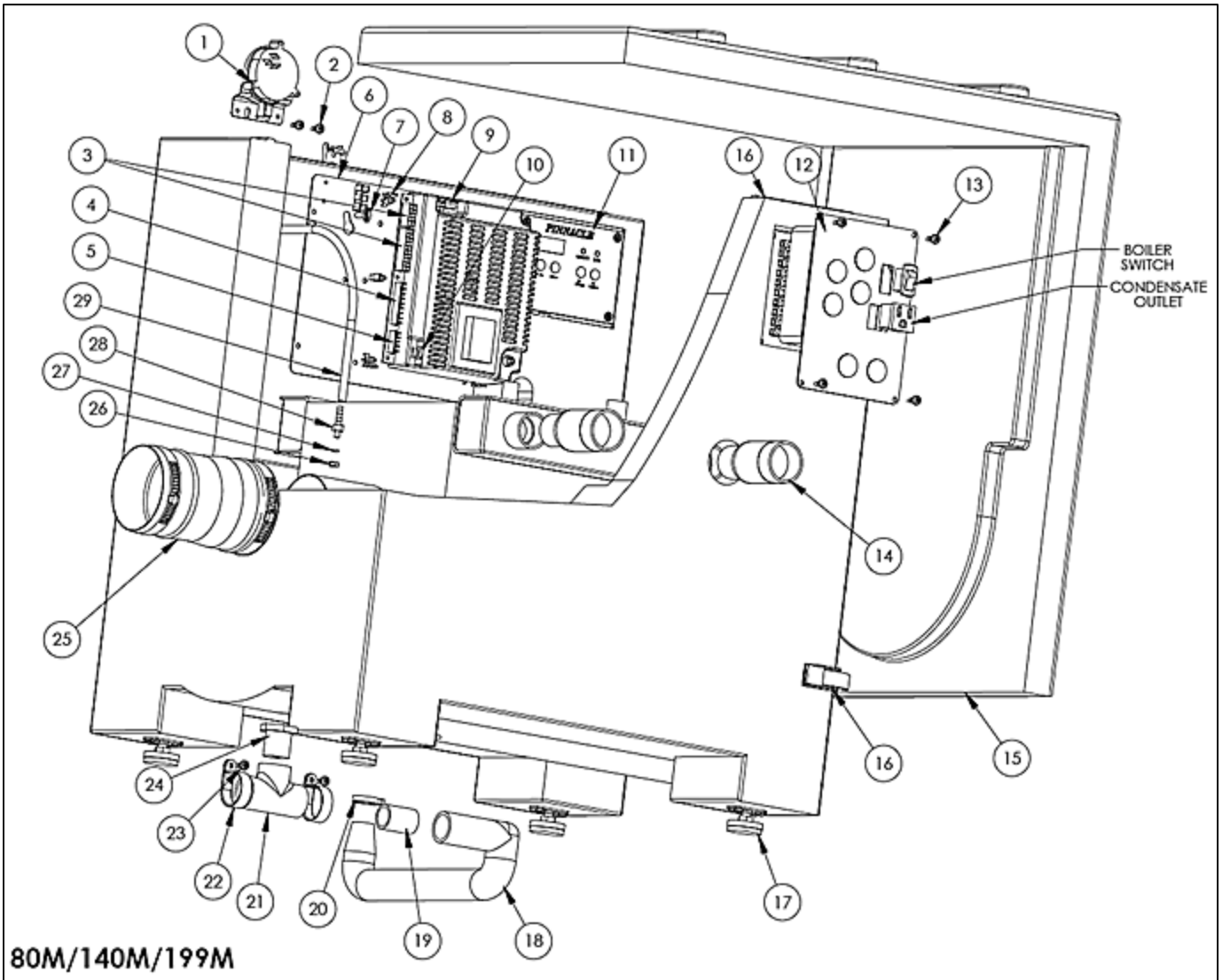

REPLACEMENT PARTS					
Item #	Description	Part #	Item #	Description	Part #
1	Blocked Vent Pressure Switch	7250P-150	16	Cabinet Latch and Gasket Kit (w/Screws)	7250P-671
2	Screws #8 x 1/2" (Blocked Vent Pressure Switch)	7250P-133	17	Leveling Foot	7250P-673
3	Low Voltage Wiring Harness (location)	7250P-700	18	Condensate Hose Assy	7250P-724
4	9 Pin Wiring Harness (location)	7250P-697	19	PVC Nipple Sch. 80 3/4 NPT (Condensate Assy)	7250P-648
5	5 Pin Wiring Harness (location)	7250P-696	20	Hose Clamp (Condensate Assy)	7250P-210
6	Control Board Mounting Panel (w/Screws)	7250P-651	21	PVC Tee Sch. 40 3/4 NPT (Condensate Assy)	7250P-646
7	Screw 1/4-20 x 1/2" (Control Board Mounting Panel)	7250P-184	22	Cable Clamp (Condensate Assy)	7250P-649
8	Control Board Hold Down Clips	7250P-352	23	Screw #8 x 1/2 Self Tapping (Condensate Assy)	7250P-133
9	Control Board (w/Fuse)	See Table.	24	Poly Plug 3/4 NPT (Condensate Assy)	7250P-647
10	Fuse (Control Board)	7250P-378	25	3" Vent Adapter	7250P-744 (80M) 7250P-735 (140M/199M)
11	Control Board Display (w/Ribbon Cable)	7250P-091	26	S.S. Hex Nut 10-32 (Blocked Vent Pressure Switch)	7250P-153
12	Electrical Box (w/Screws)	7250P-707	27	O-Ring 007 (Blocked Vent Pressure Switch)	7250P-152
13	Screws #8 x 1/2" Self Tapping (Electrical Box)	7250P-133	28	Hose Barb 1/4 x 10-32 (Blocked Vent Pressure Switch)	7250P-154
14	Brass Nipple 1 x 1-1/4 x 3-3/4"	7250P-221	29	Plastic Tubing 3/16" ID (Blocked Vent Pressure Switch	7000P-805
15	Cabinet Cover	7250P-235 (80M)			
		7250P-232 (140M/199M)			

LP-61-CC
08/27/12

Figure 34

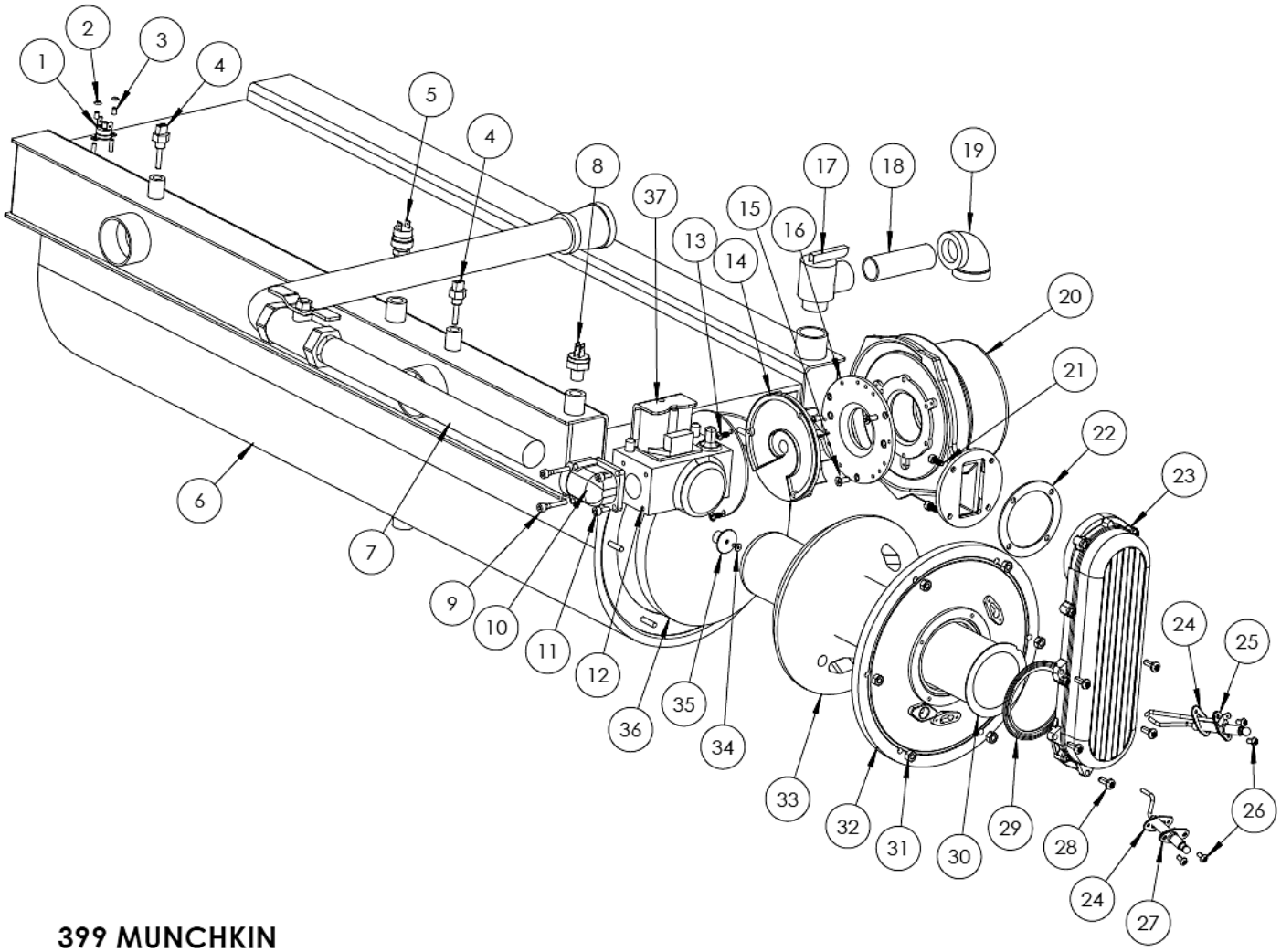

399 MUNCHKIN

REPLACEMENT PARTS					
Item #	Description	Part #	Item #	Description	Part #
1	Thermodisc Flue ECO 210°F	7250P-089	19	Brass 90° Elbow - 3/4" NPT	7250P-313
2	Steel Push Retainer (Thermodisc Flue ECO)	7250P-151	20	Combustion Blower (w/Gasket)	7350P-159
3	PVC Black Tubing 1/8 ID (Thermodisc Flue ECO)	7250P-311	21	Screws M5 x 12MM (Combustion Blower)	7250P-478
4	Thermistor	7250P-667	22	Gasket (Air/Gas Channel to Combustion Blower)	7500P-075
5	Water Pressure Switch	7250P-096	23	Air/Gas Channel	7250P-687
6	Welded Module	7250P-623	24	Gasket (Flame Rec./Spark Electrode)	7250P-005
7	Gas Valve Piping Assembly	7250P-706	25	Spark Electrode (w/Gasket)	7350P-020
8	Eco/High Limit Sensor	7250P-019	26	Screws M4 x 8MM (Probe/Electrode)	7250P-069
9	Screws M5 x 30MM Allen Head	N/A	27	Flame Rectification Probe (w/Gasket)	7250P-049
10	Right Angle Connector	7250P-723	28	Screws Torx M5 x 22MM (Air/Gas Channel to Burner Door)	7250P-206
11	Screws M5 x 12MM Allen Head	N/A	29	Gasket (Air/Gas Channel to Burner)	7500P-074
12	Dungs Gas Valve	7250P-710	30	NIT Burner	7250P-703
13	Screws M4 x 30MM Round Head (Gas Valve)	7250P-670	31	Nuts M6 (Burner Door)	7500P-067
14	Swirl Plate - Blk	7250P-712	32	Burner Door	7250P-684
15	Screws M5 x 12MM Flat Head (Adapter Plate)	7500P-105	33	Burner Door Ceramic Refractory	7250P-702
16	Gas Valve Adapter Plate	7250P-711	34	Screw M4 x 8MM (Ceramic Target Wall)	7250P-704
17	Relief Valve	7250P-080	35	Washer M4 (Ceramic Target Wall)	7500P-109
18	Brass Nipple - 3/4 NPT x 3"	SN1018	36	Ceramic Target Wall	7250P-160
			37	24VAC GAS VALVE COIL ONLY - GREY	7350P-623

LP-121-AA
03/2/15

Figure 35

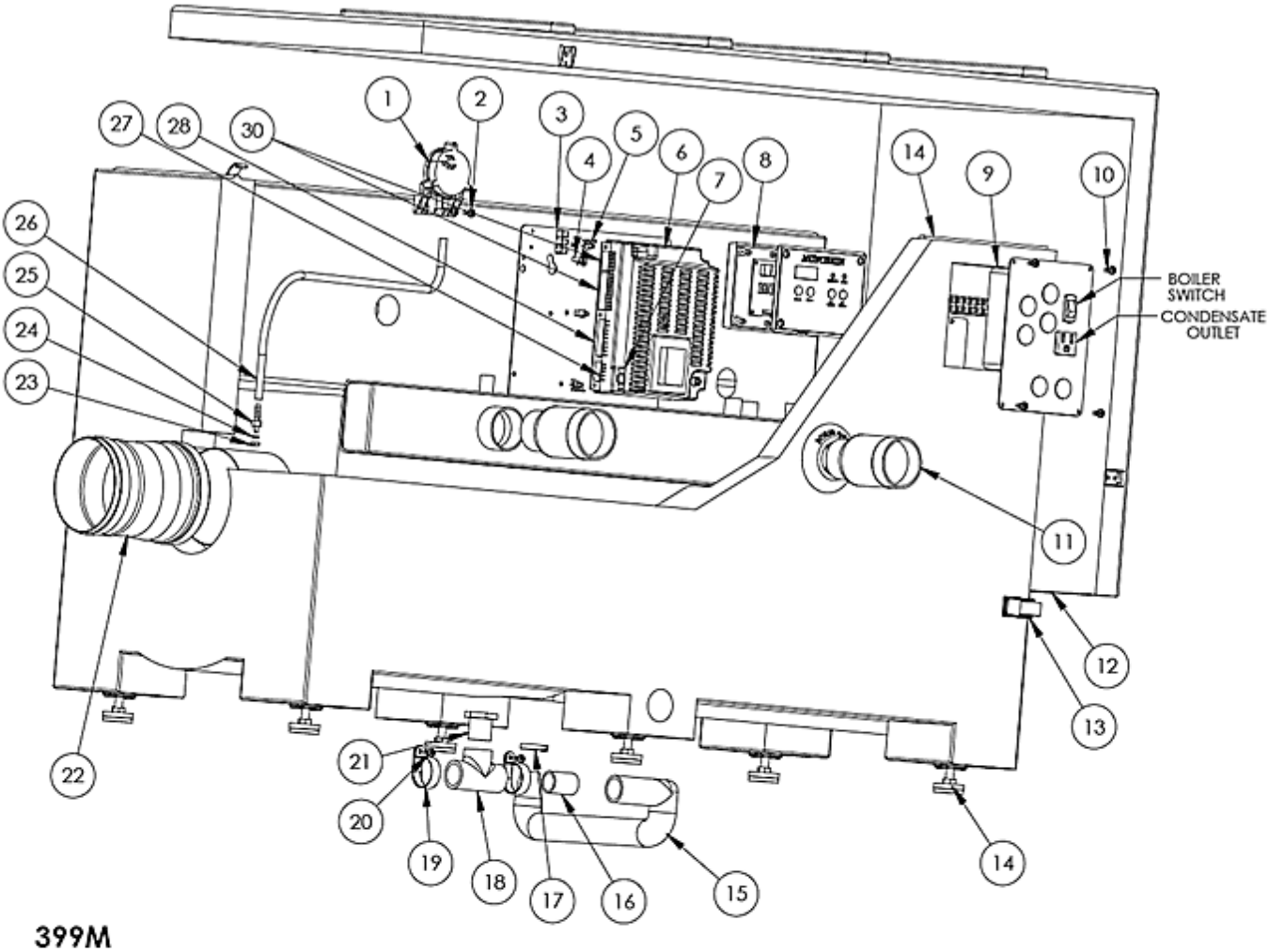

399M

REPLACEMENT PARTS					
Item #	Description	Part #	Item #	Description	Part #
1	Blocked Vent Pressure Switch	7250P-150	15	Condensate Hose Assy	7250P-724
2	Screws #8 x 1/2" Self Tapping (Blocked Vent Pressure Switch)	7250P-133	16	PVC Nipple Sch. 80 3/4 NPT (Condensate Assembly)	7250P-648
3	Control Board Mounting Panel (w/Screws)	7250P-651	17	Hose Clamp (Condensate Assembly)	7250P-210
4	Screw 1/4-20 x 1/2" (Control Board Mounting Panel)	7250P-184	18	PVC Tee Sch. 30 3/4 NPT (Condensate Assembly)	7250P-646
5	Control Board Hold Down Clips	7250P-352	19	Cable Clamp (Condensate Assembly)	7250P-649
6	Control Board (w/Fuse)	See Table.	20	Screw #8 x 1/2" Self Tapping (Condensate Assembly)	7250P-133
7	Fuse (Control Board)	7250P-378	21	Poly Plug 3/4 NPT (Condensate Assembly)	7250P-647
8	Control Board Display (w/Ribbon Cable)	7250P-091	22	4" Z-Flex Adapter for PVC	7250P-733
9	Electrical Box (w/Screws)	7250P-707	23	S.S. Hex Nut 10-32 (Blocked Vent Pressure Switch)	7250P-153
10	Screws #8 x 1/2" Self Tapping (Electrical Box)	7250P-133	24	O-Ring 007 (Blocked Vent Pressure Switch)	7250P-152
11	Brass Nipple 1-1/2 x 2 x 3-3/4"	7250P-514	25	S.S. Hose Barb 1/4 x 10-32 (Blocked Vent Pressure Switch)	7250P-154
12	Cabinet Cover	7250P-501	26	Plastic Tubing 3/16" ID (Blocked Vent Pressure Switch)	7000P-805
13	Cabinet Latch and Gasket Kit (w/Screws)	7250P-671	27	5 Pin Wiring Harness (location)	7250P-696
14	Leveling Foot	7250P-673	28	9 Pin Wiring Harness (location)	7250P-697
			29	Low Voltage Wiring Harness (location)	7250P-699

LP-121-BB
01/18/11

Figure 36

Munchkin R1 Model	Control Board Part Number	Munchkin R1 Model Model	Control Board Part Number
80M	7250P-1100	399M	7250P-1108
80M High Altitude	7250P-1101	399M High Altitude	7250P-1109
140M	7250P-1102	T50M	7250P-1112
140M High Altitude	7250P-1103	T50M High Altitude	7250P-1113
199M	7250P-1104	T80M	7250P-1114
199M High Altitude	7250P-1105	T80M High Altitude	7250P-1115

Table 19 – Munchkin R1 Model Control Board Part Numbers

Munchkin R2 Model	Control Board Part Number	Munchkin R2 Model Model	Control Board Part Number
80M	7250P-1200	399M Vilvario	7250P-1204
140M	7250P-1201	399M Dungs	7250P-1205
199M	7250P-1202	T50M	7250P-1208
		T80M	7250P-1209

Table 20 – Munchkin R2 Model Control Board Part Numbers

BOILER START-UP REPORT

LIGHT OFF ACTIVITIES		DATE COMPLETED _____			
1) Fill the heating system	Check all piping and gas connections, verify all are tight				
	Pressurize system (12-15 PSI)	____ PSI			
	Add water to prime condensate hose				
	What percentage of propylene glycol is installed in the system (0-50%)	____ %			
	Verify near boiler piping is properly supported				
2) Check gas pipe	Leak test using locally approved methods (consult jurisdictional code book)				
	Check incoming gas pressure (3.5” to 14” W.C.)	____ in w.c.	Static		
	What is the “drop” on light off (No more than 1” W.C.)	____ in w.c.	Dynamic		
3) Check combustion	Check and adjust (if necessary) carbon dioxide content	____% CO2	High Fire	____% CO2	Low Fire
	Check and adjust (if necessary) carbon monoxide content	____ppm CO	High Fire	____ ppm CO	Low Fire
4) Verify system operation	Turn up thermostat to verify wiring connections				
5) Record ionization current	Check uA reading at d7 on the status menu (see start-up section)	____ uA	High Fire	____ uA	Low Fire
6) Record system settings	Record heating curve (with optional Vision One kit, record steps)	____*8	____*9	____*10	____*11
7) Indirect water boiler	Verify safety and operation of the indirect water heater, record settings	____de	____dh		
8) Convert the boiler	If necessary, convert the boiler to the proper gas type				
	Locate the stickers in the appropriate locations on the boiler				
	Verify combustion settings after gas conversion, Carbon Dioxide	____% CO2	High Fire	____% CO2	Low Fire
	Verify combustion settings after gas conversion, Carbon Monoxide	____ppm CO	High Fire	____ppm CO	Low Fire
	Mail in the conversion registration				
Notes:					

Table 21

MAINTENANCE REPORT

CAUTION

In unusually dirty or dusty conditions, care must be taken to keep boiler cabinet door in place at all times. Failure to do so VOIDS WARRANTY!

⚠ WARNING

Allowing the boiler to operate with a dirty combustion chamber will hurt operation. Failure to clean the heat exchanger as needed by the installation location could result in boiler failure, property damage, personal injury, or death. Such product failures ARE NOT covered under warranty.

The boiler requires minimal periodic maintenance under normal conditions. However, in unusually dirty or dusty conditions, periodic vacuuming of the cover to maintain visibility of the display and indicators is recommended.

Periodic maintenance should be performed once a year by a qualified service technician to assure that all the equipment is operating safely and efficiently. The owner should make necessary arrangements with a qualified heating contractor for periodic maintenance of the boiler. Installer must also inform the owner that the lack of proper care and maintenance of the boiler may result in a hazardous condition.

INSPECTION ACTIVITIES		DATE LAST COMPLETED			
PIPING		1st YEAR	2nd YEAR	3rd YEAR	4th YEAR*
Near boiler piping	Check boiler and system piping for any sign of leakage, make sure they are properly supported.				
Vent	Check condition of all vent pipes and joints.				
Gas	Check Gas piping, test for leaks and signs of aging. Make sure all pipes are properly supported.				
SYSTEM					
Visual	Do a full visual inspection of all system components.				
Functional	Test all functions of the system (Heat, Safeties)				
Temperatures	Verify safe settings on heater or Anti-Scald Valve				
Temperatures	Verify programmed temperature settings				
ELECTRICAL					
Switch and Plug	Verify ON/OFF switch and convenience plug are functional.				
Connections	Check wire connections. Make sure they are tight.				
Smoke and CO detector	Verify devices are installed and working properly. Change batteries if necessary.				
Circuit Breakers	Check to see that the circuit breaker is clearly labeled. Exercise circuit breaker.				
CHAMBER/BURNER					
Combustion Chamber	Check burner tube and combustion chamber coils. Clean according to maintenance section of manual. Vacuum combustion chamber.				
Spark Electrode	Clean. Set gap at ¼".				
Flame Probe	Clean. Check ionization in uA (d7 on status menu in Start-up Procedures). Record high fire and low fire.				
CONDENSATE					
Neutralizer	Check condensate neutralizer. Replace if necessary.				
Condensate hose	Disconnect condensate hose. Clean out dirt. Fill with water to level of outlet and re-install. (NOTE: Verify the flow of condensate, making sure that the hose is properly connected during final inspection.)				
GAS					
Pressure	Measure incoming gas pressure (3.5" to 14" W.C.)				
Pressure Drop	Measure drop in pressure on light off (no more than 1" W.C.)				
Check gas pipe for leaks	Check piping for leaks. Verify that all are properly supported.				
COMBUSTION					
CO/CO2 Levels	Check CO and CO2 levels in Exhaust (See Start-up Procedures for ranges). Record at high and low fire.				
SAFETIES					
ECO (Energy Cut Off)	Check continuity on Flue and Water ECO. Replace if corroded.				
Water Pressure Switch	Check operation and for signs of leakage. Replace if corroded.				
Thermistors	Check wiring. Verify through ohms reading.				
FINAL INSPECTION					
Check list	Verify that you have completed entire check list. WARNING: FAILURE TO DO SO COULD RESULT IN SERIOUS INJURY OR DEATH.				
Homeowner	Review what you have done with the homeowner.				

Table 22 - *Continue annual maintenance beyond the 4th year as required.

ADDITIONAL INSTALLATION REQUIREMENTS FOR THE COMMONWEALTH OF MASSACHUSETTS

In the Commonwealth of Massachusetts, the installer or service agent shall be a plumber or gas fitter licensed by the Commonwealth.

When installed in the Commonwealth of Massachusetts or where applicable state codes may apply; the unit shall be installed with a CO detector per the requirements listed below.

5.08: Modifications to NFPA-54, Chapter 10

(1) Revise NFPA-54 section 10.5.4.2 by adding a second exception as follows:

Existing chimneys shall be permitted to have their use continued when a gas conversion burner is installed, and shall be equipped with a manually reset device that will automatically shut off the gas to the burner in the event of a sustained back-draft.

(2) Revise 10.8.3 by adding the following additional requirements:

(a) For all side wall horizontally vented gas fueled equipment installed in every dwelling, building or structure used in whole or in part for residential purposes, including those owned or operated by the Commonwealth and where the side wall exhaust vent termination is less than seven (7) feet above finished grade in the area of the venting, including but not limited to decks and porches, the following requirements shall be satisfied:

1. INSTALLATION OF CARBON MONOXIDE DETECTORS. At the time of installation of the side wall horizontal vented gas fueled equipment, the installing plumber or gasfitter shall observe that a hard wired carbon monoxide detector with an alarm and battery back-up is installed on the floor level where the gas equipment is to be installed. In addition, the installing plumber or gasfitter shall observe that a battery operated or hard wired carbon monoxide detector with an alarm is installed on each additional level of the dwelling, building or structure served by the side wall horizontal vented gas fueled equipment. It shall be the responsibility of the property owner to secure the service of qualified licensed professionals for the installation of hard wired carbon monoxide detectors

a. In the event that the side wall horizontally vented gas fueled equipment is installed in a crawl space or an attic, the hard wired carbon monoxide detector with alarm and battery back-up may be installed on the next adjacent floor level.

b. In the event that the requirements of this subdivision cannot be met at the time of completion of installation, the owner shall have a period of thirty (30) days to comply with the above requirements; provided, however, that during said thirty (30) day period, a battery operated carbon monoxide detector with an alarm shall be installed.

2. APPROVED CARBON MONOXIDE DETECTORS. Each carbon monoxide detector as required in accordance with the above provisions shall comply with NFPA 720 and be ANSI/UL 2034 listed and IAS certified.

3. SIGNAGE. A metal or plastic identification plate shall be permanently mounted to the exterior of the building at a minimum height of eight (8) feet above grade directly in line with the exhaust vent terminal for the horizontally vented gas fueled heating appliance or equipment. The sign shall read, in print size no less than one-half (1/2) inch in size, "GAS VENT DIRECTLY BELOW, KEEP CLEAR OF ALL OBSTRUCTIONS".

4. INSPECTION. The state or local gas inspector of the side wall horizontally vented gas fueled equipment shall not approve the installation unless, upon inspection, the inspector observes carbon monoxide detectors and signage installed in accordance with the provisions of 248 CMR 5.08 (2)(a) 1 through 4.

(b) EXEMPTIONS: the following equipment is exempt from 248 CMR 5.08 (2)(a) 1 through 4:

1. The equipment listed in Chapter 10 entitled "Equipment Not Required to be Vented" in the most current edition of NFPA 54 as adopted by the Board; and

2. Product Approved side wall horizontally vented gas fueled equipment installed in a room or structure separate from the dwelling, building or structure used in whole or in part for residential purposes.

(c) MANUFACTURER REQUIREMENTS – GAS EQUIPMENT VENTING SYSTEM PROVIDED. When the manufacturer of Product Approved side wall horizontally vented gas equipment provides a venting system design or venting system components with the equipment, the instructions provided by the manufacturer for installation of the equipment and the venting system shall include:

1. Detailed instructions for the installation of the venting system design or the venting system components; and

2. A complete parts list for the venting system design or venting system.

(d) MANUFACTURER REQUIREMENTS – GAS EQUIPMENT VENTING SYSTEM NOT PROVIDED. When the manufacturer of a Product Approved side wall horizontally vented gas fueled equipment does not provide the parts for venting the flue gases, but identifies "special venting systems", the following requirements shall be satisfied by the manufacturer:

1. The referenced "special venting system" instructions shall be included with the appliance or equipment installation instructions; and

2. The "special venting systems" shall be Product Approved by the Board, and the instructions for that system shall include a parts list and detailed installation instructions.

(e) A copy of all installation instructions for all Product Approval side wall horizontally vented gas fueled equipment, all venting instructions, all parts lists for venting instructions, and/or all venting design instructions shall remain with the appliance or equipment at the completion of the installation.

MAINTENANCE NOTES

HTP CUSTOMER INSTALLATION RECORD FORM

The following form should be completed by the installer for you to keep as a record of the installation in case of a warranty claim. After reading the important notes at the bottom of the page, please also sign this document.

Customer's Name:	
Installation Address:	
Date of Installation:	
Installer's Code/Name:	
Product Serial Number(s):	
Comments:	
Installer's Phone Number:	
Signed by Installer:	
Signed by Customer:	

IMPORTANT NOTES:

Customer: Please only sign after the installer has reviewed the installation, safety, proper operation and maintenance of the system. In the case that the system has any problems, please call the installer. If you are unable to make contact, please contact your HTP Sales Representative.

Distributor/Dealer: Please insert contact details.