American Standard
HEATING & AIR CONDITIONING

Split System Heat Pump Product Data

4A6H3018-060

1½ – 5 Tons

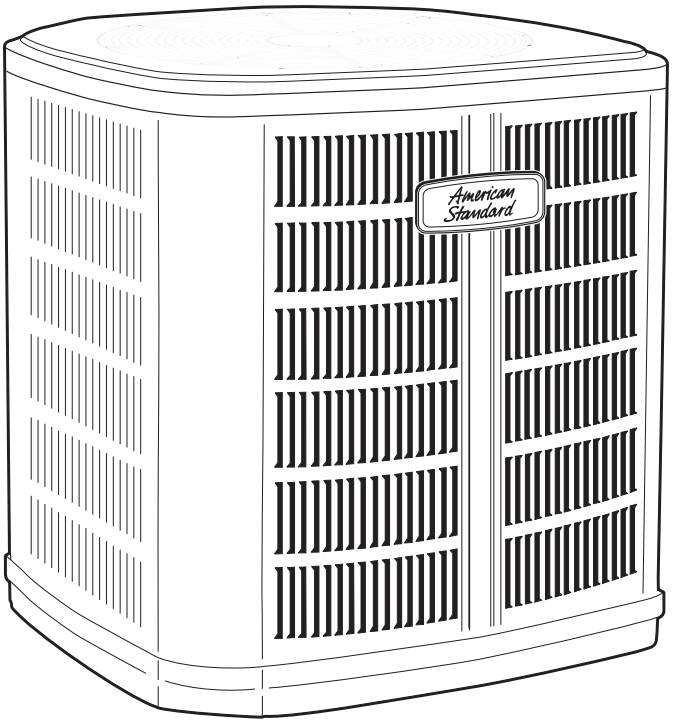

PUB. NO. 12-1248-12

American Standard
HEATING & AIR CONDITIONING

Features and Benefits

- **DURATION™** compressor
- All aluminum **Spine Fin™** coil
- **Easy-Sess™** cabinet, service access and refrigerant connections with full coil protection
- **DuraBase™** base, fast complete drain, weather proof
- Glossy corrosion resistant finish
- Internal compressor high/low pressure and temperature protection
- 030 ships with Start Kit
- Liquid line filter-drier
- Polyslate gray cabinet
- Low Pressure Switch
- Demand Defrost Control
- High Pressure Switch
- R-410A refrigerant
- 100% line run test
- Low ambient cooling to 55°F as shipped
- Low ambient cooling to 30°F with EDC accessory AY28X084 and TXV

- **Extended warranties available**

Contents

Features and Benefits 2

General Data 4

Product Specifications 4
A-weighted Sound Power Level [dB(A)] 4
Accessory Description and Usage 5
AHRI Standard Capacity Rating Conditions 5

Model Nomenclature 6

Electrical Data 7

Dimensions 10

Mechanical Specification Options 11

American Standard
HEATING & AIR CONDITIONING

General Data

Product Specifications

Model No. ①	4A6H3018D1000A	4A6H3024D1000A	4A6H3030C1000A	4A6H3036C1000A
Electrical Data V/Ph/Hz ②	208/230/1/60	208/230/1/60	208/230/1/60	208/230/1/60
Min Cir Ampacity	12	17	15	22
Max Fuse Size (Amps)	20	25	25	35
Compressor	DURATION™-SCROLL	DURATION™-SCROLL	DURATION™	DURATION™-SCROLL
RL Amps - LR Amps	9.0 - 48.8	12.8 - 59.1	11.5 - 63.5	16.7 - 79
Outdoor Fan FL Amps	0.77	0.77	0.74	0.92
Fan HP	1/8	1/8	1/8	1/5
Fan Dia (inches)	23.0	23.0	23.0	27.5
Coil	Spine Fin™	Spine Fin™	Spine Fin™	Spine Fin™
Refrigerant R-410A	5/5-LB/OZ	5/4-LB/OZ	6/05-LB/OZ	6/2-LB/OZ
Line Size - (in.) O.D. Gas ③	5/8	5/8	3/4	3/4
Line Size - (in.) O.D. Liquid ③	3/8	3/8	3/8	3/8
Charge Spec. Subcooling	12°F	12°F	8°F	8°F
Dimensions H x W x D (Crated)	34 x 30.1 x 33	34 x 30.1 x 33	38 x 30.1 x 33	38.4 x 35.1 x 38.7
Weight - Shipping	185	184	221	229
Weight - Net	160	159	193	198
Start Components	NO	NO	YES	NO
Sound Enclosure	NO	NO	NO	NO
Compressor Sump Heat	NO	NO	NO	NO
Optional Accessories: ④				
Anti-short Cycle Timer	TAYASCT501A	TAYASCT501A	TAYASCT501A	TAYASCT501A
Evaporator Defrost Control	AY28X084	AY28X084	AY28X084	AY28X084
Rubber Isolator Kit	BAYISLT101	BAYISLT101	BAYISLT101	BAYISLT101
Snow Leg-Base & Cap 4" High	BAYLEGS002	BAYLEGS002	BAYLEGS002	BAYLEGS002
Snow Leg-4" Extension	BAYLEGS003	BAYLEGS003	BAYLEGS003	BAYLEGS003
Extreme Condition Mounting Kit	BAYECMT023	BAYECMT023	BAYECMT023	BAYECMT004
Start Kit	BAYKSKT263	BAYKSKT263		BAYKSKT263
Crankcase Heater Kit	BAYCCHT302	BAYCCHT302	BAYCCHT300	BAYCCHT302
Seacoast Kit	BAYSEAC001	BAYSEAC001	BAYSEAC001	BAYSEAC001
Low Ambient Kit	BAYLOAM103	BAYLOAM103	BAYLOAM103	BAYLOAM103
Refrigerant Lineset ⑤	TAYREFLN9*	TAYREFLN9*	TAYREFLN7*	TAYREFLN7*

① Certified in accordance with the Air-Source Unitary Heat Pump equipment certification program which is based on AHRI Standard 210/240.
② Calculated in accordance with N.E.C. Only use HACR circuit breakers or fuses.
③ Standard line lengths - 60'. Standard lift - 60' Suction and Liquid line.
For Greater lengths and lifts refer to refrigerant piping software Pub# 32-3312-0†. (†denotes latest revision)
④ For accessory description and usage, see page 5.
⑤ * = 15, 20, 25, 30, 40 and 50 foot lineset available.

Sound Power Level

Model	A-Weighted Sound Power Level [dB(A)]	Full Octave Sound Power [dB]							
		63 Hz	125 Hz	250 Hz	500 Hz	1000 Hz	2000 Hz	4000 Hz	8000 Hz
4A6H3018D	71	76	69	66	69	67	61	53	49
4A6H3024D	71	76	69	66	69	67	61	53	49
4A6H3030C	76	80	72	61	64	70	70	61	56
4A6H3036C	72	84	75	70	72	67	62	57	50
4A6H3042B	75	83	74	68	71	68	63	59	55
4A6H3048B	75	83	72	67	70	69	65	59	56
4A6H3060B	75	78	71	68	69	68	66	63	62

Note: Rated in accordance with AHRI Standard 270-2008

General Data

Product Specifications

Model No. ①	4A6H3042B1000C	4A6H3048B1000C	4A6H3060B1000C
Electrical Data V/Ph/Hz ②	208/230/1/60	208/230/1/60	208/230/1/60
Min Cir Ampacity	26	28	34
Max Fuse Size (Amps)	45	50	60
Compressor	DURATION™ - SCROLL	DURATION™ - SCROLL	DURATION™ - SCROLL
RL Amps - LR Amps	19.9 - 109	21.8 - 117	26.3 - 134
Outdoor Fan FL Amps	0.97	1.01	0.94
Fan HP	1/5	1/5	1/5
Fan Dia (inches)	27.6	27.5	27.5
Coil	Spine Fin™	Spine Fin™	Spine Fin™
Refrigerant R-410A	7/07-LB/OZ	8/09-LB/OZ	8/14-LB/OZ
Line Size - (in.) O.D. Gas ③	3/4	7/8	7/8
Line Size - (in.) O.D. Liquid ③	3/8	3/8	3/8
Charge Spec. Subcooling	8°F	8°F	8°F
Dimensions H x W x D (Crated)	38.4 x 35.1 x 38.7	42.4 x 35.1 x 38.7	46.4 x 35.1 x 38.7
Weight - Shipping	253	269	284
Weight - Net	219	234	248
Start Components	NO	NO	NO
Sound Enclosure	NO	NO	NO
Compressor Sump Heat	NO	NO	NO
Optional Accessories: ④			
Anti-short Cycle Timer	TAYASCT501A	TAYASCT501A	TAYASCT501A
Evaporator Defrost Control	AY28X084	AY28X084	AY28X084
Rubber Isolator Kit	BAYISLT101	BAYISLT101	BAYISLT101
Snow Leg-Base & Cap 4" High	BAYLEGS002	BAYLEGS002	BAYLEGS002
Snow Leg-4" Extension	BAYLEGS003	BAYLEGS003	BAYLEGS003
Extreme Condition Mounting Kit	BAYECMT004	BAYECMT004	BAYECMT004
Start Kit	BAYKSKT263	BAYKSKT263	
Crankcase Heater Kit	BAYCCHT301	BAYCCHT301	BAYCCHT301
Seacoast Kit	BAYSEAC001	BAYSEAC001	BAYSEAC001
Low Ambient Kit	BAYLOAM103	BAYLOAM103	BAYLOAM103
Refrigerant Lineset ⑤	TAYREFLN7*	TAYREFLN3*	TAYREFLN3*

Accessory Description and Usage

Anti-Short Cycle Timer — Solid state timing device that prevents compressor recycling until five (5) minutes have elapsed after satisfying call or power interruptions. Use in area with questionable power delivery, commercial applications, long lineset, etc.

Evaporator Defrost Control — SPST Temperature actuated switch that cycles the condenser off as indoor coil reaches freeze-up conditions. Used for low ambient cooling to 30°F with TXV.

Rubber Isolators — Five (5) large rubber donuts to isolate condensing unit from transmitting energy into mounting frame or pad. Use on any application where sound transmission needs to be minimized.

Hard Start kit — Start capacitor and relay to assist compressor motor startup. Use in areas with marginal power supply, on long linesets, low ambient conditions, etc.

Extreme Condition Mount Kit — Bracket kits to securely mount condensing unit to a frame or pad without removing any panels. Use in areas with high winds, or on commercial roof tops, etc.

AHRI Standard Capacity Rating Conditions

AHRI STANDARD 210/240 RATING CONDITIONS —

(A) Cooling 80°F DB, 67°F WB air entering indoor coil, 95°F DB air entering outdoor coil.
(B) High Temperature Heating 47°F DB, 43°F WB air entering outdoor coil, 70°F DB air entering indoor coil.
(C) Low Temperature Heating 17°F DB, 15°F WB air entering outdoor coil, 70°F DB air entering indoor coil.
(D) Rated indoor airflow for heating is the same as for cooling.

AHRI STANDARD 270 RATING CONDITIONS — (Noise rating numbers are determined with the unit in cooling operation.) Standard Noise Rating number is at 95°F outdoor air.

AHRI CERTIFIED™ www.ahridirectory.org
Unitary Small HP
AHRI Standard 210/240
Certification applies only when the complete system is listed with AHRI.

C ETL LISTED US
Intertek

American Standard
HEATING & AIR CONDITIONING

Model Nomenclature

Outdoor Units

4 A 6 H 3 0 3 6 C 1 0 0 0 A A

Refrigerant Type
4 = R-410A

AMERICAN STANDARD

Product Type
6 = Split Heat Pump
7 = Split Cooling

Product Family
A = Allegiance
H = Heritage
B = Basic
C = Light Commercial

Family SEER
0 = 10 3 = 13 6 = 16
1 = 11 4 = 14 8 = 18
2 = 12 5 = 15 9 = 19

Split System Connections 1-6 Tons
0 = Brazed

Nominal Capacity in 000s of BTUs

Major Design Modifications

Power Supply
1 = 200-230/1/60 or 208-230/1/60
3 = 200-230/3/60
4 = 460/3/60

Secondary Function

Minor Design Modifications

Unit Parts Identifier

Air Handler

1 2 3 4 5 6 7 8 9 10 11 12 13 14 15
G A M 2 A 0 A 3 6 S 3 1 S A A

Brand
A,T = Better
G = Good

Product Type
A = Air Handler

Convertability
M= Multi-poise 4-way
F = Upflow Front Return, 3-way
T = 3-way

Product Tier
2 = Good, Entry Level Feature Set
4 = Better, Retail Replacement Mid Effy.
5 = Better, Entry Level High Effy., Multi-Speed
7 = Best, Retail Replacement High Effy., Variable-Speed
8 = Best, Retail Ultimate High Effy., Variable-Speed

Major Design Change

No Descriptor
0 = Air Handler / Coil

Size (Footprint)
A = 17.5 x 21.5
B = 21.0 x 21.5
C = 23.5 x 21.5

Cooling Size: Air Handler or Coil
0-9 = AH Coil - 1000 BTU's (18, 24, 30, 36, 42, 48, 60)

Airflow Type & Capability
S = Low Effy PSC, 1-5 - nom. Tonnage (cfm/ton)
M = Mid Effy Multi-Speed, 1-5 - nom. Tonnage (cfm/ton)
H = High Effy Multi-Speed, 1-5 - nom. Tonnage (cfm/ton)
V = High Effy Variable, 1-5 - nom. Tonnage (cfm/ton)

Power Supply
1 = 208-230/1/60

System Control Type
S = Standard - 24 VAC
C = CLII 13.8 VDC

Minor Design Change

Unit Parts Identifier

Gas Furnaces

1 2 3 4 5 6 7 8 9 10 11 12 13 14 15
A U D 1 B 0 8 0 A 9 H 3 1 A A

Furnace Configuration
AU = Upflow/Horizontal
AD = Downflow/Horizontal

Type
E = 80% Induced Draft Standard
D = 80% Induced Draft Premium
C = 90% Condensing Standard
X = 90% Condensing Premium
H = 95% Condensing Premium

Number of Heating Stages
1 = Single Stage
2 = Two Stage
3 = Three Stage
M = Modulating

Cabinet Width
A = 14.5" Cabinet Width
B = 17.5" Cabinet Width
C = 21.0" Cabinet Width
D = 24.5" Cabinet Width

Heating Input in 1000's (BTUH)
080 = 80,000 BTUH

Major Design Change

Voltage
9 = 115 Volts / 60 Hertz / Natural Gas
A = 115 Volts / 50 Hertz / Natural Gas
C = 115 Volts / Natural Gas with Communicating System Control
F = 115 Volts / Natural Gas with Integrated Electronic Filter
D = 115 Volts / Natural Gas with Communicating System Control and Integrated Electronic Filter

Air Capacity for Cooling

Standard PSC	Variable Speed	High Efficiency
24 = 2 Tons	V3 = 3 Tons	H3 = 3 Tons
36 = 3 Tons	V4 = 4 Tons	H4 = 4 Tons
42 = 3.5 Tons	V5 = 5 Tons	H5 = 5 Tons
45 = 4 Tons		
48 = 4 Tons		
54 = 5 Tons		
60 = 5 Tons		
72 = 6 Tons		

Draft Inducer Speeds
1 = Single Speed
2 = Two Speed
V = Variable Speed

Minor Design Change

Service Digit - Not Orderable

Heat Pump/ Cooling Coils

1 2 3 4 5 6 7 8 9 10 11 12 13 14 15
4 T X C B 0 3 6 A C 3 H C A A

Refrigerant Type
4 = R-410A

Series
T = Premium (Heat Pump or Convertible Coil)
C = Standard (Cooling Only)

Coil Design
X = Direct Expansion Evaporator Coil

Coil Feature
C = Cased A Coil
A = Uncased A Coil
F = Cased Horizontal Flat Coil

Coil Width (Cased/Uncased)
A = 14.5" /13.3"
B = 17.5" / 16.3"
C = 21.0" / 19.8"
D = 24.5" / 23.3"
H = 10.5"

Refrigerant Line Coupling
0 = Brazed

Nominal Capacity in 1000's (BTUH)

Major Design Change

Efficiency
C = Standard
S = Hi Efficiency (derived from 10 SEER products)

Refrigerant Control
3 = TXV - Non-Bleed

Coil Circuitry
H = Heat Pump
C = Cooling

Airflow Configuration
A = Upflow Only
U = Upflow / Downflow
H = Horizontal Only
C = Convertible - Upflow, Downflow, Left or Right Airflow

Minor Design Change

Service Digit - Not Orderable

Electrical Data

SCHEMATIC DIAGRAMS

4A6H3018D, 024D, 036C

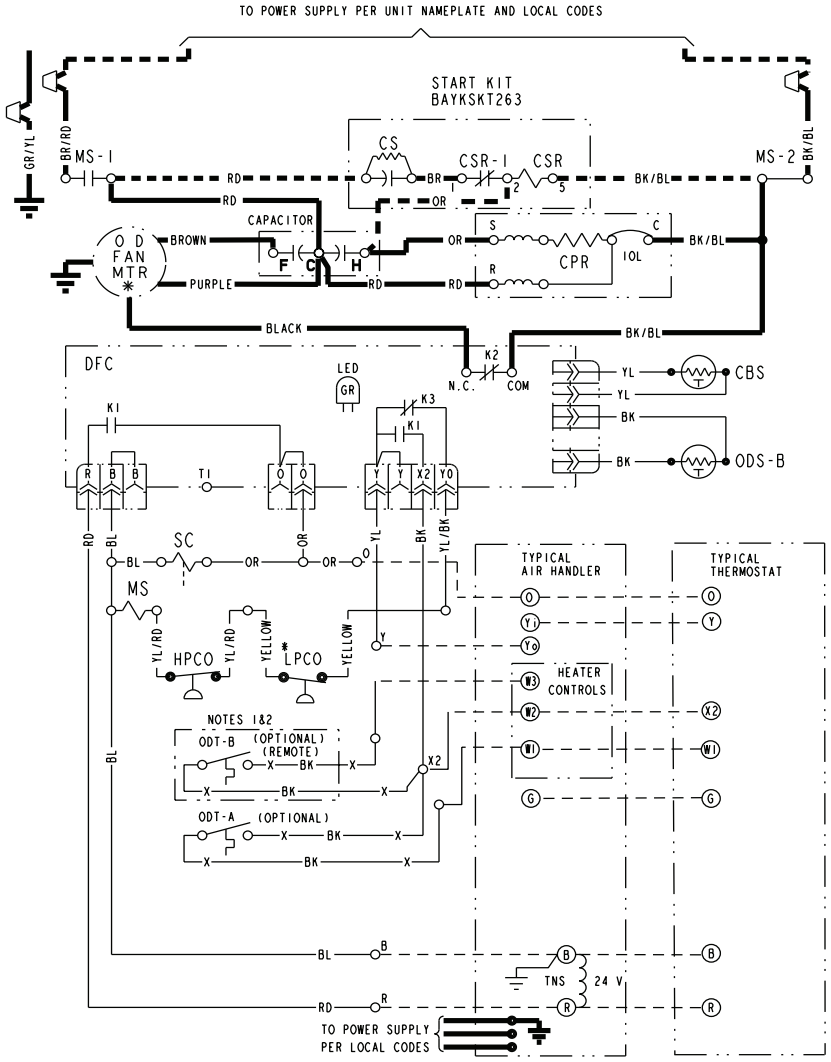

CA	COOLING ANTICIPATOR	LPCO	LOW PRESSURE CUTOUT SW.
CBS	COIL BOTTOM SENSOR	MS	COMPRESSOR MOTOR CONTACTOR
CF	FAN CAPACITOR	ODA	OUTDOOR ANTICIPATOR
CN	WIRE CONNECTOR	OFT	OUTDOOR FAN THERMOSTAT
CPR	COMPRESSOR	ODS	OUTDOOR TEMPERATURE SENSOR
CR	RUN CAPACITOR	ODT	OUTDOOR THERMOSTAT
CS	STARTING CAPACITOR	RHS	RESISTANCE HEAT SWITCH
CSR	CAPACITOR SWITCHING RELAY	SC	SWITCHOVER VALVE SOLENOID
DFC	DEFROST CONTROL	SM	SYSTEM "ON-OFF" SWITCH
F	INDOOR FAN RELAY	TDL	DISCHARGE LINE THERMOSTAT
HA	HEATING ANTICIPATOR	TNS	TRANSFORMER
HPCO	HIGH PRESSURE CUTOUT SW.	TS	HEATING-COOLING THERMOSTAT
IOL	INTERNAL OVERLOAD PROTECTOR	TSH	HEATING THERMOSTAT

⚠ WARNING	⚠ CAUTION
HAZARDOUS VOLTAGE! DISCONNECT ALL ELECTRIC POWER INCLUDING REMOTE DISCONNECTS BEFORE SERVICING. FAILURE TO DISCONNECT POWER BEFORE SERVICING CAN CAUSE SEVERE PERSONAL INJURY OR DEATH!	USE COPPER CONDUCTORS ONLY! UNIT TERMINALS ARE NOT DESIGNED TO ACCEPT OTHER TYPES OF CONDUCTORS. FAILURE TO DO SO MAY CAUSE DAMAGE TO THE EQUIPMENT!

COLOR OF WIRE
BK/BL — BLACK WIRE WITH BLUE MARKER
COLOR OF MARKER

BK	BLACK	OR	ORANGE	YL	YELLOW
BL	BLUE	RD	RED	GR	GREEN
BR	BROWN	WH	WHITE	PR	PURPLE

NOTES:

1. IF ODT-B IS NOT USED, ADD JUMPER BETWEEN W2 & W3 AT AIR HANDLER.
   IF USED, ODT-B MUST BE MOUNTED REMOTE OF CONTROL BOX IN AN APPROVED WEATHER PROOF ENCLOSURE.
2. IF ODT-A IS NOT USED, ADD JUMPER BETWEEN W1 & W2 AT AIR HANDLER.
3. LOW VOLTAGE (24 V.) FIELD WIRING MUST BE 18 AWG MIN.

FOR CANADIAN INSTALLATIONS
POUR INSTALLATIONS CANADIENNES

CAUTION: NOT SUITABLE FOR USE ON SYSTEMS EXCEEDING 150V-TO-GROUND.
ATTENTION: NE CONVIENT PAS AUX INSTALLATIONS DE PLUS DE 150 V A LA TERRE.

PRINTED FROM D157740P03

American Standard
HEATING & AIR CONDITIONING

Electrical Data

SCHEMATIC DIAGRAMS

(SEE LEGEND)

4A6H3030C1

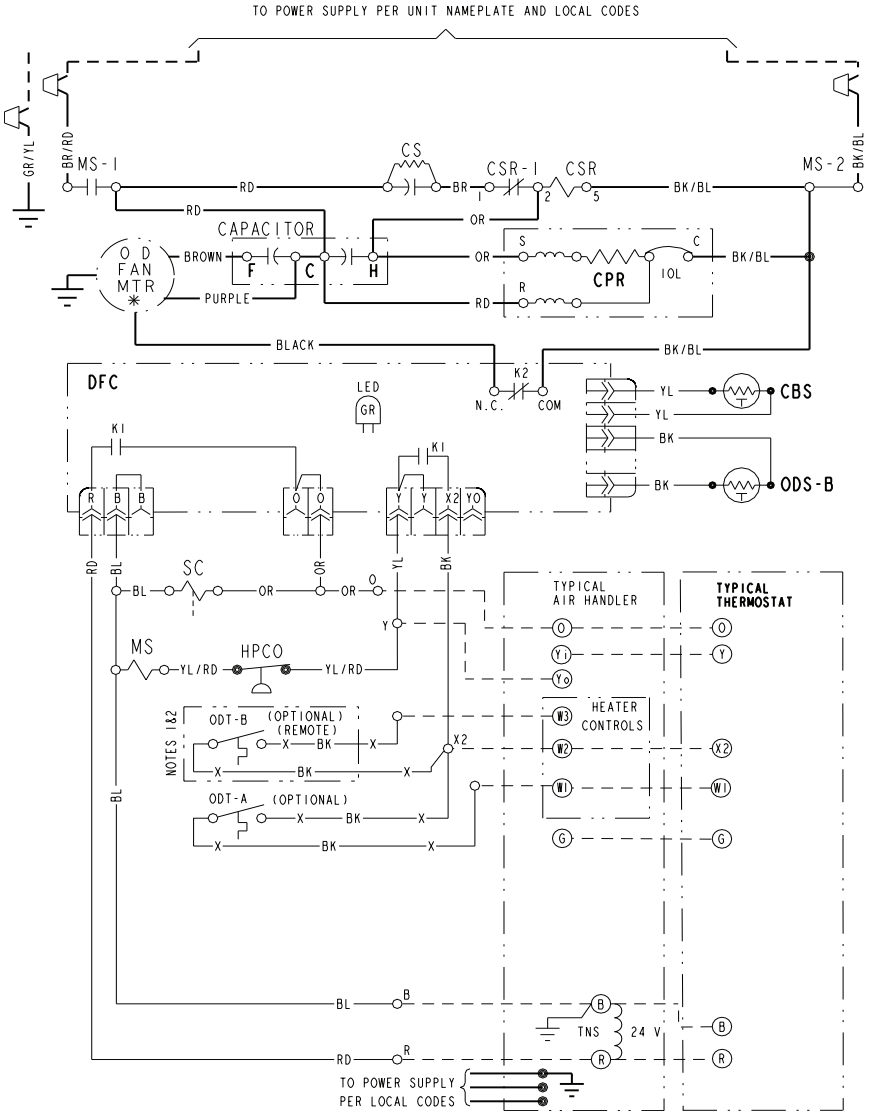

CA COOLING ANTICIPATOR
CBS COIL BOTTOM SENSOR
CF FAN CAPACITOR
CN WIRE CONNECTOR
CPR COMPRESSOR
CR RUN CAPACITOR
CS STARTING CAPACITOR
CSR CAPACITOR SWITCHING RELAY
DFC DEFROST CONTROL
F INDOOR FAN RELAY
HA HEATING ANTICIPATOR
HPCO HIGH PRESSURE CUTOUT SW.
IOL INTERNAL OVERLOAD PROTECTOR
LPCO LOW PRESSURE CUTOUT SW.
MS COMPRESSOR MOTOR CONTACTOR
ODA OUTDOOR ANTICIPATOR
OFT OUTDOOR FAN THERMOSTAT
ODS OUTDOOR TEMPERATURE SENSOR
ODT OUTDOOR THERMOSTAT
RHS RESISTANCE HEAT SWITCH
SC SWITCHOVER VALVE SOLENOID
SM SYSTEM "ON-OFF" SWITCH
TDL DISCHARGE LINE THERMOSTAT
TNS TRANSFORMER
TS HEATING-COOLING THERMOSTAT
TSH HEATING THERMOSTAT

COLOR OF WIRE
BK/BL BLACK WIRE WITH BLUE MARKER
COLOR OF MARKER

BK	BLACK	OR	ORANGE	YL	YELLOW
BL	BLUE	RD	RED	GR	GREEN
BR	BROWN	WH	WHITE	PR	PURPLE

⚠ WARNING	⚠ CAUTION
HAZARDOUS VOLTAGE!	USE COPPER CONDUCTORS ONLY!
DISCONNECT ALL ELECTRIC POWER INCLUDING REMOTE DISCONNECTS BEFORE SERVICING.	UNIT TERMINALS ARE NOT DESIGNED TO ACCEPT OTHER TYPES OF CONDUCTORS.
FAILURE TO DISCONNECT POWER BEFORE SERVICING CAN CAUSE SEVERE PERSONAL INJURY OR DEATH!	FAILURE TO DO SO MAY CAUSE DAMAGE TO THE EQUIPMENT!

NOTES:

1. IF ODT-B IS NOT USED, ADD JUMPER BETWEEN W2 & W3 AT AIR HANDLER.
   IF USED, ODT-B MUST BE MOUNTED REMOTE OF CONTROL BOX IN AN APPROVED WEATHER PROOF ENCLOSURE.
2. IF ODT-A IS NOT USED, ADD JUMPER BETWEEN W1 & W2 AT AIR HANDLER.
3. LOW VOLTAGE (24 V.) FIELD WIRING MUST BE 18 AWG MIN.

FOR CANADIAN INSTALLATIONS
POUR INSTALLATIONS CANADIENNES

CAUTION: NOT SUITABLE FOR USE ON SYSTEMS EXCEEDING 150V-TO-GROUND.
ATTENTION: NE CONVIENT PAS AUX INSTALLATIONS DE PLUS DE 150 V A LA TERRE.

PRINTED FROM D157099P01

Electrical Data

SCHEMATIC DIAGRAMS

4A6H3042B

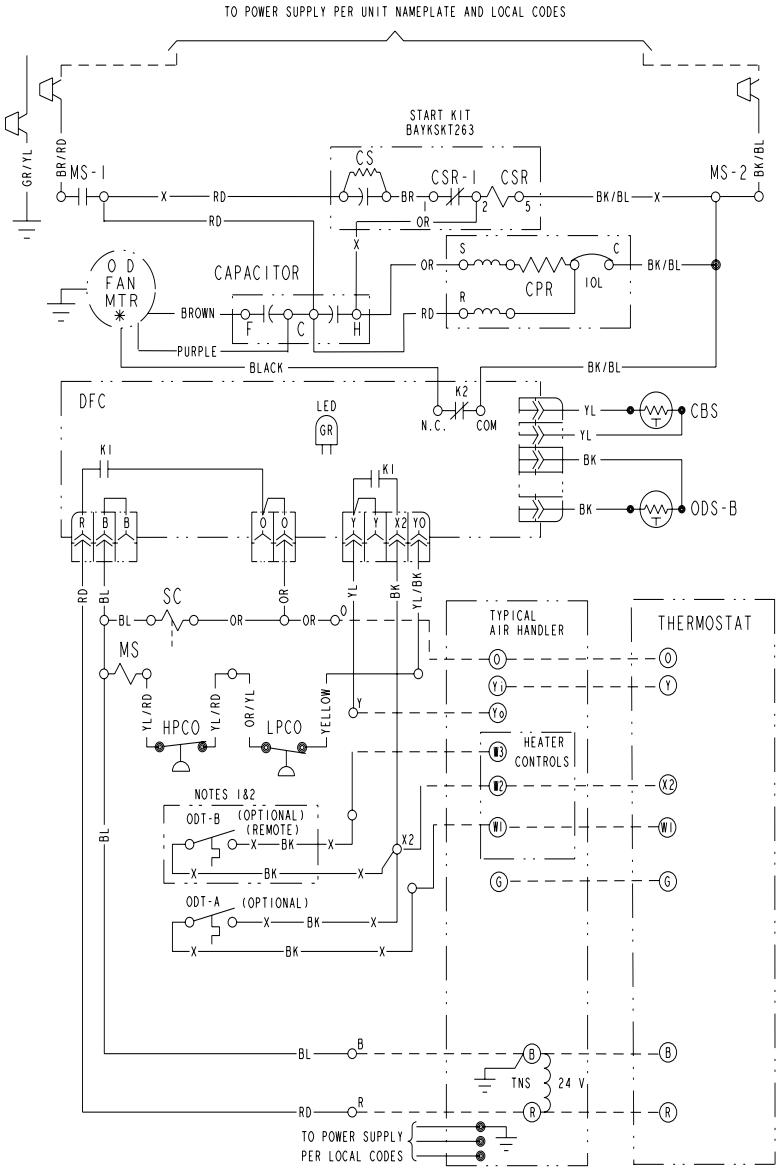

CA	COOLING ANTICIPATOR	LPCO	LOW PRESSURE CUTOUT SW.
CBS	COIL BOTTOM SENSOR	MS	COMPRESSOR MOTOR CONTACTOR
CF	FAN CAPACITOR	ODA	OUTDOOR ANTICIPATOR
CN	WIRE CONNECTOR	OFT	OUTDOOR FAN THERMOSTAT
CPR	COMPRESSOR	ODS	OUTDOOR TEMPERATURE SENSOR
CR	RUN CAPACITOR	ODT	OUTDOOR THERMOSTAT
CS	STARTING CAPACITOR	RHS	RESISTANCE HEAT SWITCH
CSR	CAPACITOR SWITCHING RELAY	SC	SWITCHOVER VALVE SOLENOID
DFC	DEFROST CONTROL	SM	SYSTEM "ON-OFF" SWITCH
F	INDOOR FAN RELAY	TDL	DISCHARGE LINE THERMOSTAT
HA	HEATING ANTICIPATOR	TNS	TRANSFORMER
HPCO	HIGH PRESSURE CUTOUT SW.	TS	HEATING-COOLING THERMOSTAT
IOL	INTERNAL OVERLOAD PROTECTOR	TSH	HEATING THERMOSTAT

⚠ WARNING	⚠ CAUTION
HAZARDOUS VOLTAGE! DISCONNECT ALL ELECTRIC POWER INCLUDING REMOTE DISCONNECTS BEFORE SERVICING. FAILURE TO DISCONNECT POWER BEFORE SERVICING CAN CAUSE SEVERE PERSONAL INJURY OR DEATH!	USE COPPER CONDUCTORS ONLY! UNIT TERMINALS ARE NOT DESIGNED TO ACCEPT OTHER TYPES OF CONDUCTORS. FAILURE TO DO SO MAY CAUSE DAMAGE TO THE EQUIPMENT!

COLOR OF WIRE
BK/BL BLACK WIRE WITH BLUE MARKER
COLOR OF MARKER

BK	BLACK	OR	ORANGE	YL	YELLOW
BL	BLUE	RD	RED	GR	GREEN
BR	BROWN	WH	WHITE	PR	PURPLE

NOTES:

1. IF ODT-B IS NOT USED, ADD JUMPER BETWEEN W2 & W3 AT AIR HANDLER.
   IF USED, ODT-B MUST BE MOUNTED REMOTE OF CONTROL BOX IN AN APPROVED WEATHER PROOF ENCLOSURE.
2. IF ODT-A IS NOT USED, ADD JUMPER BETWEEN W1 & W2 AT AIR HANDLER.
3. LOW VOLTAGE (24 V.) FIELD WIRING MUST BE 18 AWG MIN.

FOR CANADIAN INSTALLATIONS
POUR INSTALLATIONS CANADIENNES

CAUTION: NOT SUITABLE FOR USE ON SYSTEMS EXCEEDING 150V-TO-GROUND.
ATTENTION: NE CONVIENT PAS AUX INSTALLATIONS DE PLUS DE 150 V A LA TERRE.

PRINTED FROM D157061P01

American Standard
HEATING & AIR CONDITIONING

Electrical Data

SCHEMATIC DIAGRAMS

4A6H3048-060B

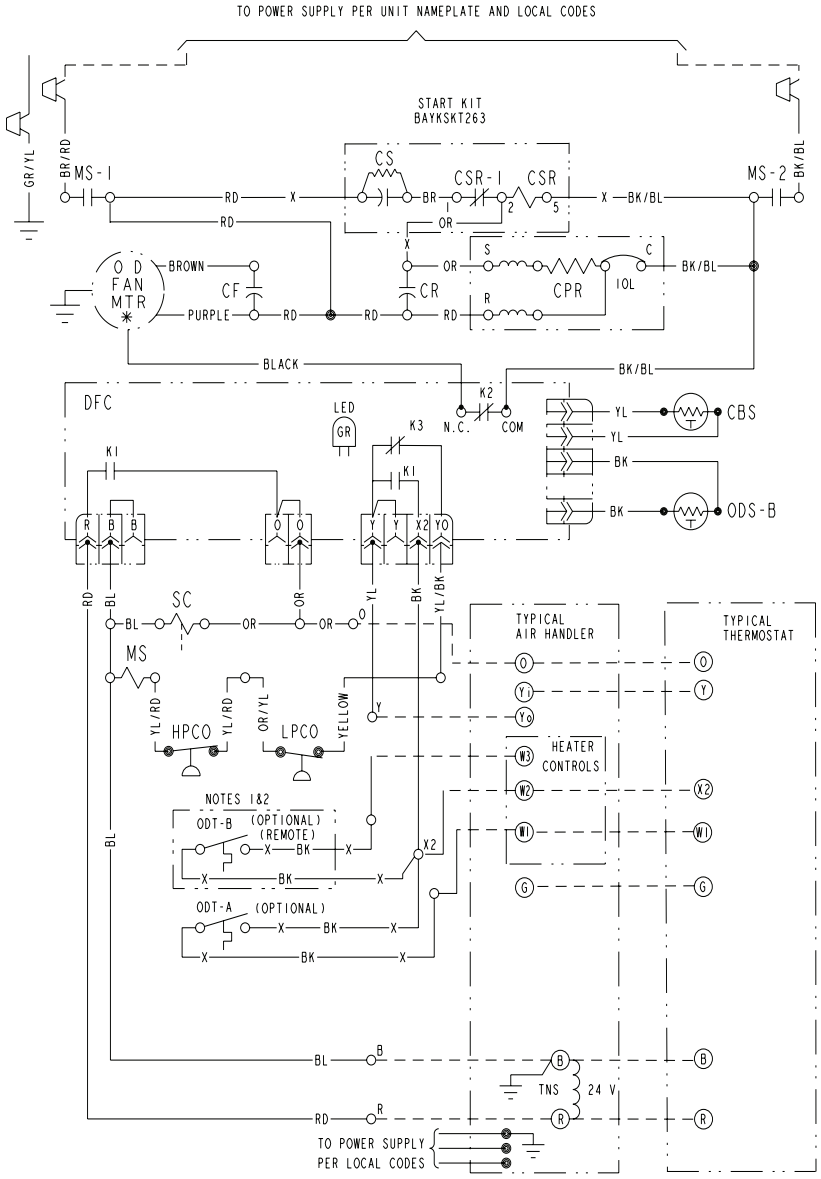

CA	COOLING ANTICIPATOR	LPCO	LOW PRESSURE CUTOUT SW.
CBS	COIL BOTTOM SENSOR	MS	COMPRESSOR MOTOR CONTACTOR
CF	FAN CAPACITOR	ODA	OUTDOOR ANTICIPATOR
CN	WIRE CONNECTOR	OFT	OUTDOOR FAN THERMOSTAT
CPR	COMPRESSOR	ODS	OUTDOOR TEMPERATURE SENSOR
CR	RUN CAPACITOR	ODT	OUTDOOR THERMOSTAT
CS	STARTING CAPACITOR	RHS	RESISTANCE HEAT SWITCH
CSR	CAPACITOR SWITCHING RELAY	SC	SWITCHOVER VALVE SOLENOID
DFC	DEFROST CONTROL	SM	SYSTEM "ON-OFF" SWITCH
F	INDOOR FAN RELAY	TDL	DISCHARGE LINE THERMOSTAT
HA	HEATING ANTICIPATOR	TNS	TRANSFORMER
HPCO	HIGH PRESSURE CUTOUT SW.	TS	HEATING-COOLING THERMOSTAT
IOL	INTERNAL OVERLOAD PROTECTOR	TSH	HEATING THERMOSTAT

⚠ WARNING	⚠ CAUTION
HAZARDOUS VOLTAGE!	USE COPPER CONDUCTORS ONLY!
DISCONNECT ALL ELECTRIC POWER INCLUDING REMOTE DISCONNECTS BEFORE SERVICING.	UNIT TERMINALS ARE NOT DESIGNED TO ACCEPT OTHER TYPES OF CONDUCTORS.
FAILURE TO DISCONNECT POWER BEFORE SERVICING CAN CAUSE SEVERE PERSONAL INJURY OR DEATH!	FAILURE TO DO SO MAY CAUSE DAMAGE TO THE EQUIPMENT!

COLOR OF WIRE
BK/BL BLACK WIRE WITH BLUE MARKER
COLOR OF MARKER

BK	BLACK	OR	ORANGE	YL	YELLOW
BL	BLUE	RD	RED	GR	GREEN
BR	BROWN	WH	WHITE	PR	PURPLE

NOTES:
1. IF ODT-B IS NOT USED, ADD JUMPER BETWEEN W2 & W3 AT AIR HANDLER.
   IF USED, ODT-B MUST BE MOUNTED REMOTE OF CONTROL BOX IN AN APPROVED WEATHER PROOF ENCLOSURE.
2. IF ODT-A IS NOT USED, ADD JUMPER BETWEEN W1 & W2 AT AIR HANDLER.
3. LOW VOLTAGE (24 V.) FIELD WIRING MUST BE 18 AWG MIN.

FOR CANADIAN INSTALLATIONS
POUR INSTALLATIONS CANADIENNES

CAUTION: NOT SUITABLE FOR USE ON SYSTEMS EXCEEDING 150V-TO-GROUND.
ATTENTION: NE CONVIENT PAS AUX INSTALLATIONS DE PLUS DE 150 V A LA TERRE.

PRINTED FROM D157059P01

Dimensions

4A6H3 OUTLINE DRAWING

NOTE: ALL DIMENSIONS ARE IN MM (INCHES)

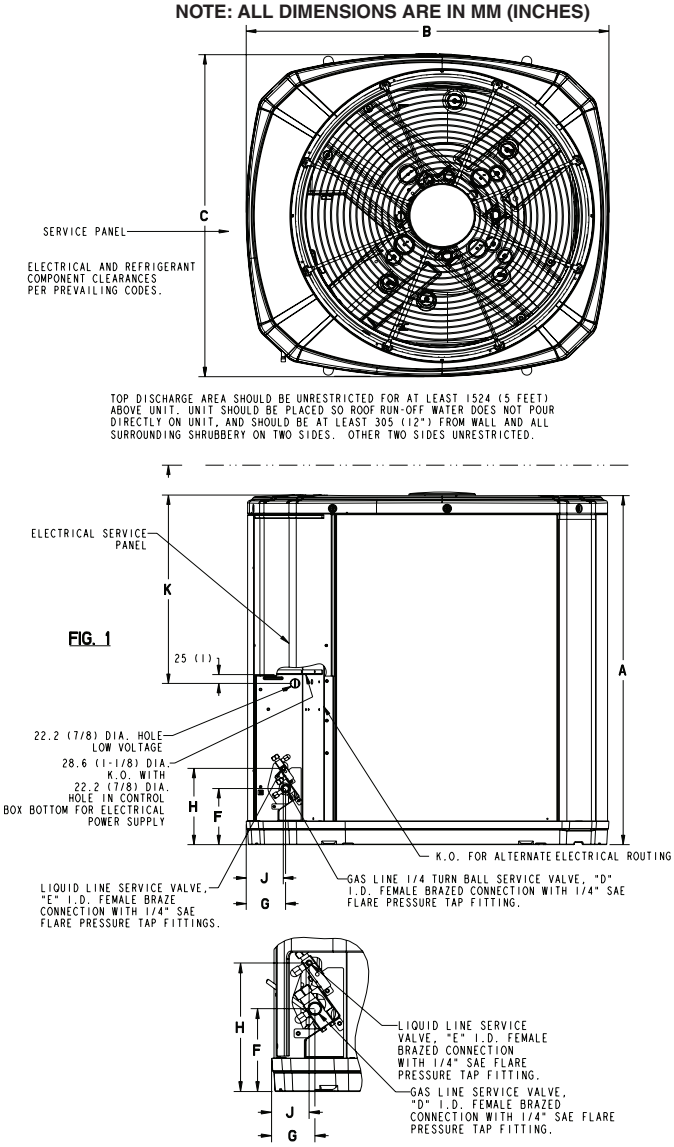

FIG. 2

MODELS	BASE	FIG.	A	B	C	D	E	F	G	H	J	K
4A6H3018D	3	1	730 (28-3/4)	829 (32-5/8)	756 (29-3/4)	5/8	3/8	143 (5-5/8)	92 (3-5/8)	210 (8-1/4)	79 (3-1/8)	508 (20)
4A6H3024D	3	1	730 (28-3/4)	829 (32-5/8)	756 (29-3/4)	5/8	3/8	143 (5-5/8)	92 (3-5/8)	210 (8-1/4)	79 (3-1/8)	508 (20)
4A6H3030C	3	1	832 (32-3/4)	829 (32-5/8)	756 (29-3/4)	3/4	3/8	143 (5-5/8)	92 (3-5/8)	210 (8-1/4)	79 (3-1/8)	508 (20)
4A6H3036C	4	1	841 (33-1/8)	946 (37-1/4)	870 (34-1/4)	3/4	3/8	152 (6)	98 (3-7/8)	219 (8-5/8)	86 (3-3/8)	508 (20)
4A6H3042B	4	1	841 (33-1/8)	946 (37-1/4)	870 (34-1/4)	3/4	3/8	152 (6)	98 (3-7/8)	219 (8-5/8)	86 (3-3/8)	508 (20)
4A6H3048B	4	1	943 (37-1/8)	946 (37-1/4)	870 (34-1/4)	7/8	3/8	152 (6)	98 (3-7/8)	219 (8-5/8)	86 (3-3/8)	508 (20)
4A6H3060B	4	1	1045 (41-1/8)	946 (37-1/4)	870 (34-1/4)	7/8	3/8	152 (6)	98 (3-7/8)	219 (8-5/8)	86 (3-3/8)	508 (20)

American Standard
HEATING & AIR CONDITIONING

Mechanical Specification Options

General
The 4A6H3 models shall be fully charged from the factory for matched indoor section and up to 15 feet of piping. This unit must be designed to operate at outdoor ambient temperatures as high as 115°F. Cooling capacities shall be matched with a wide selection of air handlers and furnace coils that are AHRI certified. The unit is certified to UL 1995. Exterior must be designed for outdoor application.

Casing
Unit casing is constructed of heavy gauge, galvanized steel and painted with a weather-resistant powder paint. Corrosion and weatherproof CMBP-G30 base.

Refrigerant Controls
Refrigeration system controls include condenser fan and compressor contactor. High and low pressure controls are inherent to the compressor. Another standard feature is the liquid line dryer.

Compressor
The compressor features internal over temperature and pressure protector, total dipped hermetic motor and thermostatically controlled sump heater. Other features include: Centrifugal oil pump, and low vibration and noise.

Condenser Coil
The Spine Fin™ coil shall be continuously wrapped, corrosion resistant all aluminum with minimum brazed joints. This coil is 3/8 inch O.D. seamless aluminum glued to a continuous aluminum fin. Coils are lab tested to withstand 2,000 pounds of pressure per square inch. The outdoor coil provides low airflow resistance and efficient heat transfer. The coil is protected on all four sides by louvered panels.

Low Ambient Cooling
As manufactured, this unit has a cooling capability to 55°F. The addition of an evaporator defrost control permits operation to 30°F. The addition of a low ambient kit with TXV permits low ambient cooling to 0°F.

Accessories
Thermostats — Heating/Cooling (manual and automatic changeover). Sub-base to match thermostat and locking thermostat cover.

Evaporator Defrost Control — See Low Ambient Cooling.

Outdoor Thermostat — Supplemental heat outdoor ambient lockout from 46 to –10°F.

AHRI CERTIFIED™ www.ahridirectory.org
Unitary Small HP
AHRI Standard 210/240
Certification applies only when the complete system is listed with AHRI.

C ETL LISTED US
Intertek

American Standard
HEATING & AIR CONDITIONING

05/13

American Standard Heating & Air Conditioning
www.americanstandardair.com

American Standard Heating & Air Conditioning *has a policy of continuous product and product data improvement* ***and*** *it reserves the right to change design and specifications without notice.*