# INSTALLATION INSTRUCTIONS FOR *M9S80*U ULTRA LOW NOx GAS FURNACE

CATEGORY I CATÉGORIE I

These furnaces comply with requirements embodied in the American National Standard/National Standard of Canada ANSI Z21.47·CSA-2.3 Gas Fired Central Furnaces.

*Installer: Affix all manuals adjacent to the unit.*

## ATTENTION INSTALLING PERSONNEL

As a professional installer, you have an obligation to know the product better than the customer. This includes all safety precautions and related items.

Prior to actual installation, thoroughly familiarize yourself with this Instruction Manual. Pay special attention to all safety warnings. Often during installation or repair, it is possible to place yourself in a position which is more hazardous than when the unit is in operation.

Remember, it is **your** responsibility to install the product safely and to know it well enough to be able to instruct a customer in its safe use.

Safety is a matter of common sense...a matter of thinking before acting. Most dealers have a list of specific, good safety practices...follow them.

The precautions listed in this Installation Manual are intended as supplemental to existing practices. However, if there is a direct conflict between existing practices and the content of this manual, the precautions listed here take precedence.

**RECOGNIZE THIS SYMBOL AS A SAFETY PRECAUTION**

**NOTE**: Please contact your distributor or our website listed below for the applicable Specification Sheet referred to in this manual.

80% HEX

DO NOT LIFT PRODUCT USING HEAT EXCHANGER

TABLE OF CONTENTS



**WARNING**

**Only personnel that have been trained to install, adjust, service or repair (hereinafter, "service") the equipment specified in this manual should service the equipment. The manufacturer will not be responsible for any injury or property damage arising from improper service or service procedures. If you service this unit, you assume responsibility for any injury or property damage which may result. In addition, in jurisdictions that require one or more licenses to service the equipment specified in this manual, only licensed personnel should service the equipment. Improper installation, adjustment, servicing or repair of the equipment specified in this manual, or attempting to install, adjust, service or repair the equipment specified in this manual without proper training may result in product damage, property damage, personal injury or death.**

**WARNING**

**DO NOT BYPASS SAFETY DEVICES**

IOG-2031
09/2021

19001 Kermier Rd. Waller, Tx 77484
*www.goodmanmfg.com • www.amana-hac.com*

## *Safety Considerations*

**IMPORTANT NOTE:** This unit is designed to meet the NOX requirement of 14Ng/J maximum as required by the South Coast Air Quality Management District and the San Joaquin Valley Air Pollution Control District, both in the State of California, and is intended for installation in those districts only.

This unit has a Control System that compensates for certain installation and environmental conditions. This unit must:

- Be properly installed, operated, and maintained per the instructions.
- Be serviced only by properly trained Service Technicians.

This unit is not approved for use with gasses other than Natural Gas.

Units that are not installed, maintained, or operated properly may result in “noisy” operation during the Heating Cycle. If this unit is making unusual or objectionable noises during the Heating Cycle, turn the heat off at the thermostat and contact a qualified Service organization right away.

Adhere to the following warnings and cautions when installing, adjusting, altering, servicing, or operating the furnace. To ensure proper installation and operation, thoroughly read this manual for specifics pertaining to the installation and application of this product.

This furnace is manufactured for use with natural gas only.

Install this furnace only in a location and position as specified in **LOCATION REQUIREMENTS & CONSIDERATIONS section and INSTALLATION POSITIONS section** of this manual.

Provide adequate combustion and ventilation air to the furnace as specified in **COMBUSTION & VENTILATION AIR REQUIREMENTS section of this manual.**

Combustion products must be discharged to the outdoors. Connect this furnace to an approved vent system only, as specified in **CATEGORY 1 VENTING** section of this manual.

Never test for gas leaks with an open flame. Use a commercially available soap solution made specifically for the detection of leaks to check all connections, as specified in **GAS SUPPLY AND PIPING** section of this manual.

Always install a furnace to operate within the furnace's intended temperature-rise range with a duct system which has external static pressure within the allowable range, as specified on the furnace rating plate and **OPERATIONAL CHECKS section** of these instructions.

When a furnace is installed so that supply ducts carry air circulated by the furnace to areas outside the space containing the furnace, the return air shall also be handled by duct(s) sealed to the furnace casing and terminating outside the space containing the furnace.

A gas-fired furnace for installation in a residential garage must be installed as specified in the **LOCATION REQUIREMENTS AND CONSIDERATIONS section** of this manual.

This furnace may be used as a construction site heater only if certain conditions are met. These conditions are listed in the **PRODUCT APPLICATION section** of this manual.

**WARNING**

**TO PREVENT PERSONAL INJURY OR DEATH DUE TO IMPROPER INSTALLATION, ADJUSTMENT, ALTERATION, SERVICE OR MAINTENANCE, REFER TO THIS MANUAL. FOR ADDITIONAL ASSISTANCE OR INFORMATION, CONSULT A QUALIFIED INSTALLER, SERVICER AGENCY OR THE GAS SUPPLIER.**

**WARNING**

**FIRE OR EXPLOSION HAZARD**

Failure to follow the safety warnings exactly could result in serious injury, death or property damage.

Never test for gas leaks with an open flame.
Use a commercially available soap solution made specifically for the detection of leaks to check all connections. A fire or explosion may result causing property damage, personal injury or loss of life.

**AVERTISSEMENT**

**RISQUE D'INCENDIE OU D'EXPLOSION**

Si les consignes de sécurité ne sont pas suivies à la lettre, cela peut entraîner la mort, de graves blessures ou des dommages matériels.

Ne jamais vérifier la présence de fuites de gaz au moyen d'une flamme nue. Vérifier tous les raccords en utilisant une solution savonneuse commerciale conçue spécialement pour la détection de fuites. Un incendie ou une explosion risque de se produire, ce qui peut entraîner la mort, des blessures ou des dommages matériels.

**WARNING**

**IF THE INFORMATION IN THESE INSTRUCTIONS IS NOT FOLLOWED EXACTLY, A FIRE OR EXPLOSION MAY RESULT CAUSING PROPERTY DAMAGE, PERSONAL INJURY OR LOSS OF LIFE.**

— DO NOT STORE OR USE GASOLINE OR OTHER FLAMMABLE VAPORS AND LIQUIDS IN THE VICINITY OF THIS OR ANY OTHER APPLIANCE.

— **WHAT TO DO IF YOU SMELL GAS:**

- DO NOT TRY TO LIGHT ANY APPLIANCE.
- DO NOT TOUCH ANY ELECTRICAL SWITCH; DO NOT USE ANY PHONE IN YOUR BUILDING.
- IMMEDIATELY CALL YOUR GAS SUPPLIER FROM A NEIGHBOR'S PHONE. FOLLOW THE GAS SUPPLIER'S INSTRUCTIONS.
- IF YOU CANNOT REACH YOUR GAS SUPPLIER, CALL THE FIRE DEPARTMENT.

— INSTALLATION AND SERVICE MUST BE PERFORMED BY A QUALIFIED INSTALLER, SERVICE AGENCY OR THE GAS SUPPLIER.

**WARNING**

**HEATING UNIT SHOULD NOT BE UTILIZED WITHOUT REASONABLE, ROUTINE, INSPECTION, MAINTENANCE AND SUPERVISION. IF THE BUILDING IN WHICH ANY SUCH DEVICE IS LOCATED WILL BE VACANT, CARE SHOULD BE TAKEN THAT SUCH DEVICE IS ROUTINELY INSPECTED, MAINTAINED AND MONITORED. IN THE EVENT THAT THE BUILDING MAYBE EXPOSED TO FREEZING TEMPERATURES AND WILL BE VACANT, ALL WATER-BEARING PIPES SHOULD BE DRAINED, THE BUILDING SHOULD BE PROPERLY WINTERIZED, AND THE WATER SOURCE CLOSED. IN THE EVENT THAT THE BUILDING MAY BE EXPOSED TO FREEZING TEMPERATURES AND WILL BE VACANT, ANY HYDRONIC COIL UNITS SHOULD BE DRAINED AS WELL AND, IN SUCH CASE, ALTERNATIVE HEAT SOURCES SHOULD BE UTILIZED.**

**WARNING**

**SHOULD OVERHEATING OCCUR OR THE GAS SUPPLY FAIL TO SHUT OFF, TURN OFF THE MANUAL GAS SHUTOFF VALVE EXTERNAL TO THE FURNACE BEFORE TURNING OFF THE ELECTRICAL SUPPLY.**

**WARNING**

**POSSIBLE PROPERTY DAMAGE, PERSONAL INJURY OR DEATH DUE TO FIRE, EXPLOSION, SMOKE, SOOT, CONDENSATION, ELECTRICAL SHOCK OR CARBON MONOXIDE MAY RESULT FROM IMPROPER INSTALLATION, REPAIR OPERATION, OR MAINTENANCE OF THIS PRODUCT.**

**WARNING**

**TO PREVENT PERSONAL INJURY OR DEATH DUE TO ASPHYXIATION, THIS FURNACE MUST BE CATEGORY I VENTED. DO NOT VENT USING CATEGORY III VENTING.**
**PROVISIONS MUST BE MADE FOR VENTING COMBUSTION PRODUCTS OUTDOORS THROUGH A PROPER VENTING SYSTEM. THE LENGTH OF FLUE PIPE COULD BE A LIMITING FACTOR IN LOCATING THE FURNACE.**

## WARNING

**CARBON MONOXIDE POISONING HAZARD**

Failure To Follow The Steps Outlined Below For Each Appliance Connected To The Venting System Being Placed Into Operation Could Result In Carbon Monoxide Poisoning Or Death. The Following Steps Shall Be Followed For Each Appliance Connected To The Venting System Being Placed Into Operation, While All Other Appliances Connected To The Venting System Are Not In Operation:

1) Seal Any Unused Openings In The Venting System.
2) Inspect The Venting System For Proper Size And Horizontal Pitch, As Required In The National Fuel Gas Code, Ansi Z223.1/nfpa 54 Or The Natural Gas And Propane Installation Code, Csa B149.1 And These Instructions. Determine That There Is No Blockage Or Restriction, Leakage, Corrosion And Other Deficiencies Which Could Cause An Unsafe Condition.
3) As Far As Practical, Close All Building Doors And Windows And All Doors Between The Space In Which The Appliance(s) Connected To The Venting System Are Located And Other Spaces Of The Building.
4) Close Fireplace Dampers.
5) Turn On Clothes Dryers And Any Appliance Not Connected To The Venting System. Turn On Any Exhaust Fans, Such As Range Hoods And Bathroom Exhausts, So They Are Operating At Maximum Speed. Do Not Operate A Summer Exhaust Fan.
6) Follow The Lighting Instructions. Place The Appliance Being Inspected Into Operation. Adjust The Thermostat So Appliance Is Operating Continuously.
7) Test For Spillage From Draft Hood Equipped Appliances At The Draft Hood Relief Opening After 5 Minutes Of Main Burner Operation. Use The Flame Of A Match Or Candle.
8) If Improper Venting Is Observed During Any Of The Above Tests, The Venting System Must Be Corrected In Accordance With The National Fuel Gas Code, Ansi Z223.1/nfpa 54 And/or Natural Gas And Propane Installation Code, Csa B149.1.
9) After It Has Been Determined That Each Appliance Connected To The Venting System Properly Vents When Tested As Outlined Above, Return Doors, Windows, Exhaust Fans, Fireplace Dampers And Any Other Gas-fired Burning Appliance To Their Previous Conditions Of Use.

## AVERTISSEMENT

**RISQUE D'INTOXICATION AU MONOXYDE DE CARBONE**

Si les étapes décrites ci-dessous ne sont pas suivies pour chacun des appareils raccordés au système de ventilation au moment de sa mise en marche, cela peut entraîner une intoxication au monoxyde de carbone ou la mort. Les étapes suivantes doivent être suivies pour chacun des appareils raccordés au système de ventilation au moment de sa mise en marche, alors que tous les autres appareils raccordés au système de ventilation ne sont pas en marche:

1) Sceller toutes les ouvertures inutilisées du système de ventilation.
2) Inspecter le système de ventilation afin de vérifier si la taille et l'inclinaison par rapport à l'horizontale sont conformes aux exigences du National Fuel Gas Code, ANSI Z223.1/NFPA 54 ou du Code d'installation du gaz naturel et du propane, CSA B149.1 et à ces instructions. Vérifier qu'il n'y pas d'obstruction ou de pourraient entraîner une situation dangereuse.
3) Si possible, fermer toutes les portes et fenêtres du bâtiment ainsi que toutes les portes séparant l'endroit où se trouvent les appareils raccordés au système de ventilation et less autres zones du bâtiment.
4) Fermer le registre des foyers.
5) Mettre les sécheuses en marche ainsi que tous les autres appareils qui ne sont pas raccordés au systéme de ventilation. Mettre en marche tous les ventilateurs de tirage, comme celui des hottes de cuisine et des salles de bains, et les régler à la puissance maximale. Ne pas mettre en marche les ventilateurs d'été.
6) Suivre les instructions d'allumage. Mettre en marche l'appareil soumis à l'inspection. Régler le thermostat de manièr à ce que l'appareil fonctionne en continu.
7) Vérifier la présence de fuite au niveau de l'ouverture du coupe-tirage des appareils qui en sont dotés après 5 minutes de fontionnement du brûleur principal. Utiliser la flamme d'une allumette ou d'une bougie.
8) Si un problème de ventilation est observé pendant l'un des essaid décrits ci-dessus, des correctifs doivent être apportés au système de ventilation conformé National Fuel Gas Code, Ansi Z223.1/nfpa 54 And/or Natural Gas And Propane Installation Code, Csa B149.1.
9) Une fois qu'il été déterminé que chaque appareil raccordé au système de ventilation fontionne correctement au moyen des essais décrits ci-dessus, les portes, les fenêtres, les ventilateurs, les registres de foyer et tous les autres appareils de combustion alimentés au gaz doivent être remis dans leur état initial.

**DANGER**

**CARBON MONOXIDE POISONING HAZARD**

**Special Warning for Installation of Furnace or Air Handling Units in Enclosed Areas such as Garages, Utility Rooms or Parking Areas**

Carbon monoxide producing devices (such as an automobile, space heater, gas water heater, etc.) should not be operated in enclosed areas such as unventilated garages, utility rooms or parking areas because of the danger of carbon monoxide (CO) poisoning resulting from the exhaust emissions. If a furnace or air handler is installed in an enclosed area such as a garage, utility room or parking area and a carbon monoxide producing device is operated therein, there must be adequate, direct outside ventilation.

This ventilation is necessary to avoid the danger of CO poisoning which can occur if a carbon monoxide producing device continues to operate in the enclosed area. Carbon monoxide emissions can be (re)circulated throughout the structure if the furnace or air handler is operating in any mode.

CO can cause serious illness including permanent brain damage or death. B10259-216

**DANGER**
**PELIGRO**

**RIESGO DE INTOXICACIÓN POR MONÓXIDO DE CARBONO**

**Advertencia especial para la instalación de calentadores ó manejadoras de aire en áreas cerradas como estacionamientos ó cuartos de servicio.**

Los equipos ó aparatos que producen monóxido de carbono (tal como automóvil, calentador de gas, calentador de agua por medio de gas, etc) no deben ser operados en áreas cerradas debido al riesgo de envenenamiento por monóxido de carbono (CO) que resulta de las emisiones de gases de combustión. Si el equipo ó aparato se opera en dichas áreas, debe existir una adecuada ventilación directa al exterior.

Esta ventilación es necesaria para evitar el peligro de envenenamiento por CO, que puede ocurrir si un dispositivo que produce monóxido de carbono sigue operando en el lugar cerrado.

Las emisiones de monóxido de carbono pueden circular a través del aparato cuando se opera en cualquier modo.

El monóxido de carbono puede causar enfermedades severas como daño cerebral permanente ó muerte. B10259-216

**DANGER**

**RISQUE D'EMPOISONNEMENT AU MONOXYDE DE CARBONE**

**Advertencia especial para la instalación de calentadores ó manejadoras de aire en áreas cerradas como estacionamientos ó cuartos de servicio.**

Avertissement special au sujet de l'installation d'appareils de hauffage ou de traitement d'air dans des endroits clos, tets les garages, les locaux d'entretien et les stationnements. Evitez de mettre en marche les appareils produisant du monoxyde de carbone (tels que les automobile, les appareils de chauffage autonome,etc.) dans des endroits non ventilés tels que les d'empoisonnement au monoxyde de carbone. Si vous devez faire fonctionner ces appareils dans un endroit clos, assures-vous qu'il y ait une ventilation directe provenant de l'exterier.

Cette ventilation est nécessaire pour éviter le danger d'intoxication au CO pouvant survenir si un appareil produisant du monoxyde de carbone continue de fonctionner au sein de la zone confinée.

Les émissions de monoxyde de carbone peuvent etre recircules dans les endroits clos, si l'appareil de chauffage ou de traitement d'air sont en marche.

Le monoxyde de carbone peut causer des maladies graves telles que des dommages permanents au cerveau et meme la mort. B10259-216

## Additional Safety Considerations

- This furnace is approved for Category I Venting only.
- Provisions must be made for venting combustion products outdoors through a proper venting system. The length of flue pipe could be a limiting factor in locating the furnace.

## Shipping Inspection

All units are securely packed in shipping containers tested according to International Safe Transit Association specifications. The carton must be checked upon arrival for external damage. If damage is found, a request for inspection by carrier's agent must be made in writing immediately.

The furnace must be carefully inspected on arrival for damage and bolts or screws which may have come loose in transit. In the event of damage the consignee should:

1. Make a notation on delivery receipt of any visible damage to shipment or container.
2. Notify carrier promptly and request an inspection.
3. With concealed damage, carrier must be notified as soon as possible - preferably within five days.
4. File the claim with the following support documents within a nine month statute of limitations.

- Original or certified copy of the Bill of Lading, or indemnity bond.
- Original paid freight bill or indemnity in lieu thereof.
- Original or certified copy of the invoice, showing trade and other discounts or reductions.
- Copy of the inspection report issued by carrier's representative at the time damage is reported to carrier.

The carrier is responsible for making prompt inspection of damage and for a thorough investigation of each claim. The distributor or manufacturer will not accept claims from dealers for transportation damage.

***Keep this literature in a safe place for future reference.***

## Electrostatic Discharge (ESD) Precautions

**NOTE:** Discharge your body's static electricity before touching unit. An electrostatic discharge can adversely affect electrical components.

Use the following precautions during furnace installation and servicing to protect the integrated control module from damage. By putting the furnace, the control, and the person at the same electrostatic potential, these steps will help avoid exposing the integrated control module to electrostatic discharge. This procedure is applicable to both installed and non-installed (ungrounded) furnaces.

1. Disconnect all power to the furnace. Do not touch the integrated control module or any wire connected to the control prior to discharging your body's electrostatic charge to ground.
2. Firmly touch a clean, unpainted, metal surface of the furnaces near the control. Any tools held in a person's hand during grounding will be discharged.
3. Service integrated control module or connecting wiring following the discharge process in step 2. Use caution not to recharge your body with static electricity; (i.e., do not move or shuffle your feet, do not touch ungrounded objects, etc.). If you come in contact with an ungrounded object, repeat step 2 before touching control or wires.
4. Discharge your body to ground before removing a new control from its container. Follow steps 1 through 3 if installing the control on a furnace. Return any old or new controls to their containers before touching any ungrounded object.

## To The Installer

Before installing this unit, please read this manual thoroughly to familiarize yourself with specific items which must be adhered to, including but not limited to: unit maximum external static pressure, gas pressures, BTU input rating, proper electrical connections, circulating air temperature rise, minimum or maximum CFM, and motor speed connections, and venting. These furnaces are designed for Category I venting only.

**⚠ WARNING**

**To prevent property damage, personal injury or death due to fire, do not install this furnace in a mobile home, trailer, or recreational vehicle.**

## *Product Application*

This furnace is primarily designed for residential home-heating applications. It is NOT designed or certified for use in mobile homes, trailers or recreational vehicles. Neither is it designed or certified for outdoor applications. The furnace **must** be installed indoors (i.e., attic space, crawl space, or garage area provided the garage area is enclosed with an operating door).

This furnace can be used in the following non-industrial commercial applications:

**Schools, Office buildings, Churches, Retail stores, Nursing homes, Hotels/motels, Common or office areas**

In such applications, the furnace must be installed with the following stipulations:

- It must be installed per the installation instructions provided and per local and national codes.
- It must be installed indoors in a building constructed on site.
- It must be part of a ducted system and not used in a free air delivery application.
- It must not be used as a “make-up” air unit.
- All other warranty exclusions and restrictions apply.

This furnace may be used as a construction site heater **ONLY** if the following conditions are met:

- The vent system is permanently installed per these installation instructions.
- A room thermostat is used to control the furnace. Fixed jumpers that provide continuous heating CANNOT be used and can cause long term equipment damage. Bi-metal thermostats, or any thermostat affected by vibration must not be used during construction.
- Return air ducts are provided and sealed to the furnace.
- A return air temperature range between 60°F (16°C) and 80°F (27°C) is maintained.
- Air filters are installed in the system and replaced daily during construction and upon completion of construction.
- The input rate and temperature rise are set per the furnace rating plate.
- 100% outside air must be used for combustion during construction. Temporary ducting may be used to supply outside air to the furnace for combustion – do not connect this duct directly to the furnace. Size this duct according to NFPA 54/ANSI Z223.1 section for Combustion and Ventilation Air.
- The furnace heat exchanger, components, duct system, air filters and evaporator coils are thoroughly cleaned following final construction clean up by a qualified person.
- All furnace operating conditions (including ignition, input rate, temperature rise and venting) are verified by a qualified person according to these installation instructions.
- Furnace doors must be in place on the furnace while the furnace is operating in any mode.

Damage or repairs due to failure to comply with these requirements are not covered under the warranty.

**To ensure proper furnace operation, install, operate and maintain the furnace in accordance with these installation and operation instructions, all local building codes and ordinances.** In their absence, follow the latest edition of the National Fuel Gas Code (NFPA 54/ANSI Z223.1), local plumbing or waste water codes, and other applicable codes.

A copy of the National Fuel Gas Code (NFPA 54/ANSI Z223.1) can be obtained from any of the following:

**American National Standards Institute**
25 West 43rd Street, 4th Floor
New York, NY 10036

**National Fire Protection Association**
1 Batterymarch Park
Quincy, MA 02169-7471

**CSA International**
8501 East Pleasant Valley
Cleveland, OH 44131

Additional helpful publications available from the NFPA are, NFPA 90A - Installation of Air Conditioning and Ventilating System and NFPA 90B - Warm Air Heating and Air Conditioning System.

The rated heating capacity of the furnace should be greater than or equal to the total heat loss of the area to be heated. The total heat loss should be calculated by an approved method or in accordance with “ASHRAE Guide” or “Manual J-Load Calculations” published by the Air Conditioning Contractors of America.

## *Location Requirements and Considerations*

**⚠ WARNING**

**To prevent possible equipment damage, property damage, personal injury or death, the following bullet points must be observed when installing this unit.**

Follow the instructions listed below when selecting a furnace location. Refer also to the guidelines provided in *Combustion and Ventilation Air Requirements.*

- Centrally locate the furnace with respect to the proposed or existing air distribution system.
- Ensure the temperature of the return air entering the furnace is between 55°F and 100°F when the furnace is heating.
- Provisions must be made for venting combustion products outdoors through a proper venting system. The length of flue pipe could be a limiting factor in locating the furnace.
- Ensure adequate combustion air is available for the furnace. Improper or insufficient combustion air can expose building occupants to gas combustion products that could include carbon monoxide. Refer to *Combustion and Ventilation Air Requirements.*
- The furnace must be level. If the furnace is to be set on a floor that may become wet or damp at times, the furnace should be supported above the floor on a concrete base sized approximately 1-1/2" larger than the base of the furnace.
- Ensure upflow or horizontal furnaces are not installed directly on carpeting, or any other combustible material. The only combustible material allowed is wood.
- Exposure to contaminated combustion air will result in safety and performance-related problems. Do not install the furnace where the combustion air is exposed to the following substances:

  permanent wave solutions
  chlorinated waxes or cleaners
  chlorine-based swimming pool chemicals
  carbon tetrachloride
  water softening chemicals
  swiming pool chemicals
  deicing salts or chemicals
  halogen type refrigerants
  printing inks
  cleaning solutions (such as perchloroethylene)
  paint removers
  varnishes
  hydrochloric acid
  cements and glues
  antistatic fabric softeners for clothes dryers
  masonry acid washing materials

- If the furnace is used in connection with a cooling unit, install the furnace upstream or in parallel with the cooling unit coil. Premature heat exchanger failure will result if the cooling unit coil is placed ahead of the furnace.

  For vertical (upflow) applications, the minimum cooling coil width shall not be less than furnace width minus 1". Additionally, a coil installed above an upflow furnace may be the same width as the furnace or may be one size larger than the furnace. Example: a "C" width coil may be installed with a "B" width furnace.

  For upflow applications, the front of the coil and furnace must face the same direction.
- If the furnace is installed in a residential garage, position the furnace so that the burners and ignition source are located not less than 18 inches above the floor. Protect the furnace from physical damage by vehicles.
- If the furnace is installed horizontally, ensure access doors are not on the "up/top" or "down/bottom" side of the furnace.
- Do not connect this furnace to a chimney flue that serves a separate appliance designed to burn solid fuel.

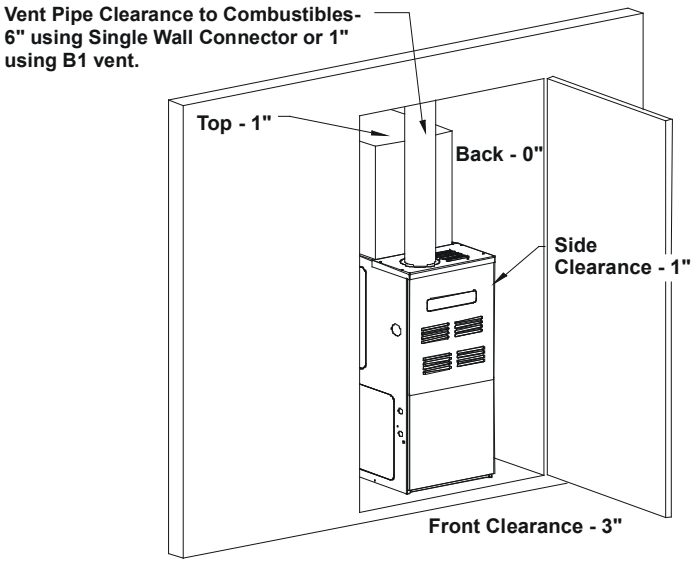


**Figure 1**

- Adequate combustion/ventilation air must be supplied to the closet. Improper or insufficient combustion air can expose building occupants to gas combustion products that could include carbon monoxide.
- Furnace must be **completely** sealed to floor or base. Combustion/ ventilation air supply pipes must terminate 12" from top of closet and 12" from floor of closet. DO NOT remove solid base plate for side return.
- Return air ducts must be **completely** sealed to the furnace and terminate outside the enclosure surfaces.

## Clearances and Accessibility

**NOTE:** For servicing or cleaning, a 24” front clearance is required. Unit connections (electrical, flue and drain) may necessitate greater clearances than the minimum clearances listed above. In all cases, accessibility clearance must take precedence over clearances from the enclosure where accessibility clearances are greater.

Clearance in accordance with local installation codes, the requirements of the gas supplier and the manufacturer’s installation instructions.
Dégaugement conforme aux codes d’installation locaux, aux exigences du fournisseur de gaz et aux instructions d’installation du fabricant.

| VENT | | SIDES | FRONT | BACK | TOP (PLENUM) |
|---|---|---|---|---|---|
| B1-VENT | SINGLE | | | | |
| 1" | 6" | 1" | 3" | 0" | 1" |

**Top clearance for horizontal configuration - 1”**
**Table 1**

Installations must adhere to the clearances to combustible materials to which this furnace has been design certified. The minimum clearance information for this furnace is provided on the unit’s clearance label. These clearances must be permanently maintained. Clearances must also accommodate an installation’s gas, electrical, and drain line connections.

**NOTE:** In addition to the required clearances to combustible materials, a minimum of 24” service clearance must be available in front of the unit.

## Installation Positions

An upflow furnace may be installed in an upright position or horizontal on either the left or right side panel. Do not install this furnace on its back. For vertically installed *upflow* furnaces, return air ductwork may be attached to the side panel(s) and/or basepan. For *horizontally* installed *upflow* furnaces, return air ductwork must be attached to the basepan. Contact your distributor for proper airflow requirements and number of required ductwork connections. Refer to, “Recommended Installation Positions” for approproate installation positions, ductwork connections, and resulting airflow arrangements.

**NOTE:** Ductwork must never be attached to the back of the furnace.

## Venting for Horizontal Left or Right Installations

Always use a B-vent elbow to vent the flue from the top of the furnace. The inducer cannot be turned due to limited space in the cabinet. Do not attempt to do this.

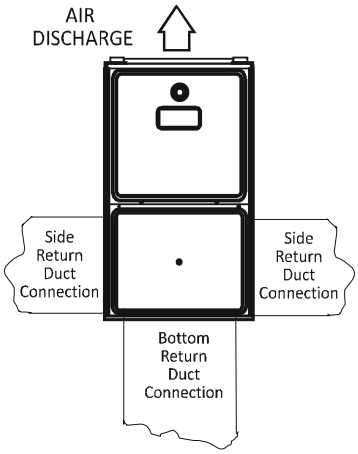


**UPFLOW UPRIGHT**
**Figure 2**

## Horizontal Installation

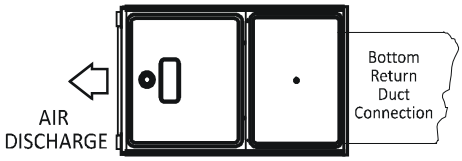


**UPFLOW HORIZONTAL**
**LEFT AIR DISCHARGE**

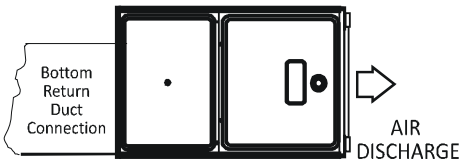


**UPFLOW HORIZONTAL**
**RIGHT AIR DISCHARGE**

Recomended Installation Positions
**Figure 3**

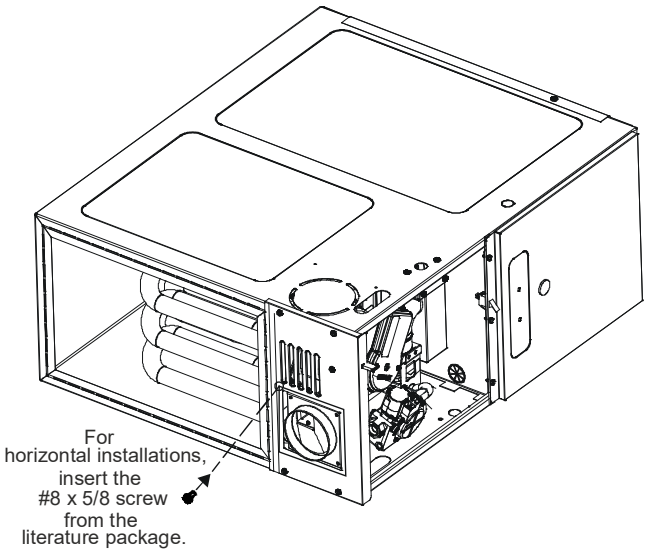


**Figure 4**

Line contact to framing is permitted when installed in the horizontal configuration. Line contact is defined as the portion of the cabinet that is formed by the intersection of the top and side. ACCESSIBILITY CLEARANCE, WHERE GREATER, SHOULD TAKE PRECEDENCE OVER MINIMUM FIRE PROTECTION CLEARANCE. A gas-fired furnace for installation in a residential garage must be installed so that the ignition source and burners are located not less than eighteen inches (18") above the floor and is protected or located to prevent physical damage by vehicles. A gas furnace must not be installed directly on carpeting, tile, or other combustible materials other than wood flooring.

## Furnace Suspension

If suspending the furnace from rafters or joist, use 3/8" threaded rod and 2"x2"x3/8" angle iron as shown below. The length of rod will depend on the application and the clearances necessary.

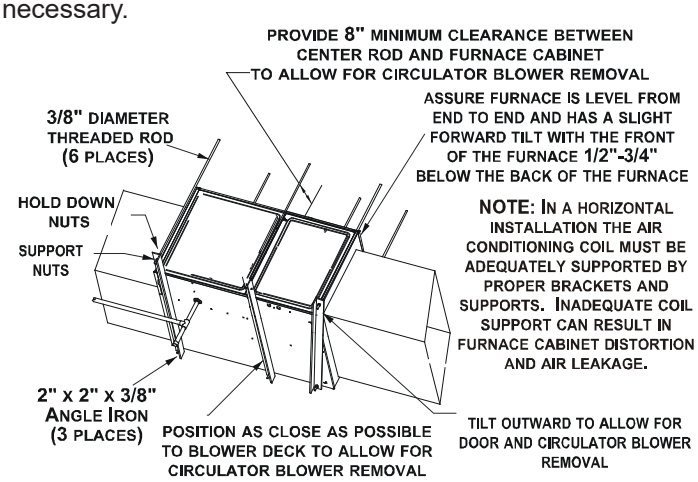


**Suspended Furnace**
**Figure 5**

## Existing Furnace Removal

**NOTE:** When an existing furnace is removed from a venting system serving other appliances, the venting system may be too large to properly vent the remaining attached appliances.

The following vent testing procedure is reproduced from the **American National Standard/National Standard of Canada for Gas-Fired Central Furnaces ANSI Z21.47-Latest Edition, CSA-2.3-Latest Edition Section 1.23.1.** The following steps shall be followed with each appliance connected to the venting system placed in operation, while any other appliances connected to the venting system are not in operation:

a. Seal any unused openings in the venting system;
b. Inspect the venting system for proper size and horizontal pitch, as required by the National Fuel Gas Code, ANSI Z223.1 and these instructions. Determine that there is no blockage or restriction, leakage, corrosion and other deficiencies which could cause an unsafe condition;
c. In so far as practical, close all building doors and windows and all doors between the space in which the appliance(s) connected to the venting system are located and other spaces of the building. Turn on clothes dryers and any appliance not connected to the venting system. Turn on any exhaust fans, such as range hoods and bathroom exhausts, so they shall operate at maximum speed. Do not operate a summer exhaust fan. Close fireplace dampers;
d. Follow the lighting instructions. Place the appliance being inspected in operation. Adjust thermostat so appliance shall operate continuously;
e. Test for draft hood equipped appliance spillage at the draft hood relief opening after 5 minutes of main burner operation. Use the flame of a match or candle;
f. After it has been determined that each appliance connected to the venting system properly vents when tested as outlined above, return doors, windows, exhaust fans, fireplace dampers and any other gas burning appliance to their previous conditions of use;
g. If improper venting is observed during any of the above tests, the common venting system must be corrected.

Corrections must be in accordance with the latest edition of the National Fuel Gas Code NFPA 54/ANSI Z223.1.

If resizing is required on any portion of the venting system, use the appropriate table in the latest edition of the National Fuel Gas Code ANSI Z223.1.

## Thermostat Location

The thermostat should be placed approximately five feet from the floor on a vibration-free, inside wall in an area having good air circulation. Do not install the thermostat where it may be influenced by any of the following:

- Drafts, or dead spots behind doors, in corners, or under cabinets.
- Hot or cold air from registers.
- Radiant heat from the sun.
- Light fixtures or other appliances.
- Radiant heat from a fireplace.
- Concealed hot or cold water pipes, or chimneys.
- Unconditioned areas behind the thermostat, such as an outside wall.

Consult the instructions packaged with the thermostat for mounting instructions and further precautions.

## Combustion and Ventilation Air Requirements

**WARNING**

**To avoid property damage, personal injury or death, sufficient fresh air for proper combustion and ventilation of flue gases must be supplied. Most homes require outside air be supplied into the furnace area.**

Improved construction and additional insulation in buildings have reduced heat loss by reducing air infiltration and escape around doors and windows. These changes have helped in reducing heating/cooling costs but have created a problem supplying combustion and ventilation air for gas fired and other fuel burning appliances. Appliances that pull air out of the house (clothes dryers, exhaust fans, fireplaces, etc.) increase the problem by starving appliances for air.

House depressurization can cause back drafting or improper combustion of gas-fired appliances, thereby exposing building occupants to gas combustion products that could include carbon monoxide.

If this furnace is to be installed in the same space with other gas appliances, such as a water heater, ensure there is an adequate supply of combustion and ventilation air for all appliances. Refer to the latest edition of the National Fuel Gas Code NFPA 54/ANSI Z223.1 or applicable provisions of the local building codes for determining the combustion air requirements for the appliances.

*This furnace must use indoor air for combustion. It cannot be installed as a direct vent (i.e., sealed combustion) furnace.*

Most homes will require outside air be supplied to the furnace area by means of ventilation grilles or ducts connecting directly to the outdoors or spaces open to the outdoors such as attics or crawl spaces. A furnace installed in a confined space (i.e., a closet or utility room) must have two ventilation openings with a total minimum free area of 0.25 square inches per 1,000 BTU/hr of furnace input rating. Refer to Specification Sheet applicable to your model for minimum clearances to combustible surfaces. One of the ventilation openings must be within 12” of the top; the other opening must be within 12” of the bottom of the confined space. In a typical construction, the clearance between the door and door frame is usually adequate to satisfy this ventilation requirement.

## Category I Venting (Vertical Venting)

**WARNING**

**To prevent possible personal injury or death due to asphyxiation, this furnace must be Category I vented. Do not vent using Category III venting.**

Category I Venting is venting at a non-positive pressure. A furnace vented as Category I is considered a fan-assisted appliance and the vent system does not have to be “gas tight.” **NOTE:** Single stage gas furnaces with induced draft blowers draw products of combustion through a heat exchanger allowing, in some instances, common venting with natural draft appliances (i.e. water heaters). All installations must be vented in accordance with the latest edition of the National Fuel Gas Code NFPA 54/ANSI Z223.1 .

**Note:** The vertical height of the category 1 venting system must be at least as great as the horizontal length of the vertical system.

**WARNING**

**To prevent possible personal injury or death due to asphyxiation, common venting with other manufacturer’s induced draft appliances is not allowed.**

The minimum vent diameter for the Category I venting system is as shown:

| MODEL | MINIMUM VENT |
|---|---|
| | UPFLOW |
| 40 | 4 Inch |
| 60 | 4 Inch |
| 80 | 4 Inch |

**Table 2**

Under some conditions, larger vents than those shown above may be required or allowed. *When an existing furnace is removed from a venting system serving other appliances*, the venting system may be too large to properly vent the remaining attached appliances.

## Masonry Chimneys

**WARNING**

**Possibility of property damage, personal injury or death damaging condensation can occur inside masonry chimneys when a single fan-assisted Category I appliance (80% AFUE furnace) is vented without adequate dilution air. Do not connect an 80% furnace to a masonry chimney unless the furnace is common vented with a draft hood equipped appliance or the chimney is lined with a metal liner or Type B metal vent. All installations using masonry chimneys must be sized in accordance with the appropriate venting tables. If an 80% furnace is common vented with a draft hood equipped appliance, the potential for condensation damage may still exist with extremely cold conditions, long vent connectors, exterior chimneys, or any combination of these conditions. The risk of condensation damage is best avoided by using masonry chimney as a pathway for properly sized metal liner or Type B metal vent.**

### Masonry Chimney Termination

A masonry chimney used as a vent for gas fired equipment must extend at least three feet above the highest point where it passes through the roof. It must extend at least two feet higher than any portion of a building within a horizontal distance of 10 feet. In addition, the chimney must terminate at least 3 feet above any forced air inlet located within 10 feet. The chimney must extend at least five feet above the highest connected equipment draft hood outlet or flue collar.

## *Electrical Connections*

**WARNING**

**HIGH VOLTAGE !**

**To avoid personal injury or death due to electrical shock, disconnect electrical power before servicing or changing any electrical wiring.**

**CAUTION**

**Label all wires prior to disconnection when servicing controls. Wiring errors can cause improper and dangerous operation. Verify proper operation after servicing.**

**WARNING**

**HIGH VOLTAGE !**

**To avoid the risk of injury, electrical shock or death, the furnace must be electrically polarized and grounded in accordance with local codes or in their absence, with the latest edition of the National Electric Code.**

### Wiring Harness

The wiring harness is an integral part of this furnace. Field alteration to comply with electrical codes should not be required. Wires are color coded for identification purposes. Refer to the wiring diagram for wire routings. If any of the original wire as supplied with the furnace must be replaced, it must be replaced with wiring material having a temperature rating of at least 105°C. Any replacement wiring must be a copper conductor.

### 120 Volt Line Connections

Before proceeding with electrical connections, ensure that the supply voltage, frequency, and phase correspond to that specified on the unit rating plate. Power supply to the furnace must be NEC Class 1, and must comply with all applicable codes. The furnace must be electrically grounded in accordance with local codes or, in their absence, with the atest edition of The National Electric Code, ANSI NFPA 70.

Use a separate fused branch electrical circuit containing properly sized wire, and fuse or circuit breaker. The fuse or circuit breaker must be sized in accordance with the maximum overcurrent protection specified on the unit rating plate. An electrical disconnect must be provided at the furnace location.

*Line voltage wiring* must enter into the junction box provided with the furnace. Connect hot neutral and ground wires as shown in the wiring diagram located on the unit's blower door. Metal conduit is not considered a substitute for an actual ground wire to the unit.

Line polarity must be observed when making field connections. Line voltage connections can be made through either the right or left side panel. To relocate the junction box, follow the steps shown in the Junction Box Relocation section.

### Junction Box Relocation

**WARNING**

**Edges of sheet metal holes may be sharp. Use gloves as a precaution when removing hole plugs.**

Line voltage connections can be made through either the right or left side panel. The furnace is shipped configured for a right side electrical connection. To make electrical connections through the opposite side of the furnace, the junction box must be relocated to the left side prior to making electrical connections. To relocate the junction box, perform the following steps.

**WARNING**

**To prevent personal injury or death due to electric shock, disconnect electrical power before installing or servicing this unit.**

1. Remove both doors from the furnace.
2. Remove and save the screws holding the junction box to the right side of the furnace.
3. Models that have the junction box located in the burner compartment will need to move the junction box directly over.

4. Attach the junction box to the left side of the furnace, using the screws removed in step 2.
5. Check the location of the wiring. Confirm that it will not be damaged by heat from the burners or by the rotation of the fan. Also confirm that wiring location will not interfere with filter removal or other maintenance.

After the junction box is in the desired location, use washers to connect field-supplied conduit to the junction box in accordance with NEC and local codes. Connect hot, neutral, and ground wires as shown in the furnace wiring diagram. The wires and ground screw are located in the furnace junction box.

Low voltage wires may be connected to the terminal strip.

**IMPORTANT NOTE:** To avoid possible equipment malfunction, route the low voltage wires to avoid interference with filter removal or other maintenance.

**WARNING**

**HIGH VOLTAGE !**

**TO AVOID THE RISK OF INJURY, ELECTRICAL SHOCK OR DEATH, THE FURNACE MUST BE ELECTRICALLY GROUNDED IN ACCORDANCE WITH LOCAL CODES OR IN THEIR ABSENCE, WITH THE LATEST EDITION OF THE NATIONAL ELECTRIC CODE.**

To ensure proper unit grounding, the ground wire should run from the furnace ground screw located inside the furnace junction box all the way back to the electrical panel. **NOTE:** Do not use gas piping as an electrical ground. To confirm proper unit grounding, turn off the electrical power and perform the following check.

1. Measure resistance between the neutral (white) connection and the unpainted surface on the furnace.
2. Resistance should measure 10 ohms or less.

This furnace is equipped with a blower door interlock switch which interrupts unit voltage when the blower door is opened for servicing. Do not defeat this switch.

## 24 Volt Thermostat Wiring

**NOTE:** Wire routing must not interfere with circulator blower operation, filter removal, or routine maintenance.

Low voltage connections can be made through either the right or left side panel. Thermostat wiring entrance holes are located in the blower compartment. The following figure shows connections for a “heat only” system and “heat/cool system”.

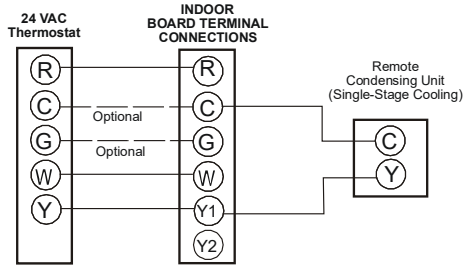


**Non-communicating Single Stage A/C**

**Figure 6A**

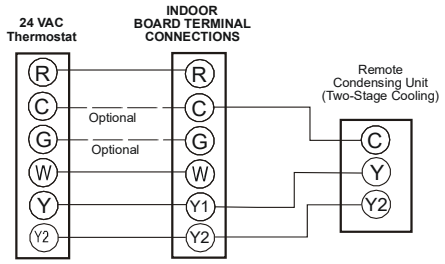


**Non-communicating Two Stage A/C**

**Figure 6B**

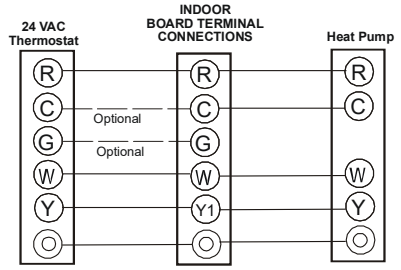


**Non-Communicating Single Stage Heat Pump**

**Figure 6C**

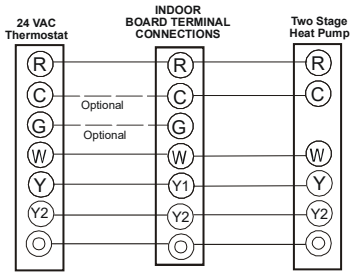


**Non-Communicating Two Stage Heat Pump**

**Figure 6D**

**NOTE:** Equipment type (Single-stage cooling, Two-stage cooling, Single-stage heat pump, Two-stage heat pump) **MUST** be setup through the OdS menu by the installer for proper system operation. See Using Push-Button Switches for instructions on how to navigate the control menu.

This furnace is equipped with a 40 VA transformer to facilitate use with most cooling equipment. Consult the wiring diagram, located on the blower compartment door, for further details of 120 Volt and 24 Volt wiring.

A single-stage thermostat with only one heating stage is needed to control this furnace.

## 120 Volt Line Connection of Accessories

## Humidifier and Electronic Air Cleaner

**WARNING**

**HIGH VOLTAGE !**

**TO AVOID PERSONAL INJURY OR DEATH DUE TO ELECTRICAL SHOCK, DISCONNECT ELECTRICAL POWER BEFORE SERVICING OR CHANGING ANY ELECTRICAL WIRING.**

The furnace integrated control module is equipped with de-di-cated ¼ inch EAC and HUM relay terminals for controlling external power to an optional field-supplied humidifier and/or electronic air cleaner. Additional line voltage wiring to the inside of the furnace must conform to all local codes and have a minimum temperature rating of 105°C. All line voltage wire splices must be made inside the furnace.

When utilized, the HUM relay will be closed during normal heating operation and the EAC relay will be closed during fan operation. 115VAC must be present on the one terminal from HUM or EAC to take advantage of the second terminal.

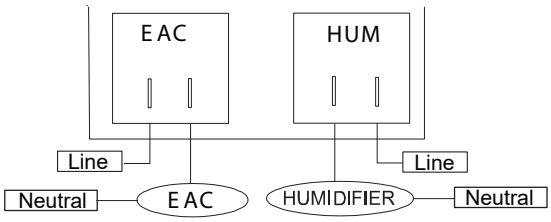


**Figure 7**

## Fossil Fuel Applications

This furnace can be used in conjunction with a heat pump in a fossil fuel application. A fossil fuel application refers to a combined gas furnace and heat pump installation which uses an outdoor temperature sensor to determine the most cost efficient means of heating heat pump or gas furnace.

A heat pump thermostat with *two stages of heat* is required to properly use a furnace in conjunction with a heat pump. Refer to the fossil fuel kit installation instructions for additional thermostat requirements.

Strictly follow the wiring guidelines in the fossil fuel kit installation instructions. All furnace connections must be made to the furnace integrated control module and the FURNACE terminal strip on the fossil fuel control board.

# *Gas Supply and Piping*

The furnace rating plate includes the approved furnace gas input rating and gas types. The furnace must be equipped to operate on the type of gas applied.

**CAUTION**

**To prevent unreliable operation or equipment damage, the inlet gas supply pressure must be as specified on the unit rating plate with all other household gas fired appliances operating.**

Inlet gas supply pressures must be maintained within the ranges specified in the following table. The supply pressure must be constant and available with all other household gas fired appliances operating. The minimum gas supply pressure must be maintained to prevent unreliable ignition. The maximum must not be exceeded to prevent unit overfiring and damage to gas valve.

**NOTE:** Do not remove the gas valve inlet plug before the gas line is installed. Replace if water or debris has been introduced.

| INLET GAS SUPPLY PRESSURE | | |
|---|---|---|
| Natural Gas | Minimum: 4.5" w.c. | Maximum: 10.0" w.c. |

**Table 4**

## High Altitude Derate

**IMPORTANT NOTE:** The furnace, as shipped, requires no change to run between 0-4500 feet. Manifold pressure adjustments and combustion analysis are required for all installations above 4500 ft. Refer to “Gas Supply Pressure Measurement” section for instruction on how to properly measure and adjust manifold “outlet” pressure. The furnace should operate for a minimum of 15 minutes before taking a combustion sample. Combustion samples should be taken from beyond the furnace exhaust and must be within provided CO2% range. See Table 5 for recommended manifold pressure adjustments and proper CO2% range. Gas heating values can vary; further pressure adjustment may be necessary to ensure furnace operates within acceptable CO2 range. At all altitudes the air temperature rise must be within the range listed on the the Specification Sheet applicable to your model for the fuel used.

| 80% Model | Manifold Pressure at 5000 ft | Manifold Pressure at 7500 ft | CO2% Natural Gas |
|---|---|---|---|
| 040 | 2.5" w.c. | 2.4" w.c. | 5.5 - 7.0 |
| 060 | 2.5" w.c. | 2.4" w.c. | 5.7 - 7.2 |
| 080 | 2.5" w.c. | 2.4" w.c. | 6.0 - 7.5 |

**Table 5**

## Gas Piping Connections

**WARNING**

**To avoid possible unsatisfactory operation or equipment damage due to underfiring of equipment, use the proper size of natural gas piping needed when running pipe from the meter to the furnace.**

When sizing gas lines, be sure to include all appliances on the same gas supply line and which will operate simultaneously.

The gas piping supplying the furnace must be properly sized based on the gas flow required, specific gravity of the gas, and length of the run. The gas line installation must comply with local codes, or in their absence, with the latest edition of the National Fuel Gas Code, NFPA 54/ANSI Z223.1.

**Natural Gas Capacity of Pipe**
**In Cubic Feet of Gas Per Hour (CFH)**

| Length of Pipe in Feet | Nominal Black Pipe Size | | | | |
|---|---|---|---|---|---|
| | 1/2" | 3/4" | 1" | 1 1/4" | 1 1/2" |
| 10 | 132 | 278 | 520 | 1050 | 1600 |
| 20 | 92 | 190 | 350 | 730 | 1100 |
| 30 | 73 | 152 | 285 | 590 | 980 |
| 40 | 63 | 130 | 245 | 500 | 760 |
| 50 | 56 | 115 | 215 | 440 | 670 |
| 60 | 50 | 105 | 195 | 400 | 610 |
| 70 | 46 | 96 | 180 | 370 | 560 |
| 80 | 43 | 90 | 170 | 350 | 530 |
| 90 | 40 | 84 | 160 | 320 | 490 |
| 100 | 38 | 79 | 150 | 305 | 460 |

(Pressure 0.5 psig or less and pressure drop of 0.3" W.C.; Based on 0.60 Specific Gravity Gas)

$$\text{CFH} = \frac{\text{BTUH Furnace Input}}{\text{Heating Value of Gas (BTU/Cubic Foot)}}$$

**Table 6**

To connect the furnace to the building's gas piping, the installer must supply a ground joint union, drip leg, manual shutoff valve, and line and fittings to connect to gas valve. In some cases, the installer may also need to supply a transition piece from 1/2" pipe to a larger pipe size.

The following stipulations apply when connecting gas piping.

- Gas piping must be supported external to the furnace cabinet so that the weight of the gas line does not distort the burner rack, manifold or gas valve.
- Use black iron or steel pipe and fittings for the building piping. Where possible, use new pipe that is properly chamfered, reamed, and free of burrs and chips. If old pipe is used, be sure it is clean and free of rust, scale, burrs, chips, and old pipe joint compound.
- Use pipe joint compound on male threads ONLY. Always use pipe joint compound (pipe dope) that is APPROVED FOR ALL GASSES. DO NOT apply compound to the first two threads.
- Use ground joint unions.
- Install a drip leg to trap dirt and moisture before it can enter the gas valve. The drip leg must be a minimum of three inches long.
- Install a 1/8" NPT pipe plug fitting, accessible for test gage connection, immediately upstream of the gas supply connection to the furnace.
- Always use a back-up wrench when making the connection to the gas valve to keep it from turning. The orientation of the gas valve connection is 374 in-lbs; excessive over-tightening may damage the gas valve and/or gas manifold assembly.
- Install a manual shutoff valve between the gas meter and unit within six feet of the unit. If a union is installed, the union must be downstream of the manual shutoff valve, between the shutoff valve and the furnace.
- Tighten all joints securely.
- Protect connectors and semi-rigid tubing against physical and thermal damage when installed. Ensure aluminum-alloy tubing and connectors are coated to protect against external corrosion when in contact with masonry, plaster, or insulation, or subjected to repeated wetting by liquids such as water (except rain water), detergents, or sewage. The gas piping may enter the left or right side of the furnace cabinet. The installer must supply rigid pipe long enough to reach the outside of the cabinet to seal the grommet cabinet penetration. A semi-rigid connector to the gas piping can be used outside the cabinet per local codes. 1/2" NPT pipe and fittings are required. Model requires one 90 deg elbow, one 2" nipple and additional nipple to reach outside the cabinet. A semi-rigid connector to the gas piping can be used outside the cabinet per local codes. From the elbow, the length of pipe and the fittings required will vary by the side chosen, location of union and cabinet width. The union may be placed inside or outside of the cabinet.

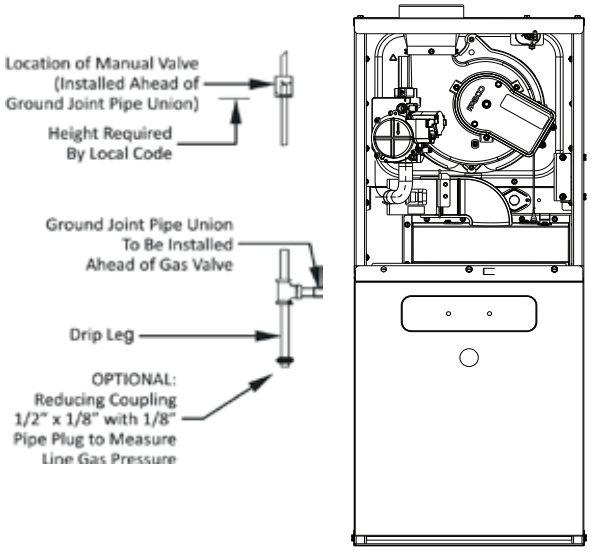


**General Furnace Layout**
**Figure 8**

## Upflow Installations

A ground joint union, drip leg, and manual shutoff valve must also be supplied by the installer. In some cases, the installer may also need to supply a transition piece from 1/2" to another pipe size.

When the gas piping enters through the side of the furnace, the installer must supply the following fittings (starting from the gas valve nipple elbow):

- Straight pipe to reach the exterior of the furnace.
- A ground joint union, drip leg, and manual shutoff valve must also be supplied by the installer.

## Gas Piping Checks

Before placing unit in operation, leak test the unit and gas connections.

**WARNING**

**To avoid the possibility of explosion or fire, never use a match or open flame to test for leaks.**

Check for leaks using an approved chloride-free soap and water solution, an electronic combustible gas detector, or other approved testing methods.

**CAUTION**

**To prevent property damage or personal injury due to fire, the following instructions must be performed regarding gas connections, pressure testing, location of shutoff valve and installation of gas piping.**

**NOTE:** Never exceed specified pressures for testing. Higher pressure may damage the gas valve and cause subsequent overfiring, resulting in heat exchanger failure.

Disconnect this unit and shutoff valve from the gas supply piping system before pressure testing the supply piping system with pressures in excess of 1/2 psig (3.48 kPa).

This unit must be isolated from the gas supply system by closing its manual shutoff valve before pressure testing of gas supply piping system with test pressures equal to or less than 1/2 psig (3.48 kPa).

**WARNING**

**If the gas furnace is installed in a basement, an excavated area or confined space, it is strongly recommended to contact a certified contractor to install a gas detecting warning device in case of a gas leak.**

## *Circulating Air and Filters*

### Ductwork - Air Flow

**WARNING**

**Never allow the products of combustion, including carbon monoxide, to enter the return duct work or circulation air supply.**

Duct systems and register sizes must be properly designed for the CFM and external static pressure rating of the furnace. Ductwork should be designed in accordance with the recommended methods of "Air Conditioning Contractors of America" Manual D.

A duct system must be installed in accordance with Standards of the National Board of Fire Underwriters for the Installation of Air Conditioning, Warm Air Heating and Ventilating Systems. Pamphlets No. 90A and 90B.

A closed return duct system must be used, with the return duct connected to the furnace. **NOTE:** Ductwork must never be attached to the back of the furnace. For installations requiring more than 1800 CFM, use a bottom return or two sided return. Supply and return connections to the furnace may be made with flexible joints to reduce noise transmission. To prevent the blower from interfering with combustion air or draft when a central return is used, a connecting duct must be installed between the unit and the utility room wall. Furnace is shipped with the top flanges in the flat position. Before installing a coil or ducts, the flanges must be bent 90°. A room, closet, or alcove must not be used as a return air chamber.

When the furnace is used in connection with a cooling unit, the furnace should be installed in parallel with or on the upstream side of the cooling unit to avoid condensation in the heating element. With a parallel flow arrangement, the dampers or other means used to control the flow of air must be adequate to prevent chilled air from entering the furnace and, if manually operated, must be equipped with means to prevent operation of either unit unless the damper is in the full heat or cool position.

Damper must be in open position when appliance main burner is operating.

When the furnace is installed without a cooling coil, it is recommended that a removable access panel be provided in the outlet air duct. This opening shall be accessible when the furnace is installed and shall be of such a size that the heat exchanger can be viewed for visual light inspection or such that a sampling probe can be inserted into the airstream. The access panel must be made to prevent air leaks when the furnace is in operation.

NOTE: In a horizontal installation the air conditioning coil must be adequately supported by proper brackets and supports. Inadequate coil support can result in furnace cabinet distortion and air leakage.

When the furnace is heating, the temperature of the return air entering the furnace must be between 55°F and 100°F.

When a furnace is installed so that supply ducts carry air circulated by the furnace to areas outside the space containing the furnace, the return air shall also be handled by a duct sealed to the furnace casing and terminating outside the space containing the furnace.

**WARNING**

**Edges of sheet metal holes may be sharp. Use gloves as a precaution when removing sheet metal from return air openings.**

### Filters - Read This Section Before Installing The Return Air Ductwork

Filters must be used with this furnace. Discuss filter maintenance with the building owner. Filters do not ship with this furnace, but must be provided by the installer. Filters must comply with UL900 or CAN/ULCS111 standards. Damage or repairs due to failure to install filters in the furnace are not covered under the warranty.

**NOTE:** An undersized opening will cause reduced airflow. Refer to the Filter Sizing Chart to determine filter area requirements.

### Upright Installations

Depending on the installation and/or customer preference, differing filter arrangements can be applied. Filters can be installed in the central return register or a side panel external filter rack kit (upflows). As an alternative, a media air filter or electronic air cleaner can be used as the primary filter. The following figure shows possible filter locations.

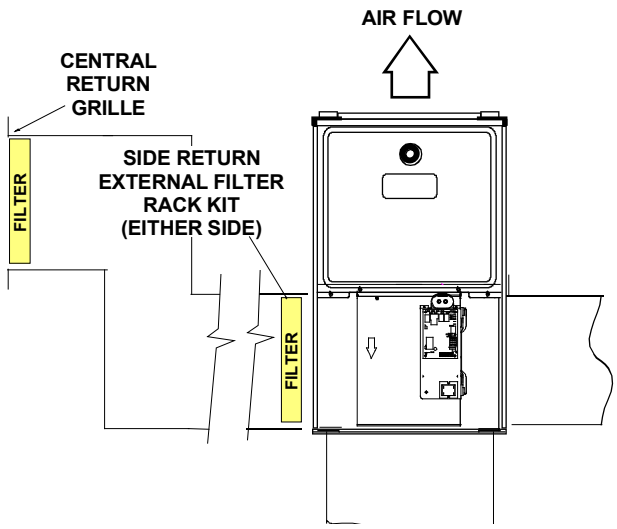


Upright Upflow
**Figure 9**

## Circulation Air Filters

One of the most common causes of a problem in a forced air heating system is a blocked or dirty filter. Circulating air filters must be inspected monthly for dirt accumulation and replaced if necessary. Failure to maintain clean filters can cause premature heat exchanger failure.

A new home may require more frequent replacement until all construction dust and dirt is removed. Circulating air filters are to be installed in the return air duct external to the furnace cabinet.

| Upflow / Horizontal Models | Minimum Recommended Filter Size^ |
|---|---|
| *M9S8000403AU | 1 - 16 X 25 Side or 1 -14 X 24 Bottom Return |
| *M9S800603AU | 1 - 16 X 25 Side or 1 -14 X 24 Bottom Return |
| *M9S800604BU | 1 - 16 X 25 Side or 1 - 16 X 25 Bottom Return |
| *M9S800804BU | 1 - 16 X 25 Side or 1 - 16 X 25 Bottom Return |
| *M9S800805CU | 2 - 16 X 25 Side Return or<br>1 - 20 X 25 Bottom Return |

^Larger filters may be used, filters may also be centrally located

**Table 7**

## Horizontal Installations

Filters must be installed in either the central return register or in the return air duct work.

# *Normal Sequence of Operation*

## Power Up

- 120 VAC power applied to furnace.
- Integrated ignition control performs internal checks.
- Upon power-up of the control board, all Seven segments will be illuminated displaying “8 8 8”. After power-up the displays will show “I d L”, idle, or stand-by mode.
- The control is now ready to receive demands from the room thermostat. Refer to Status Menu in this manual for interpretation of items displayed in the status menu

## Gas Heating Mode

The normal operational sequence in gas heating mode is as follows:

- R and W thermostat contacts close, initiating a call for heat. The control will display heat mode in status menu; - g h
- Integrated control module performs safety circuit checks.
- Induced draft blower is energized for 30 second pre-purge period causing pressure sensor contacts to close.
- Igniter warm up begins after 30 second prepurge expires.
- Gas valve opens at end of igniter warm up period, delivering gas to burners and establishing flame.
- Integrated control module monitors flame presence. Gas valve will remain open only if flame is detected.
- Circulator blower is energized on user selected heat speed following a fixed thirty second blower on delay. Electronic air cleaner and humidifier terminal relays are energized with circulator blower.
- Furnace operates; integrated control module monitors safety circuits continuously.
- R and W thermostat contacts open, completing the call for heat.
- Gas valve closes, extinguishing flame.
- Induced draft blower is de-energized following a thirty second post purge.
- HUM terminal relay is de-energized.
- Circulator blower continues running for selected heat off delay. If required this can be changed in the field.
- Electronic air cleaner is de-energized.
- Furnace awaits the next call from thermostat.

## Cooling Mode

The control board support two stages of cooling. If this furnace is installed with a single stage cooling unit or heat pump, the Y1 terminal of the control board must be used. A Y2 call on the control board will be ignored if a Y1 call is not present.

# *Cooling Mode Sequence of Operation*

**1st Stage Cooling Mode Sequence:**

- On a call for low stage cooling, the Y1 or Y1 and G thermostat contacts close signaling the furnace control board with 24 vac. on Y1 or Y1 and G terminals.
- The 7-Segment will display; 1 A C
- The compressor and condenser fan are energized.
- The circulator fan is energized at low cool speed after the cool on delay period. The electronic air cleaner EAC

relay will close the EAC contacts.

- After the thermostat is satisfied, the compressor is de-energized and the Cool Mode Fan Off Delay period begins.
- Following the Cool Mode Fan Off Delay period, the indoor fan and air cleaner relays are de-energized

**2nd Stage Cooling Mode Sequence:**

**NOTE:** A Y1 call must be present or a Y2 call will be ignored

- On a call for 2nd stage cooling, the Y2 or Y2 and G thermostat contacts close signaling the furnace control board with 24 vac. on Y2 or Y2 and G terminals.
- The 7-Segment will display; 2 A C
- The compressor and condenser fan are energized.
- The circulator fan is energized at cool speed after a cool on delay. The electronic air cleaner EAC relay will close the EAC contacts.
- After the thermostat is satisfied, the compressor is de-energized and the Cool Mode Fan Off Delay period begins.
- Following the Cool Mode Fan Off Delay period, the indoor fan and air cleaner relays are de-energized

## *Heat Pump Mode*

**1st Stage HP Heating Mode Sequence:**

- On a call for low stage HP Heating, the Y1 or Y1 and G thermostat contacts close signaling the furnace control board with 24 vac. on Y1 or Y1 and G terminals.
- The 7-Segment will display; 1 H P
- The compressor and condenser fan are energized.
- The circulator fan is energized at HP1 fan speed after the HP on delay period. The electronic air cleaner, EAC, and humidifier, HUM, relays will close the contacts.
- After the thermostat is satisfied, the compressor is de-energized and the electronic air cleaner EAC and humidifier HUM relays de-energize. The HP Heat Mode Fan Off Delay period begins.
- Following the HP Heat Mode Fan Off Delay period, the indoor fan, EAC, & HUM relays are de-energized.

**2nd Stage HP Heating Mode Sequence:**

**NOTE:** A Y1 call must be present or a Y2 call will be ignored

- On a call for 2nd stage HP Heating, the Y2 or Y2 and G thermostat contacts close signaling the furnace control board with 24 vac. on Y2 or Y2 and G terminals.
- The 7-Segment will display; 2 H P
- The compressor and condenser fan are energized.
- The circulator fan is energized at HP2 fan speed after the HP on delay period. The electronic air cleaner EAC and humidifier HUM relays will close the contacts.
- After the thermostat is satisfied, the compressor is de-energized and the electronic air cleaner EAC and humidifier HUM relays de-energize. The HP Heat Mode Fan Off Delay period begins.
- Following the HP Heat Mode Fan Off Delay period, the indoor fan, EAC, & HUM relays are de-energized.

### Fan Only Mode

The normal operational sequence in fan only mode is as follows:

- R and G thermostat contacts close, initiating a call for fan.
- Integrated control module performs safety circuit checks.
- Circulator blower is energized on user selected fan speed. Electronic air cleaner terminal relay is energized.
- Circulator blower runs, integrated control module monitors safety circuits continuously.
- R and G thermostat contacts open, completing the call for fan.
- Circulator blower is de-energized. Electronic air cleaner terminal relay is de-energized.
- Furnace awaits the next call from thermostat.

### Defrost Mode

Defrost call can only be generated with heat pump outdoor unit properly configured in the OdS menu.

- On a call for Defrost, the Y1 or Y1 with Y2 with/without O contacts and W thermostat contacts close signaling the furnace control board to enter defrost.
- If Y with O and W are present simultaneously, the blower shall be energized at Cooling Speed after COOL on delay, then, switch the blower speed to the Greater of (Cooling Speed or Gas Heat speed) after Gas Heat On Delay expired.
- If Y without O and W are present simultaneously, the blower shall be energized at HP Heat Speed after HP Heat On Delay, then, switch the blower speed to the Greater of (HP Heat Speed or Gas Heat speed) after Gas Heat On Delay expired.
- The 7-Segment will display; d F t
- The electronic air cleaner EAC and humidifier HUM relays will close the contacts.
- After the thermostat is satisfied, the gas valve will de-energize. The Gas Heat Mode Fan Off Delay period begins.
- Following the Gas Heat Mode Fan Off Delay period, the indoor fan, EAC, & HUM relays are de-energized.

## *Start-up Procedure And Adjustment*

Furnace must have a 120 VAC power supply properly connected and grounded. Proper polarity must be maintained for correct operation. An interlock switch prevents furnace operation if the blower door is not in place. Keep the blower

access door in place except for inspection and maintenance.

The integrated furnace control board is equipped with two push-button switches used to access & navigate menus for furnace setup & settings. The 3 x Seven Segment Displays on the control board will show the current selection.

Upon power-up of the control board, all Seven segments will be illuminated displaying “8 8 8”. After power-up the displays will show “I d L”, idle, or stand-by mode. The control is now ready to receive demands from the room thermostat. Refer to Status Menu in this manual for interpretation of items displayed in the status menu

## Quick Start

Initial set up of outdoor systems are required to be configured through the control board. Navigate to OdS menu using the push buttons to properly configure the outdoor system. Selections for AC1, AC2, HP1, HP2 must be made to enable specific fan speeds and thermostat signals to function.

**NOTE:** Equipment type (Single-stage cooling, Two-stage cooling, Single-stage heat pump, Two-stage heat pump) **MUST** be setup through the OdS menu by the installer for proper system operation.

## Using Push-Button Switches

All user settings may be accessed by two push-button switches on the control board. The switches are identified as “menu” & “option”. To enter the main menu, press the “menu” switch. Each time the menu switch is pressed the display will show the next available item in the main menu.

While in the main menu, press the “option” switch to scroll through available options corresponding to the main menu item displayed. In the option menu, the default option will be displayed first. If the default option has been changed to another option, the current option selection will be displayed first.

The option menu will display both adjustable & non-adjustable options. When an adjustable option is displayed, the display will flash continuously until a switch is pressed. If a non-adjustable option is displayed (such as Code Release Number) the display will not flash.

While navigating the option menus, press the menu switch to select the displayed option. The displayed selection will stop flashing indicating the selection was made. Press the menu button again to finalize the selection and return to the corresponding main menu.

In the option menu, after the last option has been displayed, the display will revert to the corresponding main menu & display the default (or selected) option.

If switches are inactive for 30 seconds the display will revert to the status menu.

### Control Board Main Menu

| Description | Main Menu LED Display | Option Menu LED Display | Default |
|---|---|---|---|
| Idle - system awaiting input | i dl | | |
| Display Active Alarm | Er r | chart for alarm code definition | |
| Display Last 6 Faults | L6F | | |
| Code Release Number | Cr | None | |
| Shared Data Revision | Sr | None | |
| Reset to Factory Default | r Fd | Yes / No | |
| Outdoor Setting Menu | OdS | AC1 / AC2 / HP1 / HP2 / OFF | OFF |
| Blower Speed for Continuous Fan Mode | FSd | F01 - F09 | F01 |
| Blower Speed for 1st Stage Compressor Mode | AC1 | F01 - F09 | Model specific |
| Blower Speed for 2nd Stage Compressor Mode | AC2 | F01 - F09 | Model specific |
| Cooling Fan Off Delay | CFd | 0 - 120 seconds | 65 seconds |
| Cooling Fan On Delay | Cnd | 0 - 35 seconds | 7 seconds |
| Blower Speed for Gas Heat Mode | gAF | Allowable speeds Fxx | Model specific |
| Gas Heat Off Delay | gFd | 30 - 120 seconds | 90 seconds |
| Gas Heat On Delay - locked | gnd | None | 30 seconds |
| Blower Speed for 1st Stage HP Heat Mode | HP1 | F01 - F09 | Model specific |
| Blower Speed for 2nd Stage HP Heat Mode | HP2 | F01 - F09 | Model specific |
| HP Heat Off Delay | HFd | 30 - 120 seconds | 60 seconds |
| HP Heat On Delay | Hnd | 5 - 30 seconds | 5 seconds |

### Control Board Status Menu

| LED Display | Description of System Status |
|---|---|
| 888 | All segments illuminated = control powering up |
| I DL | Idle |
| FAn | Constant Fan |
| 1AC | Low Stage Cooling |
| 2AC | High Stage Cooling |
| 1AC | Compressor Heat, Low Stage |
| 2AC | Compressor Heat, High Stage |
| gH | Gas Heat |
| 1HP | Low Stage HP |
| 2HP | High Stage HP |
| dFt | Defrost |

## Furnace operation

Purge gas lines of air prior to start-up. Do not purge lines into an enclosed burner compartment. Follow NFPA 54, National Fuel Gas Code 8.1 for proper purging methods.

Check for leaks using an approved chloride-free soap and water solution, an electronic combustible gas detector, or other approved method.

**NOTE:** An interlock switch prevents furnace operation if the blower door is not in place. Keep the blower access doors in place except for inspection and maintenance.

## Furnace Start-up

1. Close the manual gas shutoff valve external to the furnace.
2. Turn off the electrical power to the furnace.
3. Set the room thermostat to the lowest possible setting.
4. Remove the burner compartment door.

**NOTE:** This furnace is equipped with an ignition device which automatically lights the burner. Do not try to light the burner by hand.

5. *White-Rodgers valves:* Push the switch to the OFF position.
6. Wait five minutes then smell for gas. Be sure to check near the floor, as some types of gas are heavier than air.
7. If gas can be smelled following the five minute waiting period in Step 6, immediately follow the instructions on Page 3 of this manual. If you do not smell gas after five minutes:

   *White-Rodgers valves:* Push the switch to the ON position.
8. Replace the door on the front of the furnace.
9. Open the manual gas valve external to the furnace.
10. Turn on the electrical power supply to the furnace.
11. Adjust the thermostat to a setting above room temperature.
12. After the burners are lit, set the room thermostat to the desired temperature.

**NOTE:** There will be a delay between thermostat energizing and burner firing.

## Furnace Shutdown

1. Set the thermostat to lowest setting. The integrated control will close the gas valve and extinguish flame. Following a 30 second delay, the induced draft blower will be de-energized. The circulation blower will shut down when the time delay expires. Time delay is selectable on all models.
2. Turn off the electrical power supply to the furnace.
3. Remove the burner compartment door.
4. *White-Rodgers valve:* Push switch to the OFF position.
5. Close manual gas shutoff valve external to the furnace.
6. Replace the door on the unit.

## Gas Supply Pressure Measurement

**CAUTION**

**To prevent unreliable operation or equipment damage, the inlet gas supply pressure must be as specified on the unit rating plate with all other household gas fired appliances operating.**

The line pressure supplied to the gas valve must be within the range specified on Table 9. The supply pressure can be measured at the gas valve inlet pressure tap or at a hose fitting installed in the gas piping drip leg. The supply pressure must be measured with the unit OFF. To measure inlet pressure, use the following procedure.

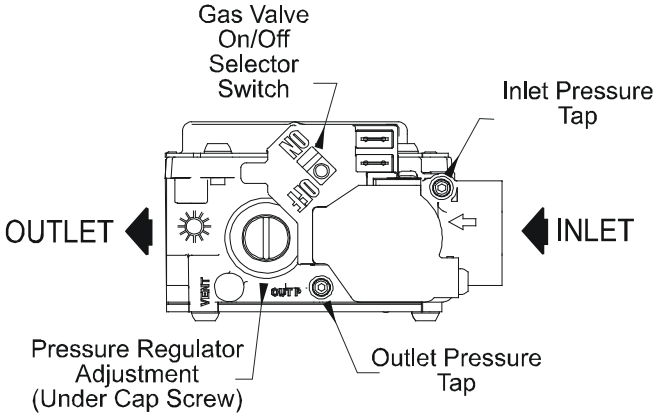


**White-Rodgers Model 36J22Y-204**

**Figure 10**

1. Turn OFF gas to furnace at the manual gas shutoff valve external to the furnace.
2. Turn OFF all electrical power to the system.
3. Inlet pressure tap connections:
   a. White-Rodgers valve:
      Back inlet pressure test screw (inlet pressure tap out one turn (counterclockwise, not more than one turn).
4. Connect calibrated manometer (or appropriate pressure gauge) at either the gas valve inlet pressure tap or the gas piping drip leg. See White-Rodgers 36J22Y-204 gas valve Figure 13 for location of inlet pressure tap.
5. Turn ON the gas supply.
6. Turn On power and operate the furnace and all other gas consuming appliances on the same gas supply line.
7. Using a leak detection solution or soap suds, check for leaks at screw (White-Rodgers valve). Bubbles forming indicate a leak. SHUT OFF GAS AND REPAIR ALL LEAKS IMMEDIATELY!
8. Measure the gas supply pressure with burners firing. Adjust supply pressure using the *Inlet Gas Supply Pressure* table shown below. If supply pressure reading differs from the table, make necessary adjustments to pressure regulator, gas piping size, etc., and/or consult with local gas utility.

| INLET GAS SUPPLY PRESSURE | | |
|---|---|---|
| Natural Gas | Minimum: 4.5" w.c. | Maximum: 10.0" w.c. |

**Table 9**

9. Turn OFF all electrical power and gas supply to the system.
10. Remove the manometer hose from the hose barb fitting or inlet pressure Tap.
11. Replace inlet pressure tap:
    a. White-Rodgers valve:
    Turn inlet pressure test screw in to seal pressure port (clockwise, 7 in-lb minimum).
12. Retest for leaks. If bubbles form, shut down gas and repair leaks immediately.
13. If there are no leaks, turn ON electrical power and gas supply to the system.
14. Turn valve switch ON.

**NOTE:** If measuring gas pressure at the drip leg, a field-supplied hose barb fitting must be installed prior to making the hose connection. If using the inlet pressure Tap on the White-Rodgers gas valve, then use the 36G/J Valve Pressure Check Kit, Goodman Part No. 0151K00000S.

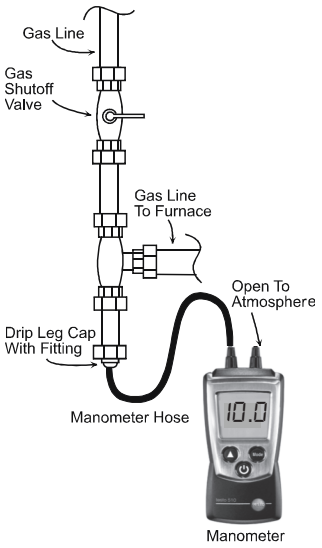


**Measuring Inlet Gas Pressure (Alt. Method)**

**Figure 11**

## Gas Manifold Pressure Measurement and Adjustment

**CAUTION**

**To prevent unreliable operation or equipment damage, the gas manifold pressure must be as specified on the unit rating plate. Only minor adjustments should be made by adjusting the gas valve pressure regulator.**

Only small variations in gas pressure should be made by adjusting the gas valve pressure regulator. The manifold pressure must be measured with the burners operating. To measure and adjust the manifold pressure, use the following procedure.

1. Turn OFF gas to furnace at the manual gas shutoff valve external to the furnace.
2. Turn OFF all electrical power to the system.
3. Outlet pressure tap connections:
    a. White-Rodgers valve:
    Back outlet pressure test screw (outlet pressure Tap) out one turn (counterclockwise, not more than one turn).
4. Connect calibrated manometer (or appropriate pressure gauge) at the gas valve outlet pressure tap. See White-Rodgers 36J22Y-204 gas valve Figure 13 for location of outlet pressure tap.
5. Turn ON the gas supply.
6. Turn ON power and close thermostat “R” and “W” contacts to provide a call for heat.
7. Using a leak detection solution or soap suds, check for leaks at outlet pressure Tap screw (White-Rodgers valve). Bubbles forming indicate a leak. SHUT OFF GAS AND REPAIR ALL LEAKS IMMEDIATELY!
8. Measure the gas manifold pressure with burners firing. Adjust manifold pressure using the following *Manifold Gas Pressure* table.

| Manifold Gas Pressure | |
|---|---|
| Natural Gas | 2.8" - 3.2" w.c. |

**Table 10**

9. Remove regulator cover screw from the outlet pressure regulator and turn screw clockwise to increase pressure or counterclockwise to decrease pressure. Replace regulator cover screw.
10. Turn OFF all electrical power and gas supply to the system.
11. Remove the manometer hose from the hose barb fitting or outlet pressure Tap.
12. Replace outlet pressure tap:
    a. White-Rodgers valve: Turn outlet pressure test screw in to seal pressure port (clockwise, 7 in-lb minimum).
13. Turn ON electrical power and gas supply to the system.
14. Close thermostat contacts to provide a call for heat.
15. Retest for leaks. If bubbles form, SHUT OFF GAS AND REPAIR ALL LEAKS IMMEDIATELY!

## Gas Input Rate Measurement (Natural Gas Only)

The gas input rate to the furnace must never be greater than that specified on the unit rating plate. To measure natural gas input using the gas meter, use the following procedure.

1. Turn OFF the gas supply to all other gas-burning appliances except the furnace.
2. While the furnace is operating at high fire rate, time and record one complete revolution of the gas meter dial, measuring the smallest quantity, usually the dial that indicates 1/2 cu. ft. per revolution. You will use this number to calculate the quantity of gas in cubic ft. if the furnace would consume if it ran steadily for one hour

(3600 seconds).

3. If the 1/2 cu. ft. dial was used, multiply your number X 2. EXAMPLE: If it took 23 seconds to complete one revolution of the 1/2 ft. dial (23 x 2 = 46).

   This tells us that at this rate, it would take 46 seconds to consume one cu. ft. of gas. This tells us that in one hour, the furnace would consume 78 cu. ft. of gas. (3600/46 = 78) The typical value range for 1 cu. ft. of natural gas is around 1025 BTU. Check with your gas utility, if possible. In this example, the furnace is consuming 80,000 BTUH. **NOTE:** The final manifold pressure cannot vary by more than ± 0.2" w.c. for Natural from the specified setting. Consult your local gas supplier if additional input rate adjustment is required.
4. Turn ON gas and relight appliances turned off in step 1. Ensure all the appliances are functioning properly and that all pilot burners (if applicable) are operating.

## Temperature Rise

Air temperature rise is the temperature difference between supply and return air. The proper amount of temperature rise is usually obtained when the unit is operated at the rated input with the "as shipped" blower speed. If the correct amount of temperature rise is not obtained, it may be necessary to change the blower speed.

Temperature rise must be within the range specified on the unit rating plate. An incorrect temperature rise may result in condensing in or overheating of the heat exchanger. An airflow and temperature rise table is provided in the Specification Sheet applicable to your model. Determine and adjust temperature rise as follows:

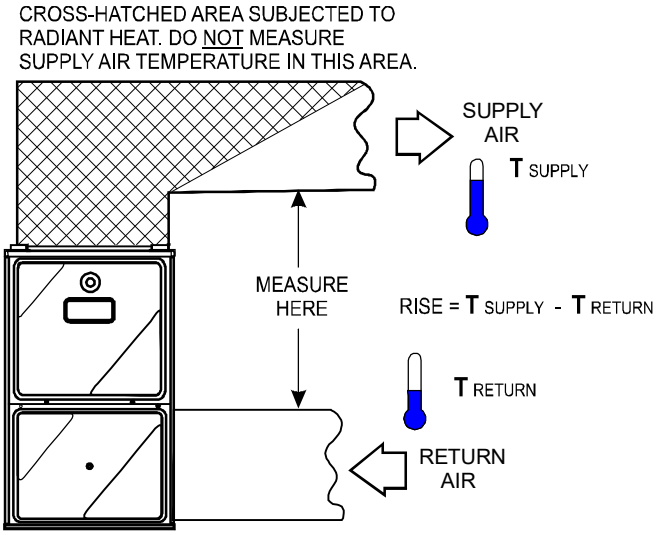


**Temperature Rise Measurement**

**Figure 12**

1. Operate furnace with burners firing approximately 15 minutes. Ensure all registers are open and all duct dampers are in their final (fully or partially open) position.
2. Place thermometers in the return and supply ducts as close to the furnace as possible. Thermometers must not be influenced by radiant heat by being able to "see" the heat exchanger.
3. Subtract the return air temperature from the supply air temperature to determine the air temperature rise. Allow adequate time for thermometer readings to stabilize.
4. Adjust temperature rise by adjusting the circulator blower speed. Increase blower speed to reduce temperature rise. Decrease blower speed to increase temperature rise. Refer to the following section for speed changing details.

## Circulator Blower Speed Adjustment

**WARNING**

**To avoid personal injury or death due to electrical shock, turn OFF power to the furnace before changing speed taps.**

This furnace is equipped with a multi-speed circulator blower. This blower provides ease in adjusting blower speeds. The Specification Sheet applicable to your model provides an airflow table, showing the relationship between airflow (CFM) and external static pressure (E.S.P.), for the proper selection of heating and cooling speeds.

1. Determine the tonnage of the cooling system installed with the furnace. If the cooling capacity is in BTU/hr divide it by 12,000 to convert capacity to tons.

   **Example:** Cooling Capacity of 30,000 BTU/hr.
   30,000/12,000 = 2.5 Tons
2. Determine the proper air flow for the cooling system. Most cooling systems are designed to work with air volume between 350 and 450 CFM per ton. Most manufacturers recommend an air flow of about 400 CFM per ton.

   **Example:** 2.5 tons X 400 CFM per ton = 1000 CFM
3. Select the heating speed for your model from the heating speed chart in the Specification Sheet. The selected speed must provide a temperature rise within the rise range listed with the particular model.

## Continuous Fan Mode Speed Selection

To change the main blower speed in circulation mode, see the following steps:

1. Press menu button until LED displays "FSd". Press option button and LED will display the currently selected speed number as Fxx (xx: Blower speed number from 1 to 9).
2. The control shall cycle through available fan speeds every time the option button is pressed. All 9 speeds are available for circulation.
3. When the menu button is pressed, the current displayed speed shall stop flashing. Press the menu button again to select the option and the control shall immediately apply that blower setting and return to the corresponding main menu.

| THERMOSTAT CALL | AVAILABLE SPEEDS (FSd menu) |
|---|---|
| G | F01 |
| | F02 |
| | F03 |
| | F04 |
| | F05 |
| | F06 |
| | F07 |
| | F08 |
| | F09 |

**Circulation Speed Table**

## Cooling Mode Speed Selection

To change the main blower speed in COOLING mode, follow the following steps:

**NOTE:** If Heat Pump system is configured in OdS menu (HP1 or HP2) COOLING thermostat calls will include “Y1”/Y2” + “O” terminals energized.

1. Press menu button until LED displays “AC1“(for single stage COOLING) or “AC2 “(for Two stage COOLING). Press option button and the LED will display the currently selected speed number as Fxx (xx: Blower speed number from 1 to 9).
2. The control shall cycle through available fan speeds every time the option button is pressed. All 9 speeds are available for both Single and Two Stage cooling.
3. When the menu button is pressed, the current displayed speed shall stop flashing. Press the menu button again to select the option and the control shall immediately apply that blower setting and return to the corresponding main menu.

| THERMOSTAT CALL (OdS: Terminal) | AVAILABLE SPEEDS (AC1 menu) |
|---|---|
| 1AC: Y1<br>1HP: Y1 + O | F01 |
| | F02 |
| | F03 |
| | F04 |
| | F05 |
| | F06 |
| | F07 |
| | F08 |
| | F09 |

**Single Stage Cooling Speed Table**

| THERMOSTAT CALL (OdS: Terminal) | AVAILABLE SPEEDS (AC2 menu) |
|---|---|
| 2AC: Y1 + Y2<br>2HP: Y1 + Y2 + O | F01 |
| | F02 |
| | F03 |
| | F04 |
| | F05 |
| | F06 |
| | F07 |
| | F08 |
| | F09 |

**Two Stage Cooling Speed Table**

## Gas Heating Mode Speed Selection

To change the main blower speed in GAS HEATING mode, see the following steps:

1. Press menu button until LED displays “gAF. Press option button and LED will display the currently selected fan speed as Fxx (xx: Blower speed number).
2. The control shall cycle through available speed number every time the option button is pressed.
3. When the menu button is pressed, the current displayed speed shall stop flashing. Press the menu button again to select the option and the control shall immediately apply that blower setting and return to the corresponding main menu.

**NOTE:** Each furnace model contains different allowable gas heating speeds. Allowable gas heating speeds will be visible within gAF fan speed menu.

## Heat Pump Heating Mode Speed Selection

To change the main blower speed in Heat Pump HEATING mode, follow the following steps:

1. Press menu button until LED displays “HP1“ (for single stage HP HEATING) or “HP2 “(for Two stage HP HEATING). Press option button and the LED will display the currently selected speed number as Fxx (xx: Blower speed number from 1 to 9).
2. The control shall cycle through available fan speeds every time the option button is pressed. All 9 speeds are available for both Single and Two Stage HP HEATING.
3. When the menu button is pressed, the current displayed speed shall be selected, and control shall apply the newly selected speed in next HP HEATING call.

| THERMOSTAT CALL (OdS: Terminal) | AVAILABLE SPEEDS (HP1 menu) |
|---|---|
| 1HP: Y1 | F01 |
| | F02 |
| | F03 |
| | F04 |
| | F05 |
| | F06 |
| | F07 |
| | F08 |
| | F09 |

**Single Stage HP Heating Speed Table**

| THERMOSTAT CALL (OdS: Terminal) | AVAILABLE SPEEDS (HP2 menu) |
|---|---|
| 2HP: Y1 + Y2 | F01 |
| | F02 |
| | F03 |
| | F04 |
| | F05 |
| | F06 |
| | F07 |
| | F08 |
| | F09 |

**Two Stage HP Heating Speed Table**

## Circulator Blower Fan Timing Adjustment

**NOTE:** Items in this section refer to the **air circulator blower fan**, NOT to the induced draft blower. The induced draft blower timing sequence is not adjustable.

The integrated control module on all models provides selectable fan on/off delay adjustments.

## On/Off Fan Delay Selection

To change the fan on or off delay for COOLING, HP HEATING & GAS HEATING modes, see the following steps:

1. Press menu button until LED displays the desired on/off setting (See MAIN MENU section for selectable blower on/off delay options). Press option button and LED will display the selected on/off delay time in seconds.
2. The control shall cycle through available on/off delay times every time the option button is pressed.
3. When the menu button is pressed, the current displayed on/off delay shall stop flashing. Press the menu button again to select the option and the control shall immediately apply that delay setting and return to the corresponding main menu.

# Operational Checks

**WARNING**

**To avoid personal injury or death, do not remove any internal compartment covers or attempt any adjustment. Electrical components are contained in both compartments. Contact a qualified service agent at once if an abnormal operation should develop.**

## Checking Duct Static

Refer to your furnace rating plate for the maximum ESP (external duct static) rating.

Total external static refers to everything external to the furnace cabinet. Cooling coils, filters, ducts, grilles, registers must all be considered when reading your total external static pressure. The supply duct pressure must be read between the furnace and the cooling coil. This reading is usually taken by removing the “A” shaped block off plate from the end on the coil; drilling a test hole in it and reinstalling the block off plate. Take a duct static reading at the test hole. Tape up the test hole after your test is complete. The negative pressure must be read between the filter and the furnace blower.

Too much external static pressure will result in insufficient air that can cause excessive temperature rise. This can cause limit switch tripping and heat exchanger failure.

To determine total external duct static pressure, proceed as follows;

1. With clean filters in the furnace, use a manometer to measure the static pressure of the return duct at the inlet of the furnace. (Negative Pressure)
2. Measure the static pressure of the supply duct. (Positive Pressure)
3. The difference between the two numbers is .4” w.c.

   Example:
   static reading from return duct = -.1” w.c.
   static reading from supply duct = .3” w.c.
   total external static pressure on this system = .4” w.c.

**NOTE:** Both readings may be taken simultaneously and read directly on the manometer if so desired. If an air conditioner coil or Electronic Air Cleaner is used in conjunction with the furnace, the readings must also include theses components, as shown in the following drawing.

4. Consult proper tables for the quantity of air.

If the total external static pressure exceeds the maximum listed on the furnace rating plate, check for closed dampers, registers, undersized and/or oversized poorly laid out duct work. The temperature rise of the furnace must be within the temperature rise range listed on the furnace rating plate.

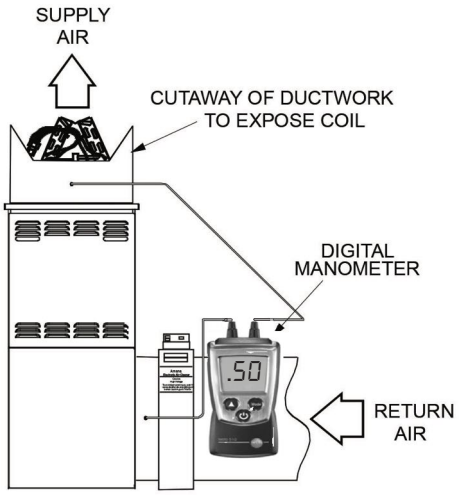


**Checking Static Pressure**
**(80% Furnace Shown)**
**Figure 13**

## *Safety Circuit Description*

### General

**WARNING**

**To avoid personal injury or death, do not remove any internal compartment covers or attempt any adjustment. Electrical components are contained in both compartments. Contact a qualified service agent at once if an abnormal operation should develop.**

**WARNING**

**DO NOT BYPASS SAFETY DEVICES**

A number of safety circuits are employed to ensure safe and proper furnace operation. These circuits serve to control any potential safety hazards and serve as inputs in the monitoring and diagnosis of abnormal function. These circuits are continuously monitored during furnace operation by the integrated control module.

### Integrated Control Module

The integrated control module is an electronic device which controls all furnace operations. Responding to the thermostat, the module initiates and controls normal furnace operation, and monitors and addresses all safety circuits. If a potential safety concern is detected, the module will take the necessary precautions and provide diagnostic information through an LED.

### Primary Limit

The primary limit control is located on the partition panel and monitors heat exchanger compartment temperatures. It is a normally closed (electrically), automatic reset, temperature activated sensor. The limit guards against the overheating resulting from insufficient air passing over the heat exchanger.

### Auxiliary Limit

The auxiliary limit control is located either on or near the circulator blower and monitors heat exchanger compartment temperatures. The control is a normally closed (electrically), automatic reset, temperature activated sensor. It guards against overheating resulting from insufficient air passing over the heat exchanger. The auxiliary limit control is suitable for both horizontal right and horizontal left installations. Regardless of airflow direction, it does not need to be relocated.

### Burner Temperature Switch

The burner temperature switch is mounted on the burner assembly to monitor the burner box temperature. It is normally closed (electrically), auto-reset sensor. This switch guards agianst the burner flames not being properly drawn into the heat exchanger.

### Pressure Sensor

The pressure sensor is mounted near induced draft blower. Its function is to regulate the induced draft blower's speed in order to maintain proper air-fuel ratio for clean and reliable combustion. The pressure sensor also guards agianst insufficient airflow (combustion air and flue products) through the heat exchanger.

### Flame Sensor

The flame sensor is a probe mounted near the burner assembly which uses the principle of flame rectification to determine the presence or absence of flame.

## *Troubleshooting*

### Diagnostic Chart

Refer to the troubleshooting chart in the Appendix for assistance in determining the source of unit operational problems. The 3 digit diagnostic display provides alarm codes to assist in troubleshooting the unit.

### Fault Code Retrieval

The ignition control is equipped with push buttons that can be used to the last five faults detected by the control. Navigate the L6F by pressing the menu button 2 times, then select the option button.

### Clear Fault Memory

To clear all alarm codes, navigate to the last six faults menu, L6F, and hold the option button down for 5 seconds.

### Resetting From Lockout

Furnace lockout results when a furnace is unable to achieve ignition after three attempts. It is characterized by a non-functioning furnace and a fault code will be displayed . If the furnace is in "lockout", it will (or can be) reset in any of the following ways.

1. Automatic reset. The integrated control module will automatically reset itself and attempt to resume normal operations following a one hour lockout period.
2. Manual power interruption. Interrupt 120 volt power to the furnace.

**NOTE:** If the condition which originally caused the lockout still exists, the control will return to lockout. Refer to the Diagnostic Chart for aid in determining the cause.

## Maintenance

**WARNING**

**To avoid electrical shock, injury or death, disconnect electrical power before performing any service or maintenance. Only qualified servicer should service or perform maintenance**

### Annual inspection

The furnace should be inspected by a qualified installer, or service agency at least once per year. This check should be performed at the beginning of the heating season. This will ensure that all furnace components are in proper working order and that the heating system functions appropriately. Pay particular attention to the following items. Repair or service as necessary.

- Flue pipe system: Check for blockage and/or leakage. Check the outside termination and the connections at and internal to the furnace.
- Heat exchanger: Check for corrosion and/or buildup within the heat exchanger passageways.
- Burners: Check for proper ignition, and flame sense.
- Wiring: Check electrical connections for tightness and/or corrosion. Check wires for damage.
- Filters: Check filters and determine if any need to be replaced.

### Filters

**WARNING**

**To avoid property damage, personal injury or death, disconnect electrical power before removing filters. Never operate furnace without a filter installed because dust and lint will build up on internal parts resulting in loss of efficiency, equipment damage and possible fire.**

A return air filter is not supplied with this furnace; however, there must be a means of filtering all of the return air. The installer will supply filter(s) at the time of installation.

### Induced Draft and Circulator Blower Motors

The bearings in the induced draft blower and circulator blower motors are permanently lubricated by the manufacturer. No further lubrication is required. Check motor windings for accumulation of dust which may cause overheating. Clean as necessary.

### Flame Sensor (Qualified Servicer Only)

Under some conditions, the fuel or air supply can create a nearly invisible coating on the flame sensor. This coating acts as an insulator causing a drop in the flame sense signal. If the flame sense signal drops too low the furnace will not sense flame and will lock out. The flame sensor should be carefully cleaned by a qualified servicer using steel wool. The flame sense signal should be 1 to 3 microamps.

### Igniter (Qualified Servicer Only)

At room temperature, the igniter ohm reading should be from 20 - 100 ohms.

### Burner

**WARNING**

**To prevent personal injury or death, do not remove any internal compartment covers or attempt any adjustment. Electrical components are contained in both compartments. Contact a qualified service agent at once if an abnormal operation should develop.**

The Ultra low NOx furnace uses a premix burner. The burner box is sealed to achieve safe and reliable operation.

## Cleaning (Qualified Servicer Only)

1. Shut off electric power and gas supply to the furnace.
2. Disconnect the rollout limit wires, flame sensor wire, and disconnect the igniter plug.

**CAUTION**

**Label all wires prior to disconnection when servicing controls. Wiring errors can cause improper and dangerous operation. Verify proper operation after servicing.**

3. Do not remove burner or other components.
4. Clean cabinet and around the inducer blower, moter and burner box.
5. Reconnect wiring.
6. Turn on electric power and gas supply to the furnace.
7. Check furnace for proper operation. Refer to *"Operational Checks"* section to verify burner flame characteristics.

## Before Leaving an Installation

- Cycle the furnace with the thermostat at least three times. Verify cooling and fan only operation.
- Review the Owner's Manual with the homeowner and discuss proper furnace operation and maintenance.
- Leave literature packet near furnace.

## Repair and Replacement Parts

- When ordering any of the listed functional parts, be sure to provide the furnace model, manufacturing, and serial numbers with the order.
- Although only functional parts are shown in the parts list, all sheet metal parts, doors, etc. may be ordered by description.
- Parts are available from your distributor.

Functional Parts List-

| | |
|---|---|
| Gas Valve | Blower/Collector Box Gasket |
| Natural Gas Orifice | Primary Limit Switch |
| Burner Assembly | Burner Temperature Switch |
| Hot Surface Igniter | Auxiliary Limit Switch |
| Flame Sensor | Heat Exchanger |
| Gas Manifold | Door Switch |
| Ignition Control | Transformer |
| Blower Mounting Bracket | Blower Wheel |
| Pressure Sensor | Blower Housing |
| Pressure Sensor Hose | Blower Cutoff |
| Induced Draft Blower | Blower Motor |
| Integrated Control Module | Motor Mount Bracket |
| Burner Box Gasket | |

# Component ID

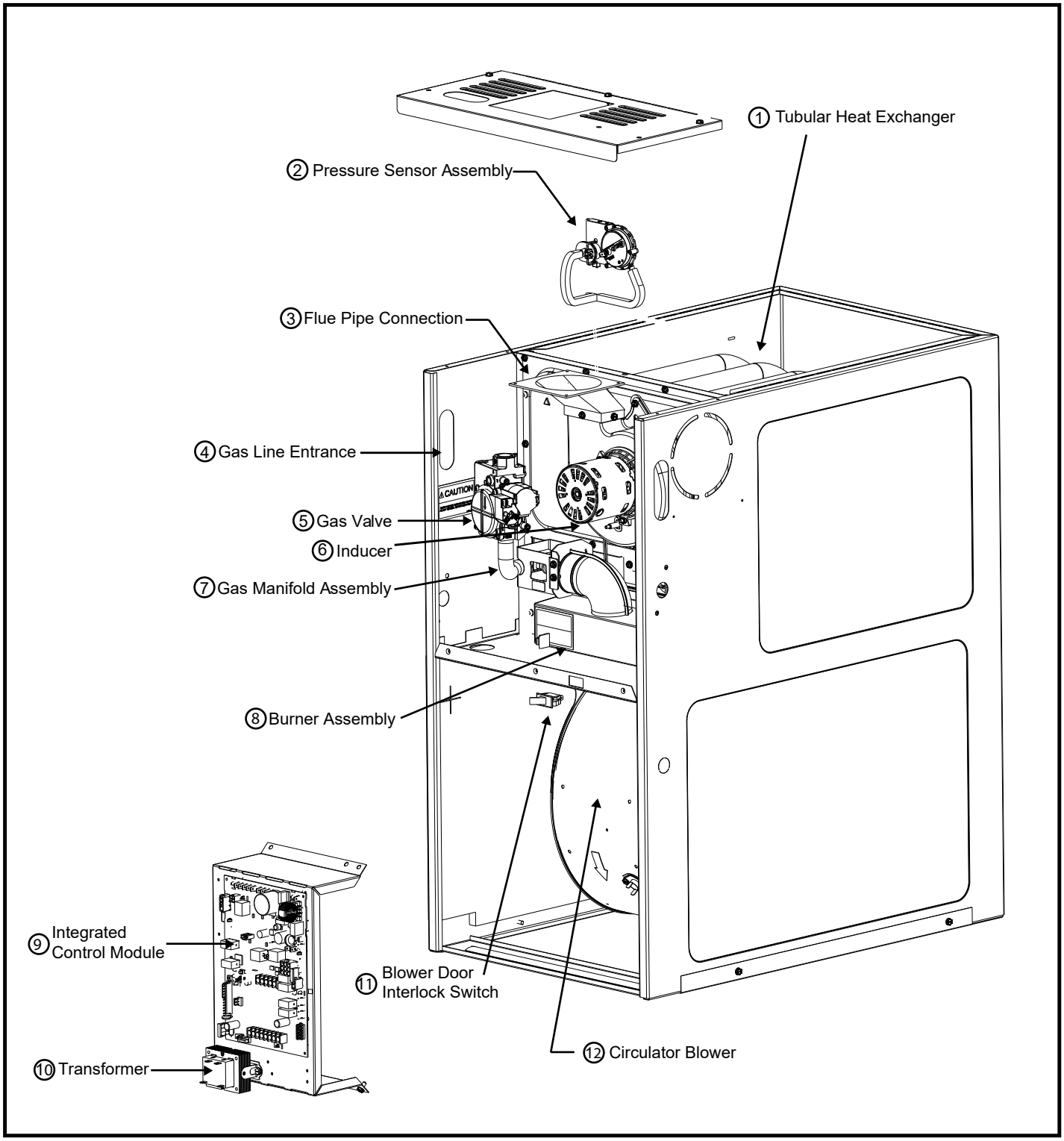


1 Tubular Heat Exchanger
2 Pressure Switch
3 Flue Pipe Connection
4 Gas Line Entrance
5 Gas Valve
6 Inducer
7 Gas Manifold Assembly
8 Burner Assembly
9 Integrated Control Module
10 Transformer
11 Blower Door Interlock Switch
12 Circulator Blower

# Troubleshooting Chart

| Symptom | LED Status | Fault Description | Corrective Actions |
|---|---|---|---|
| Normal Operation | I dL | Stand-by Mode. Normal Operation | None |
| Furnace Fails to Operate | EEE | Internal Control fault | Replace control board |
| Furnace fails to operate | EE0 | Furnace lockout due to an excessive number of ignition “retries” (3 total)<br>Failure to establish flame<br>Loss of flame after establishment | Locate and correct gas interruption<br>Replace or realign igniter<br>Check flame sense signal, clean sensor if coated or oxidized<br>Check flue piping for blockage, proper length, elbows, and termination<br>Verify proper induced draft blower performance |
| Furnace fails to operate | EE1 | Draft Inducer pressure switch circuit is closed at start of heating cycle<br>Draft Inducer pressure switch contacts sticking<br>Short in pressure switch circuit wiring | Replace Draft Inducer pressure switch. Repair short in wiring |
| Induced draft blower runs continuously with no furnace operation | EE2 | Draft Inducer pressure switch circuit is not closed<br>Pressure switch hose blocked pinched, or connected improperly<br>Blocked flue and/or inlet air or weak induced draft blower<br>Incorrect pressure switch set point or malfunctioning switch contacts<br>Loose or improperly connected wiring | Inspect pressure switch hose, repair/replace if necessary<br>Inspect flue and/or inlet air for blockage, proper length, elbows, and termination<br>Check induced draft blower performance, correct as necessary<br>Check pressure switch operation, replace as needed<br>Tighten or correct wiring connection |
| Circulator blower runs continuously<br>No furnace operation | EE3 | Primary limit circuit is open<br>Insufficient conditioned air over the heat exchanger<br>Blocked filters, restrictive ductwork, improper circulator blower speed, or failed circulator blower motor<br>Loose or improperly connected wiring in high limit circuit | Check filters and ductwork for blockage Clean filters or remove obstruction<br>Check circulator blower speed and performance<br>Correct speed or replace blower motor if necessary<br>Tighten or correct wiring connection |
| Induced draft blower and circulator blower runs continuously<br>No furnace operation | EE4 | Flame sensed with no call for heat<br>Short to ground in flame sense circuit<br>Lingering burner flame Slow closing gas valve | Correct short at flame sensor or in flame sensor wiring<br>Check for lingering or lazy flame Verify proper operation of gas valve |
| No furnace operation | EE5 | Open fuse<br>Short in low voltage wiring | Replace fuse<br>Locate and correct short in low voltage wiring |
| Furnace Operates but shows weak flame signal fault | EE6 | Flame sense micro amp signal is minimal<br>Flame sensor is coated/oxidized<br>Flame sensor incorrectly positioned in burner fame<br>Lazy burner flame due to improper gas pressure or combustion air | Clean flame sensor if coated or oxidized Inspect for proper flame sensor alignment<br>Check inlet air for blockage<br>Compare current gas pressure to rating plate and adjust as needed |
| Furnace fails to operate | EE7 | Problem with igniter circuit<br>Improperly connected or shorted igniter<br>Poor unit ground<br>Igniter relay fault on integrated control module | Check and correct wiring from integrated control module to igniter<br>Diagnose and replace shorted igniter as needed Verify and correct unit ground wiring if needed<br>Check igniter output from control, replace if necessary |

# Troubleshooting Chart

| Symptom | LED Status | Fault Description | Corrective Actions |
|---|---|---|---|
| Furnace fails to operate | EEA | Polarity of 115 volt AC is reversed<br>Poor unit ground | Correct polarity, check and correct wiring if necessary<br>Verify proper ground, correct if necessary |
| Furnace fails to operate | EEb | Gas valve is energized when it should not be<br>Internal gas valve error | Check wiring in gas valve circuit<br>Replace integrated control board |
| Furnace fails to operate | EEC | Gas valve is not energized when it should be<br>External Gas Valve Error | Check wiring in gas valve circuit<br>Replace integrated control board |
| Furnace fails to operate | EEd | Auxiliary limit switch (blower compartment) circuit is open | Furnace power was turned off during heat cycle.<br>Blower not operating during heat<br>Faulty aux limit or wiring |
| Furnace fails to operate | E10 | Grounding Error | Check grounding |
| Furnace fails to operate | E11 | Burner limit switch circuit is open | Check and correct gas supply pressure<br>Check flue and air inlet for blockage, proper length, elbows, and termination<br>Check wiring connection in limit circuit<br>Check burner temperature switch. Replace if necessary |
| Furnace fails to operate | E12 | Redundant relay open alarm | Replace integrated control board |
| Furnace fails to operate | E13 | Redundant relay stuck closed alarm | Replace integrated control board |
| Furnace fails to operate | EbF | Inducer communication alarm | Check Red, Black, White harness & connections to inducer & control board |
| Furnace fails to operate | E1b | APS reference error | Check Red, Black, Green harness & connections to pressure sensor & control board<br>Replace pressure sensor |
| Furnace fails to operate | E1C | APS null error | Check Red, Black, Green harness & connections to pressure sensor & control board<br>Check pressure hoses to pressure sensor and pressure switch |
| Furnace fails to operate | E1d | APS span error | Check Red, Black, Green harness & connections to pressure sensor & control board<br>Check pressure hoses to pressure sensor and pressure switch |
| Furnace fails to operate | E1E | APS pressure error | Check Red, Black, Green harness & connections to pressure sensor & control board<br>Replace pressure sensor |
| Furnace fails to operate | E1F | APS input error | Check Red, Black, Green harness & connections to pressure sensor & control board<br>Replace pressure sensor |
| | EEH | Twinning error | |
| Furnace fails to operate | EbL | Low circulator current | Check motor 120V line wire is connected to terminal inside current transformer loop<br>Check wire connections to motor and PCB |
| Furnace fails to operate | EbU | Circulator current unexpected | Check motor 120V line wire is connected to terminal inside current transformer loop |
| Furnace fails to operate | EdO | No shared data | Populate shared data set using memory card |

# Blower Performance Data

| GM9S80-U COOLING AIFLOW | | | | | | | | | | |
|---|---|---|---|---|---|---|---|---|---|---|
| MODEL | THERMOSTAT CALL | TAP # | EXTERNAL STATIC PRESSURE, (INCHES WATER COLUMN) | | | | | | | |
| | | | 0.1 | 0.2 | 0.3 | 0.4 | 0.5 | 0.6 | 0.7 | 0.8 |
| | | | CFM | CFM | CFM | CFM | CFM | CFM | CFM | CFM |
| GM9S800403AU* | Y1/Y2 | SP1 | 590 | 540 | 483 | 429 | 369 | 311 | 247 | 203 |
| | | SP2 | 690 | 643 | 597 | 547 | 498 | 443 | 389 | 343 |
| | | SP3 | 750 | 702 | 660 | 618 | 572 | 525 | 477 | 421 |
| | | SP4 | 876 | 832 | 794 | 758 | 716 | 678 | 641 | 598 |
| | | SP5 | 927 | 881 | 841 | 806 | 771 | 734 | 698 | 662 |
| | | SP6 | 1058 | 1015 | 976 | 945 | 915 | 881 | 849 | 818 |
| | | SP7 | 1116 | 1071 | 1036 | 1003 | 975 | 943 | 919 | 884 |
| | | SP8 | 1238 | 1192 | 1158 | 1124 | 1098 | 1070 | 1044 | 1016 |
| | | SP9 | 1398 | 1357 | 1320 | 1293 | 1269 | 1239 | 1216 | 1194 |
| GM9S800603AU* | Y1/Y2 | SP1 | 587 | 542 | 490 | 437 | 382 | 318 | 266 | 207 |
| | | SP2 | 685 | 638 | 590 | 543 | 498 | 448 | 392 | 339 |
| | | SP3 | 856 | 814 | 774 | 732 | 693 | 657 | 622 | 581 |
| | | SP4 | 937 | 892 | 855 | 819 | 786 | 752 | 715 | 684 |
| | | SP5 | 1060 | 1017 | 981 | 950 | 921 | 886 | 856 | 828 |
| | | SP6 | 1108 | 1068 | 1033 | 1003 | 972 | 942 | 914 | 882 |
| | | SP7 | 1274 | 1233 | 1203 | 1174 | 1146 | 1118 | 1089 | 1065 |
| | | SP8 | 1374 | 1340 | 1306 | 1278 | 1254 | 1227 | 1201 | 1179 |
| | | SP9 | 1437 | 1395 | 1362 | 1332 | 1305 | 1278 | 1253 | 1228 |
| GM9S800604BU* | Y1/Y2 | SP1 | 836 | 774 | 711 | 655 | 596 | 523 | 456 | 397 |
| | | SP2 | 1274 | 1228 | 1188 | 1147 | 1107 | 1064 | 1027 | 990 |
| | | SP3 | 1295 | 1256 | 1214 | 1181 | 1140 | 1100 | 1062 | 1024 |
| | | SP4 | 1385 | 1337 | 1301 | 1260 | 1222 | 1186 | 1149 | 1114 |
| | | SP5 | 1454 | 1407 | 1372 | 1353 | 1325 | 1291 | 1255 | 1219 |
| | | SP6 | 1528 | 1485 | 1438 | 1409 | 1383 | 1349 | 1317 | 1285 |
| | | SP7 | 1619 | 1579 | 1551 | 1523 | 1495 | 1463 | 1430 | 1402 |
| | | SP8 | 1746 | 1697 | 1667 | 1642 | 1617 | 1593 | 1570 | 1540 |
| | | SP9 | 1772 | 1735 | 1698 | 1674 | 1645 | 1622 | 1598 | 1574 |
| GM9S800804BU* | Y1/Y2 | SP1 | 722 | 658 | 599 | 534 | 458 | 386 | 330 | 268 |
| | | SP2 | 1270 | 1223 | 1179 | 1139 | 1105 | 1066 | 1029 | 996 |
| | | SP3 | 1304 | 1254 | 1212 | 1173 | 1135 | 1104 | 1069 | 1032 |
| | | SP4 | 1367 | 1318 | 1277 | 1236 | 1199 | 1169 | 1135 | 1102 |
| | | SP5 | 1473 | 1429 | 1386 | 1355 | 1320 | 1289 | 1258 | 1224 |
| | | SP6 | 1560 | 1518 | 1476 | 1441 | 1409 | 1382 | 1350 | 1321 |
| | | SP7 | 1647 | 1605 | 1562 | 1531 | 1497 | 1467 | 1440 | 1408 |
| | | SP8 | 1720 | 1710 | 1674 | 1642 | 1611 | 1581 | 1553 | 1527 |
| | | SP9 | 1796 | 1759 | 1721 | 1687 | 1655 | 1628 | 1604 | 1578 |
| GM9S800805CU* | Y1/Y2 | SP1 | 1280 | 1228 | 1178 | 1134 | 1086 | 1036 | 986 | 936 |
| | | SP2 | 1401 | 1356 | 1313 | 1273 | 1234 | 1190 | 1145 | 1099 |
| | | SP3 | 1593 | 1550 | 1512 | 1475 | 1436 | 1399 | 1360 | 1319 |
| | | SP4 | 1706 | 1662 | 1621 | 1586 | 1550 | 1515 | 1479 | 1444 |
| | | SP5 | 1821 | 1775 | 1736 | 1703 | 1669 | 1636 | 1605 | 1576 |
| | | SP6 | 1836 | 1793 | 1757 | 1721 | 1689 | 1659 | 1628 | 1592 |
| | | SP7 | 1932 | 1888 | 1855 | 1825 | 1794 | 1762 | 1733 | 1701 |
| | | SP8 | 2184 | 2143 | 2110 | 2072 | 2048 | 2017 | 1989 | 1959 |
| | | SP9 | 2221 | 2178 | 2145 | 2109 | 2082 | 2053 | 2025 | 1992 |

# Blower Performance Data

| GM9S80 HEATING AIFLOW | | | | | | | | | | | | | | | | |
|---|---|---|---|---|---|---|---|---|---|---|---|---|---|---|---|---|
| MODEL | THERMOSTAT CALL | TAP # | EXTERNAL STATIC PRESSURE, (INCHES WATER COLUMN) | | | | | | | | | | | | | TEMP RANGE |
| | | | 0.1 | | 0.2 | | 0.3 | | 0.4 | | 0.5 | | 0.6 | 0.7 | 0.8 | |
| | | | CFM | RISE | CFM | RISE | CFM | RISE | CFM | RISE | CFM | RISE | CFM | CFM | CFM | |
| GM9S800403AU* | W/W1 | SP1 | 590 | 50 | 540 | 55 | 483 | N/A | 429 | N/A | 369 | N/A | 311 | 247 | 203 | 25 - 55 |
| | | SP2 | 690 | 43 | 643 | 46 | 597 | 50 | 547 | 54 | 498 | N/A | 443 | 389 | 343 | |
| | | SP3 | 750 | 39 | 702 | 42 | 660 | 45 | 618 | 48 | 572 | 52 | 525 | 477 | 421 | |
| | | SP4 | 876 | 34 | 832 | 36 | 794 | 37 | 758 | 39 | 716 | 41 | 678 | 641 | 598 | |
| | | SP5 | 927 | 32 | 881 | 34 | 841 | 35 | 806 | 37 | 771 | 38 | 734 | 698 | 662 | |
| | | SP6 | 1058 | 28 | 1015 | 29 | 976 | 30 | 945 | 31 | 915 | 32 | 881 | 849 | 818 | |
| | | SP7 | 1116 | 27 | 1071 | 28 | 1036 | 29 | 1003 | 30 | 975 | 30 | 943 | 919 | 884 | |
| | | SP8 | 1238 | N/A | 1192 | 25 | 1158 | 26 | 1124 | 26 | 1098 | 27 | 1070 | 1044 | 1016 | |
| | | SP9 | 1398 | N/A | 1357 | N/A | 1320 | N/A | 1293 | N/A | 1269 | N/A | 1239 | 1216 | 1194 | |
| GM9S800603AU* | W/W1 | SP1 | 587 | N/A | 542 | N/A | 490 | N/A | 437 | N/A | 382 | N/A | 318 | 266 | 207 | 20 - 50 |
| | | SP2 | 685 | N/A | 638 | N/A | 590 | N/A | 543 | N/A | 498 | N/A | 448 | 392 | 339 | |
| | | SP3 | 856 | N/A | 814 | N/A | 774 | N/A | 732 | N/A | 693 | N/A | 657 | 622 | 581 | |
| | | SP4 | 937 | 47 | 892 | 50 | 855 | N/A | 819 | N/A | 786 | N/A | 752 | 715 | 684 | |
| | | SP5 | 1060 | 42 | 1017 | 44 | 981 | 45 | 950 | 47 | 921 | 48 | 886 | 856 | 828 | |
| | | SP6 | 1108 | 40 | 1068 | 42 | 1033 | 43 | 1003 | 44 | 972 | 46 | 942 | 914 | 882 | |
| | | SP7 | 1274 | 35 | 1233 | 36 | 1203 | 37 | 1174 | 38 | 1146 | 39 | 1118 | 1089 | 1065 | |
| | | SP8 | 1374 | 32 | 1340 | 33 | 1306 | 34 | 1278 | 35 | 1254 | 35 | 1227 | 1201 | 1179 | |
| | | SP9 | 1437 | 31 | 1395 | 32 | 1362 | 33 | 1332 | 33 | 1305 | 34 | 1278 | 1253 | 1228 | |
| GM9S800604AU* | W/W1 | SP1 | 836 | N/A | 774 | N/A | 711 | N/A | 655 | N/A | 596 | N/A | 523 | 456 | 397 | 20 - 50 |
| | | SP2 | 1274 | 35 | 1228 | 36 | 1188 | 37 | 1147 | 39 | 1107 | 40 | 1064 | 1027 | 990 | |
| | | SP3 | 1295 | 34 | 1256 | 35 | 1214 | 37 | 1181 | 38 | 1140 | 39 | 1100 | 1062 | 1024 | |
| | | SP4 | 1385 | 32 | 1337 | 33 | 1301 | 34 | 1260 | 35 | 1222 | 36 | 1186 | 1149 | 1114 | |
| | | SP5 | 1454 | 31 | 1407 | 32 | 1372 | 32 | 1353 | 33 | 1325 | 34 | 1291 | 1255 | 1219 | |
| | | SP6 | 1528 | 29 | 1485 | 30 | 1438 | 31 | 1409 | 32 | 1383 | 32 | 1349 | 1317 | 1285 | |
| | | SP7 | 1619 | 27 | 1579 | 28 | 1551 | 29 | 1523 | 29 | 1495 | 30 | 1463 | 1430 | 1402 | |
| | | SP8 | 1746 | 25 | 1697 | 26 | 1667 | 27 | 1642 | 27 | 1617 | 27 | 1593 | 1570 | 1540 | |
| | | SP9 | 1772 | 25 | 1735 | 26 | 1698 | 26 | 1674 | 27 | 1645 | 27 | 1622 | 1598 | 1574 | |
| GM9S800804BU* | W/W1 | SP1 | 722 | N/A | 658 | N/A | 599 | N/A | 534 | N/A | 458 | N/A | 386 | 330 | 268 | 35 - 65 |
| | | SP2 | 1270 | 47 | 1223 | 48 | 1179 | 50 | 1139 | 52 | 1105 | 54 | 1066 | 1029 | 996 | |
| | | SP3 | 1304 | 45 | 1254 | 47 | 1212 | 49 | 1173 | 51 | 1135 | 52 | 1104 | 1069 | 1032 | |
| | | SP4 | 1367 | 43 | 1318 | 45 | 1277 | 46 | 1236 | 48 | 1199 | 49 | 1169 | 1135 | 1102 | |
| | | SP5 | 1473 | 40 | 1429 | 41 | 1386 | 43 | 1355 | 44 | 1320 | 45 | 1289 | 1258 | 1224 | |
| | | SP6 | 1560 | 38 | 1518 | 39 | 1476 | 40 | 1441 | 41 | 1409 | 42 | 1382 | 1350 | 1321 | |
| | | SP7 | 1647 | 36 | 1605 | 37 | 1562 | 38 | 1531 | 39 | 1497 | 40 | 1467 | 1440 | 1408 | |
| | | SP8 | 1720 | N/A | 1710 | 35 | 1674 | 35 | 1642 | 36 | 1611 | 37 | 1581 | 1553 | 1527 | |
| | | SP9 | 1796 | N/A | 1759 | N/A | 1721 | N/A | 1687 | 35 | 1655 | 36 | 1628 | 1604 | 1578 | |
| GM9S800805CU* | W/W1 | SP1 | 1280 | 46 | 1228 | 48 | 1178 | 50 | 1134 | 52 | 1086 | 55 | 1036 | 986 | 936 | 35 - 65 |
| | | SP2 | 1401 | 42 | 1356 | 44 | 1313 | 45 | 1273 | 47 | 1234 | 48 | 1190 | 1145 | 1099 | |
| | | SP3 | 1593 | 37 | 1550 | 38 | 1512 | 39 | 1475 | 40 | 1436 | 41 | 1399 | 1360 | 1319 | |
| | | SP4 | 1706 | 35 | 1662 | 36 | 1621 | 37 | 1586 | 37 | 1550 | 38 | 1515 | 1479 | 1444 | |
| | | SP5 | 1821 | N/A | 1775 | N/A | 1736 | N/A | 1703 | 35 | 1669 | 36 | 1636 | 1605 | 1576 | |
| | | SP6 | 1836 | N/A | 1793 | N/A | 1757 | N/A | 1721 | N/A | 1689 | 35 | 1659 | 1628 | 1592 | |
| | | SP7 | 1932 | N/A | 1888 | N/A | 1855 | N/A | 1825 | N/A | 1794 | N/A | 1762 | 1733 | 1701 | |
| | | SP8 | 2184 | N/A | 2143 | N/A | 2110 | N/A | 2072 | N/A | 2048 | N/A | 2017 | 1989 | 1959 | |
| | | SP9 | 2221 | N/A | 2178 | N/A | 2145 | N/A | 2109 | N/A | 2082 | N/A | 2053 | 2025 | 1992 | |

# WIRING DIAGRAM


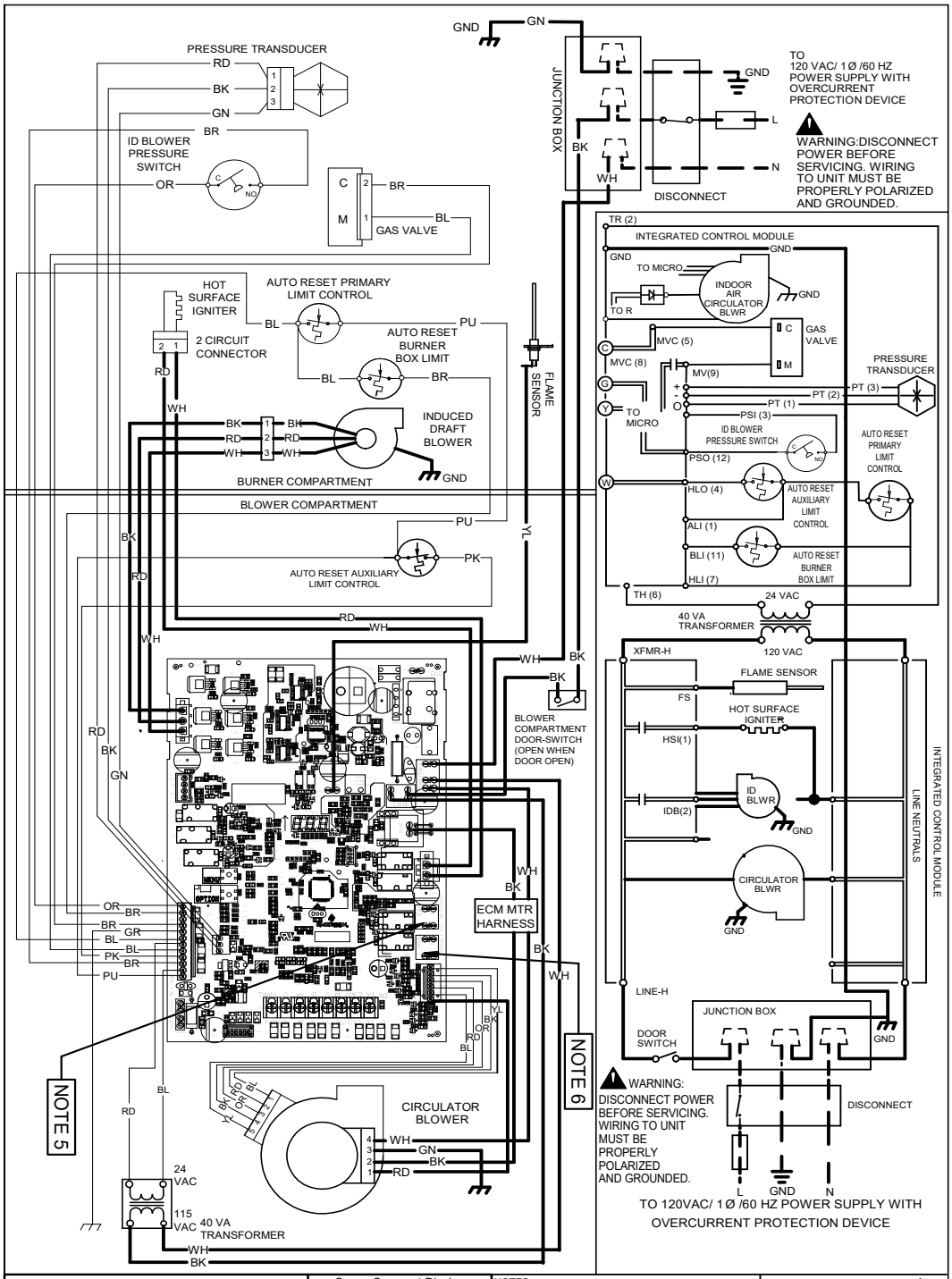


| Status & Fault (see installation manual for complete list of faults) | Seven Segment Display | | |
|---|---|---|---|
| | Seg. 1 | Seg. 2 | Seg. 3 |
| Idle | 1 | d | L |
| Continuous fan | F | A | n |
| Low Stage Cooling | 1 | A | C |
| High Stage Cooling | 2 | A | C |
| Gas Heat | | g | H |
| HP Heat, Low Stage | 1 | H | P |
| HP Heat, High Stage | 2 | H | P |
| Defrost | d | F | t |
| Lockout Due to Excessive Retries Recycle | E | E | 0 |
| Pressure Switch Closed When Expected To Be Open | E | E | 1 |
| Pressure Switch Open When Expected To Be Closed | E | E | 2 |
| Open High Limit Switch | E | E | 3 |
| Flame Detected When No Flame Should Be Present | E | E | 4 |
| Open Fuse | E | E | 5 |
| Low Flame Signal | E | E | 6 |
| Ignitor Fault Or Ignitor Relay Fault | E | E | 7 |
| Reversed Line Polarity | E | E | A |
| Grounding Error | E | 1 | 0 |
| Inernal Gas Valve Error | E | E | b |
| External Gas Valve Error | E | E | C |
| Aux Limit Switch Open | E | E | d |
| Burner Limit Switch Open | E | 1 | I |

NOTES:
1. MANUFACTUR'S SPECIFIED REPLACEMENT PARTS MUST BE USED WHEN SERVICING.
2. IF ANY OF THE ORIGINAL WIRE AS SUPPLIED WITH THE FURNACE MUST BE REPLACED, IT MUST BE REPLACED WITH WIRING MATERIAL HAVING A TEMPERATURE RATING OF AT LEAST 105°C. USE COPPER CONDUCTORS ONLY.
3. BLOWER SPEEDS SHOULD BE ADJUSTED BY INSTALLER TO MATCH THE INSTALLATION REQUIREMENTS SO AS TO PROVIDE THE CORRECT HEATING TEMPRATURE RISE AND THE CORRECT COOLING CFM.
4. UNIT MUST BE PERMANENTLY GROUNDED AND CONFORM TO N.E.C. AND LOCAL CODES.
5. EAC. NORMALLY OPEN CONTACTS FOR OPTIONAL ELECTRONIC AIR CLEANER USE. CONTACTS CLOSE WHEN INDOOR BLOWER IS RUNNING. TERMINALS ARE NOT INTERNALLY POWERED
6. HUM. NORMALLY OPEN CONTACTS FOR OPTIONAL HUMIDIFIER USE. CONTACTS CLOSE WHEN DRAFT INDUCER IS RUNNING. TERMINALS ARE NOT INTERNALLY POWERED

LOW VOLTAGE (24V)
LOW VOLTAGE FIELD
HI VOLTAGE (120V)
HI VOLTAGE FIELD
INTERNAL TO INTEGRATED CONTROL PLUG CONNECTION
JUNCTION
TERMINAL
OUTPUT

EQUIPMENT GND
FIELD GND
FIELD SPLICE
SWITCH (TEMP.)
IGNITER
SWITCH (PRESS.)
OVERCURRENT PROT. DEVICE

| COLOR CODES: | |
|---|---|
| YL YELLOW | PK PINK |
| OR ORANGE | BR BROWN |
| PU PURPLE | WH WHITE |
| GN GREEN | BL BLUE |
| BK BLACK | GY GRAY |
| | RD RED |

0140F02628-A

Wiring is subject to change. Always refer to the wiring diagram on the unit for the most up-to-date wiring.

| Furnace | | | | |
|---|---|---|---|---|
| | **Model Number** | _____ | | |
| | **Serial Number** | _____ | | |
| **ELECTRICAL** | | | | |
| Line Voltage (Measure **L1 to N** and **N to Ground** Voltage) | L - N | _____ | | |
| | N - G | _____ | | |
| Secondary Voltage (Measure Transformer Output Voltage) | R - C | _____ | | |
| Blower Amps | | _____ | | |
| **BLOWER EXTERNAL STATIC PRESSURE** | | | | |
| Return Air Static Pressure | | _____ | IN. W.C. | |
| Supply Air Static Pressure | | _____ | IN. W.C. | |
| Total External Static Pressure (Ignoring +/- from the reading above, add total here) | | _____ | IN. W.C. | |
| **TEMPERATURES** | | | | |
| Return Air Temperature (Dry bulb / Wet bulb) | | _____ | DB °F | _____ WB °F |
| Cooling Supply Air Temperature (Dry bulb / Wet bulb) | | _____ | DB °F | _____ WB °F |
| Heating Supply Air Temperature | | _____ | DB °F | |
| Temperature Rise | | _____ | DB °F | |
| Delta T (Difference between Supply and Return Temperatures) | | _____ | DB °F | |
| **GAS PRESSURES** | | | | |
| Gas Inlet Pressure | | _____ | IN. W.C. | |
| Gas Manifold Pressure (Low Fire) | | _____ | IN. W.C. | |
| Gas Manifold Pressure (High Fire) | | _____ | IN. W.C. | |
| Gas Type (NG) = Natural Gas / (LP) = Liquid Propane | | _____ | | |
| **Additional Checks** | | | | |
| Check wire routings for any rubbing | | _____ | | |
| Check for kinked pressure switch tubing. | | _____ | | |
| Check flue elbow for alignment and clamp tightness. | | _____ | | |
| Check screw tightness on blower wheel. | | _____ | | |
| Check factory wiring and wire connections. | | _____ | | |
| Check product for proper clearances as noted by installtion instructions | | _____ | | |
| **°F to °C formula: (°F - 32) divided by 1.8 = °C** | **°C to °F formula: (°C multiplied by 1.8) + 32 = °F** | | | |

THIS PAGE INTENTIONALLY LEFT BLANK

THIS PAGE INTENTIONALLY LEFT BLANK

**CUSTOMER FEEDBACK**

We are very interested in all product comments.
Please fill out the feedback form on one of the following links:
Goodman® Brand Products: (http://www.goodmanmfg.com/about/contact-us).
Amana® Brand Products: (http://www.amana-hac.com/about-us/contact-us).
You can also scan the QR code on the right for the product brand you purchased to be directed to the feedback page.

GOODMAN® BRAND

AMANA® BRAND

**PRODUCT REGISTRATION**

Thank you for your recent purchase. Though not required to get the protection of the standard warranty, registering your product is a relatively short process, and entitles you to additional warranty protection, except that failure by California and Quebec residents to register their product does not diminish their warranty rights.

For Product Registration, please register as follows:
Goodman® Brand products: (https://www.goodmanmfg.com/product-registration).
Amana® Brand products: (http://www.amana-hac.com/product-registration).
You can also scan the QR code on the right for the product brand you purchased to be directed to the Product Registration page.

GOODMAN® BRAND

AMANA® BRAND

19001 Kermier Rd. Waller, Tx 77484
*www.goodmanmfg.com • www.amana-hac.com*