CLICK ANYWHERE on THIS PAGE to RETURN to LVL LAMINATED VENEER LUMBER BEAMS at InspectApedia.com

ENGINEERED WOOD PRODUCTS

hySPAN®

Span guide for residential framing

September 2011

The natural solution for you.

CarterHoltHarvey
Woodproducts Australia

hySPAN® solutions range

Engineered to perform

hySPAN Structural LVL is engineered for reliable performance and is available in two complementary ranges. hySPAN and hySPAN+ are easy to work with using traditional building tools and are clearly branded for easy identification and your guarantee of quality.

- hySPAN is the product you've known and trusted for over two decades
- hySPAN+ offers an alternative to F17 hardwood beams in traditional sizes
- H2-S TERMINATOR® – cost effective termite protection with 25 year guarantee* for peace of mind
- Available FSC 'Chain of Custody' certified upon request
- Fully supported by CHH Woodproducts technical expertise

Contents

General	2
Terminology	3
Bearers	4
Floor Joists	6
Lintels	8
Rafters	12
Ceiling Joists	15
Hanging Beams	16
Underpurlins	17
Strutting Beams	18
Roof Beams	20
Verandah Beams	22
Garage Roof Pitching Beams	23
Common Installation Details	25
Notches, cuts and holes in beams, bearers, joists and rafters	26
Specification	27

Design Criteria and Loading

The spans given in these tables have been developed by experienced timber design engineers in accordance with AS1684.1:1999 and include the most up to date loading combinations from AS1170.0-1:2002 and AS1170.2:2011.

Floor loading applied includes an allowance for:

- Floor mass not exceeding 40 kg/m²
- Live load of up to 1.5 kPa/1.8 kN, for use in domestic houses.

For other situations, such as decks, balconies, tiled areas and apartment floors, our free designIT® software should be used for specification where alternate loading conditions may be applied.

Wind Loading

- N3 design wind classification used unless noted otherwise

For design wind classification N4 or greater and cyclonic wind regions designIT should be used for member sizing.

Member Specification

In selecting an appropriate beam size, specifiers should also consider the applicability of design deflection limits for the beams intended use.

Installation

The hySPAN range specified within this brochure can be installed in accordance with traditionally recognised framing practice as described in AS1684 and other installation details contained and referenced within this brochure.

For on-site, technical and product support, including assistance in sizing freecall

☎1800 808 131

For specific support and tie-down calculation, refer AS1684 or consult designIT where reactions are provided for all members for specification with typical connection details in AS1684 and other proprietary fastening systems.

Sub Floor Applications

Under normal conditions where adequate ventilation and clearance are provided, hySPAN may be safely used for sub-floor applications without the likelihood of decay.

Durability

hySPAN is not suitable for weather exposed applications unless suitably preservative treated. For guidance on treatment requirements please consult Carter Holt Harvey's brochure, 'Use of hySPAN and hyJOIST for weather exposed applications' along with useful industry reference manuals such as AS1684.2-2010 Appendix B and the FWPA-Timber service life design guide.

designIT Software

For optimised design using the full range of hySPAN sizes, our designIT software can be downloaded from: www.chhsoftware.com/designIT

design it for houses

More online. Download technical literature and free designIT software at www.chhwoodproducts.com.au/hySPAN

* The guarantee is provided by the chemical supplier for the benefit of the property owner. It is a limited and conditional guarantee covering the provision of replacement product in Australia. The full terms and conditions are available at **www.chhwoodproducts.com.au/guarantees**

Terminology

Span

For the purpose of using these tables, span may be interpreted as the clear distance between supports measured along the beam. Single Span Beams are beams supported at two points only. Continuous Span Beams are beams supported at three or more points along their length.

Continuous span values given in the tables should only be used where:

a) The beam is not notched or partially cut through at internal support points and,

b) If the spans are not equal, the largest span is not greater that twice the smallest adjacent span.

However if either of the above conditions are not met, use the single span tables for the purpose of obtaining the appropriate size.

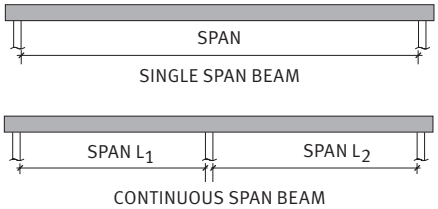

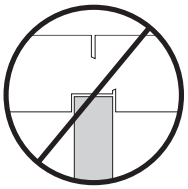

Spacing

Tables, such as those for rafters, floor joists and ceiling joists require the spacing of members to be known or selected in order to obtain the required size for a given span. Spacing should be interpreted as the centre to centre distance between adjacent parallel members.

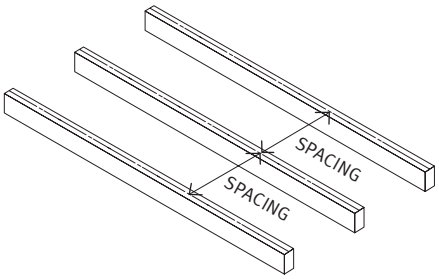

Load Widths

Roof load width (RLW) and Floor load width (FLW) can be determined from AS1684, or from the images below.

DETERMINATION OF FLOOR LOAD WIDTH

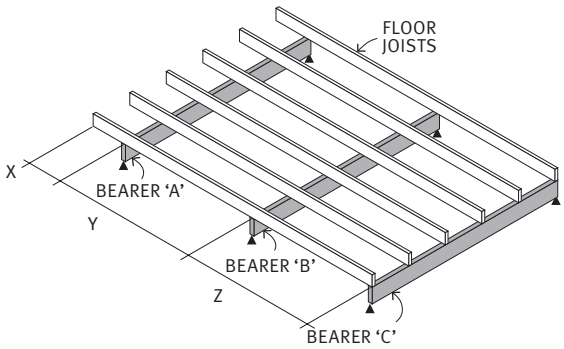

BEARER	FLOOR LOAD WIDTH 'FLW'
A	$FLW = X + \frac{Y}{2}$
B	$FLW = \frac{Y + Z}{2}$
C	$FLW = \frac{Z}{2}$

DETERMINATION OF ROOF LOAD WIDTH

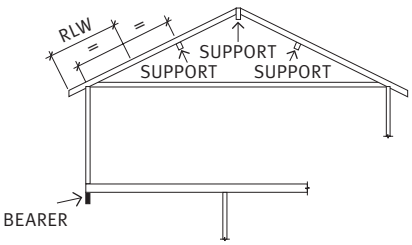

CONVENTIONAL ROOF
COUPLED, STRUTTED RIDGE

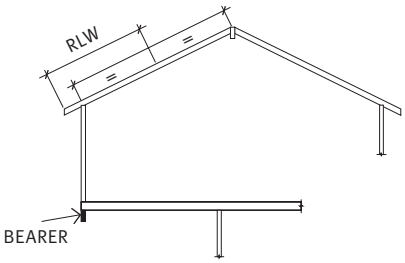

CATHEDRAL ROOF

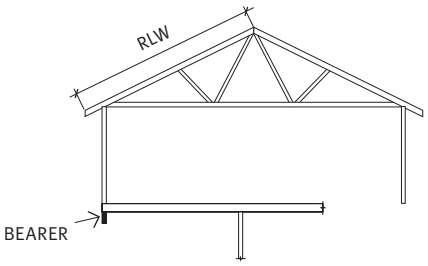

TRUSSED ROOF

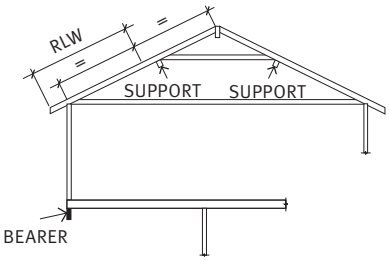

CONVENTIONAL ROOF
COUPLED, UNSTRUTTED RIDGE

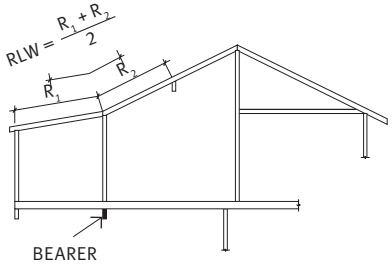

CATHEDRAL ROOF

These diagrams may also be used to determine roof load width for floor joists supporting load bearing walls and lintels in lower storey load bearing walls.

Bearers

Supporting Floor Loads only

Table 1

hySPAN SECTION D x B (mm)	FLOOR LOAD WIDTH 'FLW' (m)											
	1.2	1.8	2.4	3.0	4.2	5.4	1.2	1.8	2.4	3.0	4.2	5.4
	MAXIMUM SINGLE SPAN (m)						MAXIMUM CONTINUOUS SPAN (m)					
90 x 63	1.8	1.6	1.4	1.3	1.1	1.0	2.2	1.9	1.8	1.6	1.5	1.2
2/90 x 35*	1.9	1.6	1.5	1.4	1.2	1.1	2.3	2.0	1.9	1.7	1.5	1.3
2/90 x 45*	2	1.8	1.6	1.5	1.3	1.2	2.5	2.2	2.0	1.9	1.7	1.5
2/120 x 35*	2.5	2.2	2.0	1.8	1.6	1.5	3.1	2.7	2.5	2.3	2.1	1.8
130 x 63	2.6	2.2	2.0	1.9	1.7	1.5	3.2	2.8	2.5	2.4	2.0	1.7
2/140 x 35*	2.9	2.5	2.3	2.1	1.9	1.7	3.5	3.2	2.9	2.7	2.3	2.0
150 x 63	2.9	2.6	2.3	2.2	1.9	1.7	3.6	3.2	2.9	2.7	2.3	2.0
150 x 75	3.1	2.7	2.5	2.3	2.0	1.8	3.7	3.4	3.1	2.9	2.5	2.2
170 x 63	3.3	2.9	2.6	2.4	2.2	2.0	3.9	3.5	3.3	3.1	2.6	2.2
200 x 63	3.8	3.4	3.1	2.9	2.5	2.3	4.4	4.0	3.7	3.5	2.9	2.6
2/240 x 45*	4.8	4.4	4.1	3.8	3.5	3.2	5.6	5.1	4.7	4.5	4.1	3.7
240 x 63	4.4	4.0	3.7	3.4	3.1	2.8	5.1	4.6	4.3	4.0	3.5(105)	3.1(135)
300 x 63	5.1	4.7	4.3	4.1	3.8	3.5(65)	6.0	5.4	5.1	4.8(105)	4.3(135)	-
300 x 75	5.3	4.9	4.5	4.3	3.9	3.7(65)	6.3	5.7	5.3	5.0	4.6(135)	4.1(135)
360 x 63	5.9	5.3	5.0	4.7	4.3(65)	4.0(65)	6.9	6.2	5.8	5.5(135)	-	-

Shaded rows refer to hySPAN+. All other sections are hySPAN.

* Size built-up by vertical nail lamination – refer Detail H1 (page 25).

\- See designIT for spans and bearings.

Minimum bearing = 50 mm at end supports and 100 mm at internal supports for continuous span members unless noted otherwise as SPAN(BEARING).

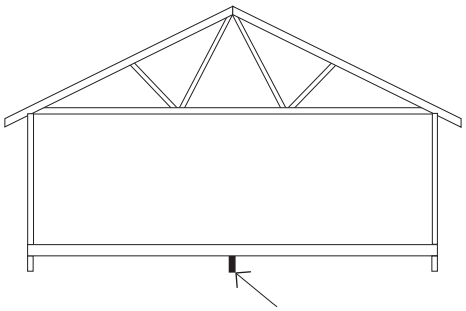

BEARER SUPPORTING FLOOR LOAD ONLY

designit for houses
Optimised sizing from the full hySPAN range can be obtained using the free designIT software.
www.chhsoftware.com/designIT

Bearers

Supporting Single or Upper Storey Load Bearing Walls

Table 2

hySPAN SECTION D x B (mm)	FLOOR LOAD WIDTH 'FLW' (m)																	
	1.2			2.1			3.0			1.2			2.1			3.0		
	ROOF LOAD WIDTH 'RLW' (m)																	
	1.8	4.2	6.6	1.8	4.2	6.6	1.8	4.2	6.6	1.8	4.2	6.6	1.8	4.2	6.6	1.8	4.2	6.6
	MAXIMUM SINGLE SPAN (m)									MAXIMUM CONTINUOUS SPAN (m)								
SHEET ROOF AND CEILING																		
90 x 63	1.4	1.3	1.2	1.3	1.2	1.1	1.2	1.1	1.0	1.9	1.7	1.5	1.7	1.6	1.5	1.6	1.5	1.4
2/90 x 35	1.5	1.3	1.2	1.3	1.2	1.1	1.2	1.1	1.1	2.0	1.8	1.6	1.8	1.6	1.5	1.7	1.5	1.5
2/90 x 45	1.6	1.4	1.3	1.5	1.3	1.2	1.3	1.2	1.2	2.2	1.9	1.8	2.0	1.8	1.7	1.8	1.7	1.6
2/120 x 35	2.0	1.8	1.6	1.8	1.6	1.5	1.6	1.5	1.4	2.7	2.4	2.2	2.4	2.2	2.0	2.2	2.0	1.9
130 x 63	2.0	1.8	1.7	1.8	1.7	1.6	1.7	1.6	1.5	2.7	2.4	2.2	2.5	2.2	2.1	2.3	2.1	2.0
2/140 x 35	2.3	2.1	1.9	2.1	1.9	1.8	1.9	1.8	1.7	3.1	2.8	2.5	2.8	2.6	2.4	2.6	2.4	2.3
150 x 63	2.4	2.1	1.9	2.1	1.9	1.8	1.9	1.8	1.7	3.2	2.8	2.6	2.8	2.6	2.4	2.6	2.3	2.2
150 x 75	2.5	2.2	2.0	2.2	2.0	1.9	2.1	1.9	1.8	3.3	3.0	2.7	3.0	2.7	2.6	2.8	2.6	2.4
170 x 63	2.7	2.4	2.2	2.4	2.2	2.0	2.2	2.0	1.9	3.6	3.2	2.9	3.2	2.9	2.7	2.7	2.6	2.5
200 x 63	3.1	2.8	2.6	2.8	2.6	2.4	2.6	2.4	2.3	4.0	3.7	3.4	3.7	3.5	3.2	3.3	3.0	2.9
2/240 x 45	4.1	3.8	3.5	3.8	3.5	3.3	3.5	3.3	3.1	5.1	4.7	4.4	4.7	4.4	4.2	4.4	4.2	4.0
240 x 63	3.7	3.3	3.1	3.4	3.1	2.9	3.1	2.9	2.7	4.6	4.2	4.0	4.3	4.0	3.8	3.8	3.6	3.4(105)
300 x 63	4.4	4.0	3.8	4.0	3.8	3.6	3.8	3.6	3.4	5.5	5.0	4.7	5.0	4.7	4.5(105)	4.7(135)	4.5(135)	4.3(135)
300 x 75	4.6	4.2	3.9	4.2	3.9	3.8	4.0	3.8	3.6	5.7	5.2	4.9	5.2	4.9	4.7	4.9(105)	5.1(135)	-
TILED ROOF AND CEILING																		
90 x 63	1.3	1.1	1.0	1.2	1.0	0.9	1.1	1.0	0.9	1.7	1.4	1.3	1.6	1.4	1.2	1.5	1.3	1.2
2/90 x 35	1.3	1.1	1.0	1.2	1.1	1.0	1.2	1.0	0.9	1.8	1.5	1.3	1.7	1.4	1.3	1.5	1.4	1.3
2/90 x 45	1.5	1.2	1.1	1.3	1.2	1.1	1.3	1.1	1.0	1.9	1.6	1.5	1.8	1.6	1.4	1.7	1.5	1.4
2/120 x 35	1.8	1.5	1.3	1.6	1.4	1.3	1.5	1.4	1.2	2.4	2.0	1.8	2.2	1.9	1.7	2.1	1.8	1.6
130 x 63	1.8	1.5	1.4	1.7	1.5	1.3	1.6	1.4	1.3	2.5	2.1	1.8	2.3	2.0	1.7	2.1	1.9	1.6
2/140 x 35	2.1	1.7	1.6	1.9	1.7	1.5	1.8	1.6	1.5	2.8	2.3	2.1	2.6	2.2	1.9	2.4	2.1	1.8
150 x 63	2.1	1.8	1.6	1.9	1.7	1.5	1.8	1.6	1.5	2.8	2.4	2.0	2.6	2.3	1.9	2.4	2.2	1.9
150 x 75	2.2	1.9	1.7	2.1	1.8	1.6	1.9	1.7	1.6	3.0	2.5	2.3	2.8	2.4	2.2	2.6	2.3	2.0
170 x 63	2.4	2.0	1.8	2.2	1.9	1.7	2.1	1.8	1.7	3.2	2.7	2.3	3.0	2.6	2.2	2.7	2.3	2.0
200 x 63	2.8	2.4	2.1	2.6	2.2	2.0	2.4	2.1	2.0	3.7	3.2	2.7	3.5	3.0	2.5	3.0	2.8	2.4(105)
2/240 x 45	3.8	3.2	2.9	3.5	3.1	2.8	3.3	2.9	2.7	4.7	4.2	3.8	4.4	4.0	3.6	4.2	3.9	3.4(135)
240 x 63	3.4	2.8	2.5	3.1	2.7	2.4	2.9	2.6	2.4	4.3	3.7	3.2(105)	4.0	3.5(105)	3.1(135)	3.6	3.2(105)	2.9(135)
300 x 63	4.0	3.5	3.2	3.8	3.4	3.0(65)	3.6	3.2	2.9(65)	5.0	4.4(105)	4.0(135)	4.7	4.3(135)	-	4.5(135)	4.0(135)	-

Shaded rows refer to hySPAN+. All other sections are hySPAN.

* Size built-up by vertical nail lamination – refer Detail H1 (page 25).

\- See designIT for spans and bearings.
Minimum bearing = 50 mm at end supports and 100 mm at internal supports for continuous span members unless noted otherwise as SPAN(BEARING).

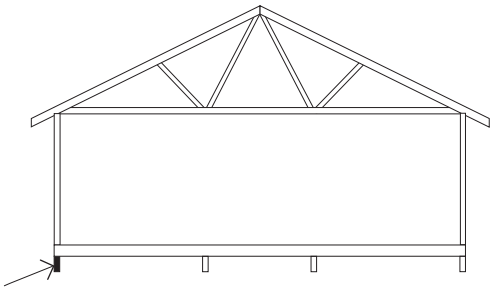

BEARER SUPPORTING SINGLE OR UPPER STOREY LOAD BEARING WALLS.

Floor Joists

Supporting Floor Loads only

Table 3

hySPAN SECTION D x B (mm)	FLOOR JOIST SPACING (mm)							
	450		600		450		600	
	MAXIMUM SINGLE SPAN AND OVERHANG 'O/H' (m)				MAXIMUM CONTINUOUS SPAN AND OVERHANG 'O/H' (m)			
	SPAN (m)	O/H (m)	SPAN (m)	O/H (m)	SPAN (m)	O/H (m)	SPAN (m)	O/H (m)
90 x 35	1.7	0.4	1.6	0.3	2.0	0.4	1.9	0.3
90 x 45	1.8	0.5	1.7	0.4	2.2	0.5	2.0	0.4
120 x 35	2.3	0.6	2.2	0.5	2.7	0.6	2.5	0.5
120 x 45	2.5	0.7	2.4	0.6	3.0	0.7	2.8	0.6
130 x 45	2.7	0.8	2.6	0.7	3.3	0.8	3.0	0.7
140 x 45	3.0	0.9	2.8	0.8	3.7	0.8	3.3	0.8
150 x 35	2.9	0.8	2.7	0.7	3.5	0.8	3.2	0.7
150 x 45	3.2	0.9	3.0	0.8	3.9	0.9	3.5	0.8
170 x 35	3.4	0.9	3.1	0.9	4.1	0.9	3.7	0.8
170 x 45	3.7	1.0	3.4	0.9	4.6	1.0	4.1	0.9
190 x 45	4.3	1.2	4.0	1.0	5.1	1.1	4.7	1.0
200 x 45	4.5	1.2	4.1	1.1	5.2	1.2	4.8	1.1
240 x 45	5.2	1.5	4.9	1.3	6.1	1.5	5.6	1.3
290 x 45	6.0	1.7	5.6	1.6	7.0	1.7	6.5	1.6
300 x 45	6.1	1.7	5.7	1.6	7.1	1.7	6.6	1.6

Shaded rows refer to hySPAN+. All other sections are hySPAN.
Minimum bearing = 30 mm at end supports and 45 mm at internal supports for continuous span members.

Floor Rigidity

In the selection of floor joist size for a given span, specifiers should use the above maximum joist spans for guidance and in addition take into account the intended occupancy or use of the floor. Floors supporting partition walls, those constructed using more rigid flooring or including ceiling battens will have improved dynamic performance. These factors may also be taken into consideration in selection of floor joist size.

hyJOIST Options Range

CHH Woodproducts Australia also has a range of composite plywood LVL I-Joists ideally suited for use in applications such as floor joists and rafters. With ten sizes ranging in depth from 200 to 400 mm, hyJOIST provide the perfect long span solution for mid floor joist design, and allows for concealed services within the depth of the floor. To explore the benefits of hyJOIST and to obtain sizing use the free designIT software, or call our free call market support service on 1800 808 131.

Overhanging Balconies

Overhangs detailed above have been designed to support balcony live loads. Overhanging floor joists used for balconies should either be totally weather protected or preservative treated to H3 level and painted or stained. Refer durability requirements as noted on Page 2 of this brochure.

JOISTS WITH D/B>4 REQUIRE LATERAL RESTRAINT AT SUPPORTS – REFER AS1684.2 CL 4.2.2.3

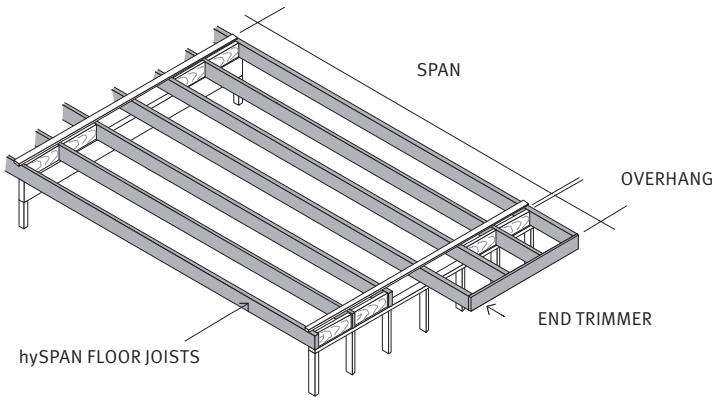

Optimised sizing from the full hySPAN range can be obtained using the free designIT software.
www.chhsoftware.com/designIT

Floor Joists

Supporting Parallel Load Bearing Walls Over Openings

Table 4

Floor joists supporting parallel load bearing walls over large spans can deflect excessively even if the 'rule of thumb' practice of doubling joists is followed. The following tables give maximum spans for double joists for various roof loads. Roof load width may be determined by reference to the diagrams on page 3.

SHEET ROOF AND CEILING								
hySPAN SECTION D x B (mm)	ROOF LOAD WIDTH 'RLW' (m)							
	1.8	3.3	4.8	6.3	1.8	3.3	4.8	6.3
	MAXIMUM SINGLE SPAN (m)				MAXIMUM CONTINUOUS SPAN (m)			
2/90 x 35	1.7	1.6	1.4	1.3	2.3	2.1	1.9	1.8
2/90 x 45	1.9	1.7	1.5	1.4	2.5	2.3	2.1	1.9
2/120 x 35	2.3	2.1	1.9	1.8	3.1	2.8	2.5	2.4
2/130 x 35	2.5	2.2	2.0	1.9	3.3	2.9	2.7	2.5
2/130 x 45	2.7	2.4	2.2	2.0	3.6	3.2	2.9	2.7
2/140 x 45	2.9	2.6	2.4	2.2	3.9	3.5	3.2	3.0
2/150 x 35	2.8	2.5	2.3	2.2	3.8	3.4	3.1	2.9
2/150 x 45	3.1	2.7	2.5	2.4	4.1	3.7	3.4	3.2
2/170 x 35	3.2	2.9	2.6	2.5	4.3	3.8	3.5	3.3(70)
2/170 x 45	3.5	3.1	2.9	2.7	4.6	4.2	3.8	3.6
2/190 x 35	3.7	3.3	3.0	2.8	4.8	4.4	4.0	3.8(70)
2/190 x 45	3.9	3.5	3.2	3.0	5.1	4.7	4.4	4.1
2/200 x 45	4.1	3.6	3.3	3.1	5.2	4.8	4.5	4.2(70)
2/240 x 45	4.8	4.4	4.1	3.8	6.0	5.5	5.2	5.0(70)
2/290 x 45	5.6	5.1	4.8	4.6	6.9	6.4	6.0(70)	5.7(70)
2/300 x 45	5.6	5.2	4.9	4.6	7.0	6.4	6.1(70)	5.8(70)

TILED ROOF AND CEILING								
hySPAN SECTION D x B (mm)	ROOF LOAD WIDTH 'RLW' (m)							
	1.8	3.3	4.8	6.3	1.8	3.3	4.8	6.3
	MAXIMUM SINGLE SPAN (m)				MAXIMUM CONTINUOUS SPAN (m)			
2/90 x 35	1.5	1.3	1.1	1.1	2.0	1.7	1.5	1.4
2/90 x 45	1.6	1.4	1.2	1.2	2.2	1.9	1.7	1.5
2/120 x 35	2.0	1.7	1.5	1.4	2.6	2.3	2.1	1.9
2/130 x 35	2.1	1.8	1.6	1.5	2.8	2.4	2.2	2.0(70)
2/130 x 45	2.3	2.0	1.8	1.6	3.1	2.6	2.4	2.2
2/140 x 45	2.5	2.1	1.9	1.8	3.3	2.9	2.6	2.4
2/150 x 35	2.4	2.1	1.9	1.7	3.2	2.8	2.5(70)	2.3(70)
2/150 x 45	2.6	2.3	2.0	1.9	3.5	3.0	2.7	2.5
2/170 x 35	2.7	2.4	2.1	2.0	3.7	3.2	2.8(70)	2.6(70)
2/170 x 45	3.0	2.6	2.3	2.1	4.0	3.4	3.1	2.9(70)
2/190 x 35	3.1	2.7	2.4	2.2	4.2	3.6(70)	3.2(70)	2.9(70)
2/190 x 45	3.4	2.9	2.6	2.4	4.5	3.9	3.5(70)	3.3(70)
2/200 x 45	3.5	3.0	2.7	2.5	4.6	4.0	3.6(70)	3.4(70)
2/240 x 45	4.2	3.7	3.3	3.1	5.4	4.8(70)	4.4(70)	4.0(90)
2/290 x 45	5.0	4.4	4.0	-	6.2	5.5(70)	5.0(90)	4.5(90)
2/300 x 45	5.0	4.5	4.0	-	6.2	5.6(70)	5.0(90)	4.6(90)

Shaded rows refer to hySPAN+. All other sections are hySPAN.

* Size built-up by vertical nail lamination – refer Detail H1 (page 25).

\- See designIT for spans and bearings.

Minimum bearing = 30 mm at end supports and 45 mm at internal supports for continuous span members unless noted otherwise as SPAN(BEARING).

Lintels

In Single or Upper Storey Load Bearing External Walls

Table 5

hySPAN SECTION D x B (mm)	SHEET ROOF AND CEILING				
	ROOF LOAD WIDTH 'RLW' (m)				
	1.8	3.0	4.2	5.4	6.6
	MAXIMUM SINGLE SPAN (m)				
90 x 45	1.9	1.5	1.3	1.1	1.0
120 x 35	2.4	2.0	1.7	1.5	1.3
120 x 45	2.6	2.2	1.9	1.7	1.5
140 x 35	2.7	2.4	2.1	1.8	1.7
140 x 45	2.9	2.5	2.4	2.1	1.9
150 x 35	2.8	2.5	2.3	2.0	1.8
150 x 45	3.0	2.7	2.4	2.3	2.0
170 x 35	3.1	2.7	2.5	2.4	2.1
170 x 45	3.3	2.9	2.7	2.5	2.4
190 x 35	3.4	3.0	2.8	2.6	2.5(45)
190 x 45	3.6	3.2	2.9	2.8	2.6
200 x 35	3.5	3.1	2.9	2.7	2.5(45)
200 x 45	3.7	3.3	3.0	2.8	2.7
200 x 63	4.0	3.5	3.3	3.1	2.9
240 x 35	4.1	3.6	3.3	3.1(45)	2.9(45)
240 x 45	4.3	3.8	3.5	3.3	3.1
240 x 63	4.6	4.1	3.7	3.5	3.4
290 x 35	4.8	4.1	3.6	3.2	2.8(45)
290 x 45	5.0	4.4	4.0	3.8	3.6(45)
300 x 45	5.0	4.5	4.1	3.8	3.7(45)
300 x 63	5.4	4.8	4.5	4.2	4.0
360 x 63	6.1	5.5	5.1	4.8	4.6
hySPAN SECTION D x B (mm)	TILED ROOF AND CEILING				
	ROOF LOAD WIDTH 'RLW' (m)				
	1.8	3.0	4.2	5.4	6.6
	MAXIMUM SINGLE SPAN (m)				
90 x 45	1.4	1.3	1.2	1.0	1.0
120 x 35	1.8	1.5	1.4	1.3	1.2
120 x 45	1.9	1.6	1.4	1.4	1.3
140 x 35	2.0	1.7	1.5	1.4	1.4
140 x 45	2.3	1.9	1.7	1.5	1.4
150 x 35	2.2	1.8	1.6	1.5	1.4
150 x 45	2.4	2.0	1.7	1.6	1.5
170 x 35	2.5	2.0	1.8	1.7	1.6
170 x 45	2.6	2.3	2.0	1.8	1.7
190 x 35	2.7	2.4	2.1	1.9	1.8
190 x 45	3.0	2.6	2.3	2.1	1.9
200 x 35	2.8	2.4	2.2	2.0	1.8(45)
200 x 45	3.0	2.6	2.4	2.2	2.0
200 x 63	3.4	2.9	2.6	2.4	2.3
240 x 35	3.4	2.9	2.6	2.5(45)	2.3(45)
240 x 45	3.6	3.1	2.8	2.6	2.5(45)
240 x 63	3.8	3.4	3.1	2.9	2.7
290 x 35	3.8	3.4	3.1(45)	2.9(45)	2.7(70)
290 x 45	4.1	3.6	3.4	3.1(45)	3.0(45)
300 x 45	4.1	3.7	3.4	3.1(45)	3.0(45)
300 x 63	4.5	3.9	3.7	3.5	3.3
360 x 63	5.1	4.6	4.2	3.9	3.8(45)

Shaded rows refer to hySPAN+. All other sections are hySPAN.
Minimum bearing 35 mm at end supports unless noted otherwise as SPAN(BEARING).

designIT for houses
Optimised sizing from the full hySPAN range can be obtained using the free designIT software.
www.chhsoftware.com/designIT

Lintels

In Lower Storey Load Bearing External Walls

Table 6

hySPAN SECTION D x B (mm)	SHEET ROOF AND CEILING								
	FLOOR LOAD WIDTH 'FLW' (m)								
	1.8			2.4			3.0		
	ROOF LOAD WIDTH 'RLW' (m)								
	1.8	4.2	6.6	1.8	4.2	6.6	1.8	4.2	6.6
	MAXIMUM SINGLE SPAN (m)								
130 x 35	1.6	1.4	1.3	1.5	1.4	1.3	1.4	1.3	1.2
140 x 45	1.9	1.7	1.6	1.8	1.6	1.5	1.7	1.6	1.5
150 x 45	2	1.8	1.7	1.9	1.7	1.6	1.8	1.6	1.5
170 x 45	2.2	2.0	1.9	2.1	1.9	1.8	2.0	1.8	1.7
190 x 45	2.5	2.3	2.1	2.4	2.2	2.1	2.2	2.1(45)	2.0(45)
200 x 45	2.6	2.4	2.2	2.5	2.3	2.1	2.3(45)	2.2(45)	2.0(45)
200 x 63	2.9	2.6	2.5	2.7	2.5	2.4	2.6	2.4	2.3
2/200 x 45*	3.2	3.0	2.8	3.1	2.8	2.7	2.9	2.7	2.6
240 x 45	3.1	2.9	2.7(45)	3.0(45)	2.8(45)	2.6(45)	2.8(45)	2.6(70)	2.5(70)
240 x 63	3.4	3.1	2.9	3.2	3.0	2.8	3.1	2.9(45)	2.7(45)
2/240 x 45*	3.7	3.5	3.3	3.5	3.3	3.2	3.4	3.2	3.1
290 x 45	3.6(45)	3.4(45)	3.2(45)	3.4(45)	3.2(70)	3.1(70)	3.3(70)	3.1(70)	3.0(70)
300 x 45	3.6(45)	3.4(45)	3.2(45)	3.5(45)	3.3(70)	3.1(70)	3.3(70)	3.2(70)	3.0(70)
300 x 63	4.0	3.7	3.5	3.8	3.6(45)	3.4(45)	3.6(45)	3.4(45)	3.3(70)
2/300 x 45*	4.3	4.0	3.8	4.1	3.9	3.7	4.0	3.8	3.6(45)
360 x 63	4.5	4.2(45)	4.0(45)	4.3(45)	4.1(45)	3.9(70)	4.2(70)	3.9(70)	3.8(70)
hySPAN SECTION D x B (mm)	TILED ROOF AND CEILING								
	FLOOR LOAD WIDTH 'FLW' (m)								
	1.8			2.4			3.0		
	ROOF LOAD WIDTH 'RLW' (m)								
	1.8	4.2	6.6	1.8	4.2	6.6	1.8	4.2	6.6
	MAXIMUM SINGLE SPAN (m)								
130 x 35	1.4	1.2	1.1	1.4	1.2	1.1	1.3	1.2	1.1
140 x 45	1.7	1.5	1.3	1.6	1.4	1.3	1.6	1.4	1.3
150 x 45	1.8	1.5	1.4	1.7	1.5	1.4	1.6	1.5	1.3
170 x 45	2.0	1.7	1.6	1.9	1.7	1.5	1.9	1.6	1.5(45)
190 x 45	2.3	2.0	1.8(45)	2.2	1.9	1.8(45)	2.1(45)	1.9(45)	1.7(45)
200 x 45	2.4	2.1	1.8(45)	2.3	2.0	1.8(45)	2.2(45)	1.9(45)	1.8(45)
200 x 63	2.7	2.3	2.1	2.5	2.2	2.0	2.4	2.2	2.0
2/200 x 45*	3.0	2.6	2.3	2.9	2.5	2.3	2.7	2.4	2.2
240 x 45	2.9	2.5(45)	2.3(70)	2.8(45)	2.4(45)	2.2(70)	2.7(45)	2.4(70)	2.2(70)
240 x 63	3.1	2.7	2.5(45)	3.0	2.7	2.4(45)	2.9(45)	2.6(45)	2.4(45)
2/240 x 45*	3.5	3.1	2.8	3.4	3.0	2.8	3.2	3.0	2.7
290 x 45	3.4(45)	3.0(70)	2.7(70)	3.3(70)	2.9(70)	2.7(70)	3.1(70)	2.8(70)	2.6(70)
300 x 45	3.4(45)	3.0(70)	2.8(70)	3.3(70)	3.0(70)	2.7(70)	3.2(70)	2.9(70)	2.6(70)
300 x 63	3.7	3.3(45)	3.1(70)	3.6(45)	3.2(45)	3.0(70)	3.5(45)	3.2(70)	2.9(70)
2/300 x 45*	4.0	3.6	3.3(45)	3.9	3.5	3.3(45)	3.8	3.5(45)	3.2(45)
360 x 63	4.2	3.8(45)	3.5(70)	4.1(45)	3.7(70)	3.4(70)	4.0(70)	3.6(70)	3.4(70)

Shaded rows refer to hySPAN+. All other sections are hySPAN.
Minimum bearing 35 mm unless otherwise denoted as SPAN(BEARING).
* Size built-up by vertical nail lamination – refer Detail H1 (page 25).

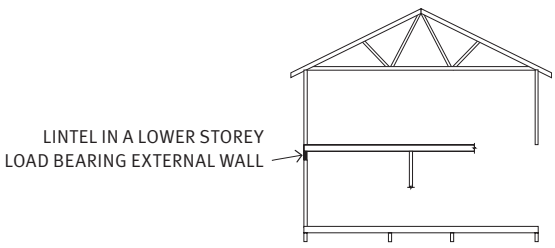

Lintels

Supporting Truncated Girder Truss

Table 7

hySPAN SECTION D x B (mm)	2400 SETBACK					
	SHEET ROOF AND CEILING			TILED ROOF AND CEILING		
	TRUSS SPAN (m)			TRUSS SPAN (m)		
	6.0	9.0	12.0	6.0	9.0	12.0
	MAXIMUM SPAN (m)			MAXIMUM SPAN (m)		
130 x 45	1.7	1.4	1.2	1.1	0.9	0.8
140 x 35	1.7	1.4	1.2	1.1	0.9	0.8(45)
150 x 45	2.1	1.8	1.5	1.4	1.2	1.0
170 x 35	2.2	1.9	1.6	1.5	1.2	1.1(45)
170 x 45	2.5	2.1	1.9	1.7	1.4	1.2
190 x 45	2.8	2.5(45)	2.3	2.1	1.7	1.5
200 x 45	2.9	2.6(45)	2.4(70)	2.2	1.8	1.6
200 x 63	3.1	2.9	2.6(45)	2.5	2.1	1.9
2/200 x 45*	3.5	3.2	3.0	2.8	2.5	2.5
240 x 45	3.4	3.1(45)	2.9(70)	2.7(45)	2.4(70)	2.1
240 x 63	3.6	3.3	3.1	2.9	2.6(45)	2.4(70)
2/240 x 45*	4.1	3.8	3.5	3.3	3.0	2.8(45)
290 x 45	3.9	3.6	3.4(70)	3.2(45)	2.9(70)	2.7(90)
300 x 45	4.0	3.7	3.4(70)	3.2(45)	2.9(70)	2.7(90)
300 x 63	4.4	4.0	3.8	3.5	3.2(45)	3.0(70)
2/300 x 45*	4.9	4.5	4.2	3.9	3.6	3.3(45)
360 x 63	5.1	4.7	4.4	4.1	3.7(45)	3.5(70)

Shaded rows refer to hySPAN+. All other sections are hySPAN.
Minimum bearing 35 mm unless noted otherwise as SPAN(BEARING).
* Size built-up by vertical nail lamination – refer Detail H1 (page 25).

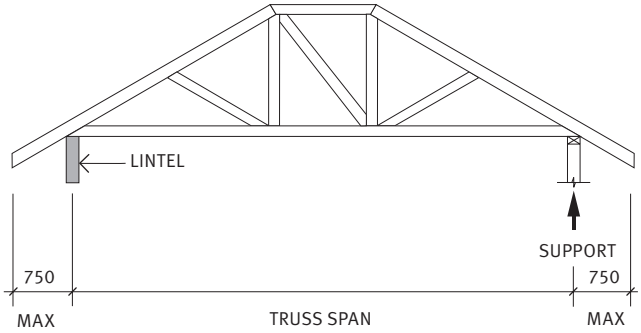

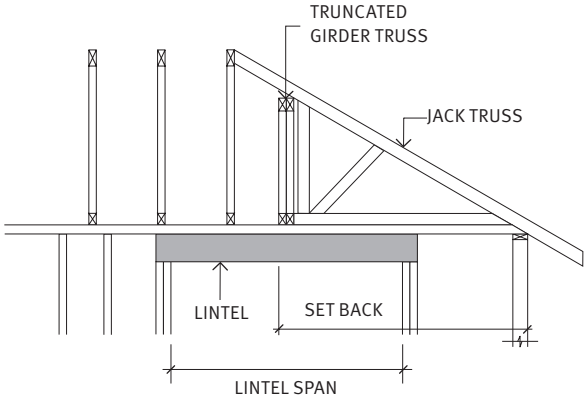

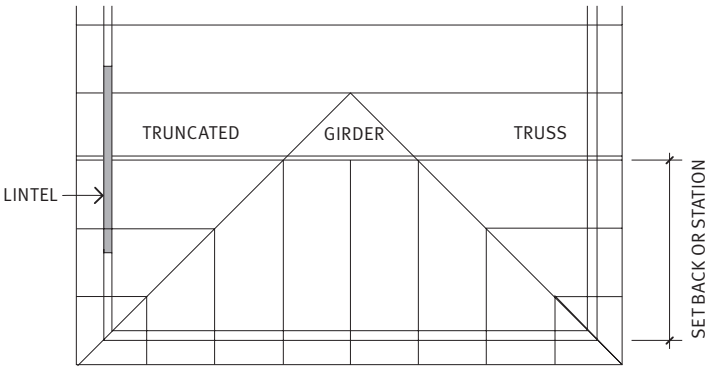

designIT for houses
Optimised sizing from the full hySPAN range can be obtained using the free designIT software.
www.chhsoftware.com/designIT

Lintels Supporting Strutting Beams

Strutting Beam Supporting Underpurlins and Hanging Beams

Table 8

hySPAN SECTION D x B (mm)	MAXIMUM HANGING BEAM / UNDERPURLIN SPAN (m)	SHEET ROOF AND CEILING					TILED ROOF AND CEILING				
		STRUTTING BEAM SPAN (m)									
		3.6	4.2	4.8	5.4	6.0	3.6	4.2	4.8	5.4	6.0
		MAXIMUM SINGLE SPAN (m)									
140 x 45	2.4	2.4	2.3	2.2	2.1	2.0	1.6	1.6	1.5	1.4	1.4
	4.2	2.2	2.0	1.9	1.8	1.7	1.4	1.4	1.3	1.2	1.2
150 x 63	2.4	2.8	2.7	2.6	2.5	2.4	2.0	1.9	1.8	1.7	1.6
	4.2	2.6	2.5	2.4	2.3	2.1	1.8	1.7	1.6	1.5	1.4
170 x 45	2.4	2.8	2.7	2.6	2.6	2.5	2.0	1.9	1.9	1.7	1.7
	4.2	2.6	2.5	2.4	2.3	2.2	1.8	1.7	1.6	1.5	1.5
170 x 63	2.4	3.1	3.0	2.9	2.9	2.7	2.4	2.2	2.1	2.0	1.9
	4.2	2.9	2.8	2.7	2.6	2.5	2.1	2.0	1.9	1.8	1.7
190 x 45	2.4	3.2	3.1	3.0	2.9	2.8	2.4	2.3	2.2	2.0	2.0
	4.2	3.0	2.9	2.7	2.7	2.5	2.1	2.0	1.9	1.8	1.7
200 x 45	2.4	3.2	3.1	3.1	3.0	2.9	2.5	2.4	2.3	2.2	2.1
	4.2	3.1	2.9	2.9	2.7	2.6	2.2	2.1	2.0	1.9	1.8
200 x 63	2.4	3.5	3.4	3.3	3.3	3.2	2.8	2.6	2.6	2.5	2.4
	4.2	3.3	3.2	3.1	3.1	3.0	2.5	2.4	2.3	2.2	2.1
240 x 45	2.4	3.8	3.7	3.6	3.5	3.4	3.1	3.0	2.8	2.7	2.6
	4.2	3.6	3.5	3.4	3.3	3.2	2.8	2.7	2.6	2.5	2.4
240 x 63	2.4	4.1	4.0	3.9	3.8	3.6	3.3	3.2	3.1	3.0	2.9
	4.2	3.9	3.8	3.7	3.5	3.4	3.1	3.0	2.8	2.7	2.7
2/240 x 45*	2.4	4.6	4.5	4.3	4.2	4.1	3.7	3.6	3.5	3.4	3.3
	4.2	4.4	4.2	4.1	4.0	3.9	3.5	3.4	3.3	3.1	3.1
300 x 63	2.4	4.9	4.8	4.7	4.5	4.4	3.9	3.8	3.7	3.6	3.5
	4.2	4.7	4.6	4.4	4.3	4.2	3.7	3.6	3.5	3.4	3.3
2/300 x 45*	2.4	5.3	5.2	5.1	5.0	4.9	4.3	4.2	4.1	3.9	3.8
	4.2	5.1	5.0	4.9	4.7	4.6	4.1	4.0	3.9	3.7	3.6
360 x 63	2.4	5.6	5.4	5.3	5.2	5.1	4.5	4.4	4.2	4.1	4.1
	4.2	5.4	5.2	5.1	5.0	4.9	4.3	4.2	4.0	3.9	3.9

Shaded rows refer to hySPAN+. All other sections are hySPAN.

* Size built-up by vertical nail lamination – refer Detail H1 (page 25).

HANGING BEAM/ UNDERPURLIN SPAN

$$= \frac{(L_1 + L_2)}{2}$$

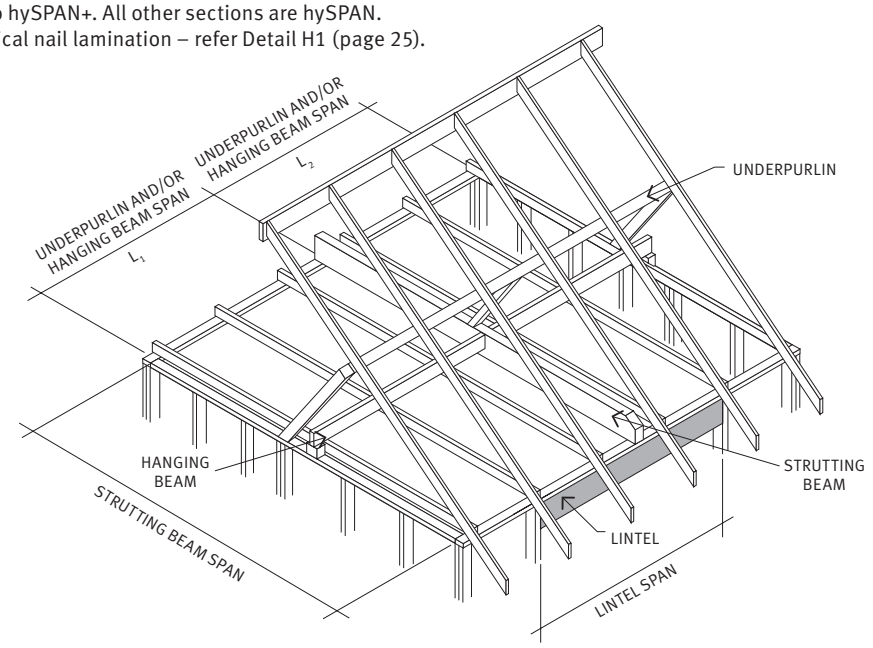

Rafters

Design Wind Classification N1/N2

Table 9

hySPAN SECTION D x B (mm)	ROOF MASS kg/m²	SINGLE SPAN				CONTINUOUS SPAN			
		MAXIMUM RAFTER SPACING (mm)							
		600		900		600		900	
		MAXIMUM RAFTER SPAN AND OVERHANG 'O/H#' (m)				MAXIMUM RAFTER SPAN AND OVERHANG 'O/H#' (m)			
		SPAN	O/H#	SPAN	O/H#	SPAN	O/H#	SPAN	O/H#
120 x 35	10	4.3	0.8	4.0	0.7	5.0	0.8	4.6	0.7
	20	4.0	0.8	3.5	0.8	5.0	0.8	4.6	0.7
	40	3.2	0.9	2.9	0.8	4.3	0.8	3.8	0.7
	90	2.5	1.0	2.2	0.9	3.4	0.9	3.0	0.8
130 x 35	10	4.9	0.8	4.4	0.8	5.6	0.8	5.2	0.7
	20	4.2	0.9	3.7	0.8	5.6	0.8	5.0	0.7
	40	3.4	1.0	3.0	0.9	4.6	0.9	4.1	0.8
	90	2.7	1.1	2.3	1.0	3.6	1.0	3.1	0.9
130 x 45	10	5.2	0.9	4.8	0.8	6.5	0.8	6.0	0.7
	20	4.5	1.0	4.0	0.9	6.0	0.8	5.4	0.8
	40	3.7	1.1	3.3	1.0	5.0	0.9	4.4	0.9
	90	2.9	1.2	2.5	1.1	3.9	1.0	3.4	1.0
140 x 35	10	5.4	0.9	4.9	0.8	6.6	0.8	6.1	0.7
	20	4.6	1.0	4.1	0.9	6.1	0.9	5.5	0.8
	40	3.8	1.1	3.3	1.0	5.0	0.9	4.5	0.9
	90	2.9	1.2	2.6	1.1	3.9	1.1	3.5	1.0
150 x 45	10	5.9	1.1	5.5	1.0	8.0	0.9	7.3	0.8
	20	5.1	1.1	4.6	1.0	6.8	1.0	6.1	0.9
	40	4.2	1.2	3.8	1.1	5.7	1.1	5.0	1.0
	90	3.3	1.4	2.9	1.3	4.5	1.2	3.9	1.1
170 x 35	10	6.3	1.0	5.8	1	-	-	7.0	0.9
	20	5.4	1.1	4.8	1.1	7.2	1.0	6.5	0.9
	40	4.4	1.2	3.9	1.2	5.9	1.1	5.3	1.0
	90	3.5	1.4	3.1	1.3	4.7	1.2	4.1	1.2
170 x 45	10	6.6	1.2	6.1	1.1	-	-	8.2	0.9
	20	5.7	1.3	5.2	1.2	7.7	1.1	6.9	1.0
	40	4.8	1.4	4.2	1.3	6.4	1.2	5.7	1.1
	90	3.8	1.5	3.3	1.4	5.0	1.4	4.4	1.3
190 x 35	10	7.1	1.2	6.5	1.1	-	-	7.6	1.0
	20	6.1	1.3	5.5	1.2	-	-	7.3	1.1
	40	5.0	1.5	4.5	1.3	6.7	1.3	6.0	1.2
	90	4.0	1.6	3.5	1.5	5.3	1.4	4.7	1.3
200 x 45	10	7.6	1.4	7.0	1.3	-	-	-	-
	20	6.6	1.5	6.0	1.4	-	-	8.0	1.2
	40	5.6	1.6	5.0	1.5	7.4	1.4	6.6	1.3
	90	4.4	1.8	3.9	1.7	5.9	1.6	5.2	1.5
240 x 35	10	8.6	1.6	8.0	1.4	-	-	-	-
	20	7.5	1.7	6.8	1.6	-	-	-	-
	40	6.3	1.8	5.6	1.7	-	-	7.5	1.5
	90	5.0	2.0	4.4	1.9	6.6	1.8	5.9	1.7
240 x 45	10	9.0	1.8	8.4	1.6	-	-	-	-
	20	7.9	1.9	7.2	1.7	-	-	-	-
	40	6.7	2.0	6.0	1.9	-	-	-	-
	90	5.3	2.2	4.7	2.1	7.2	2.0	6.3	1.8

Shaded rows refer to hySPAN+. All other sections are hySPAN.
- See designIT for spans and bearings.
Overhang (O/H) applies for birdsmouth not exceeding D/3 – see Detail H12 (page 26).

designit for houses
Optimised sizing from the full hySPAN range can be obtained using the free designIT software.
www.chhsoftware.com/designIT

Rafters

Design Wind Classification N3

Table 9 continued

hySPAN SECTION D x B (mm)	ROOF MASS kg/m²	SINGLE SPAN				CONTINUOUS SPAN			
		MAXIMUM RAFTER SPACING (mm)							
		600		900		600		900	
		MAXIMUM RAFTER SPAN AND OVERHANG 'O/H#' (m)				MAXIMUM RAFTER SPAN AND OVERHANG 'O/H#' (m)			
		SPAN	O/H#	SPAN	O/H#	SPAN	O/H#	SPAN	O/H#
120 x 35	10	4.3	0.8	3.9	0.7	5	0.8	4.6	0.7
	20	4.0	0.8	3.5	0.8	5	0.8	4.6	0.7
	40	3.2	0.9	2.9	0.8	4.3	0.8	3.8	0.7
	90	2.5	1.0	2.2	0.9	3.4	0.9	3.0	0.8
130 x 35	10	4.7	0.8	4.1	0.8	5.6	0.8	4.9	0.7
	20	4.2	0.9	3.7	0.8	5.6	0.8	5.0	0.7
	40	3.4	1.0	3.0	0.9	4.6	0.9	4.1	0.8
	90	2.7	1.1	2.3	1.0	3.6	1.0	3.1	0.9
130 x 45	10	5.2	0.9	4.5	0.9	6.5	0.8	5.7	0.8
	20	4.5	1.0	4.0	0.9	6.0	0.8	5.4	0.8
	40	3.7	1.1	3.3	1.0	5.0	0.9	4.4	0.9
	90	2.9	1.2	2.5	1.1	3.9	1.0	3.4	1.0
140 x 35	10	5.2	0.9	4.6	0.9	6.2	0.8	5.2	0.8
	20	4.6	1.0	4.1	0.9	6.1	0.9	5.4	0.8
	40	3.8	1.1	3.3	1.0	5.0	0.9	4.5	0.9
	90	2.9	1.2	2.6	1.1	3.9	1.1	3.5	1.0
150 x 45	10	5.9	1.1	5.2	1.0	7.7	0.9	6.4	0.9
	20	5.1	1.1	4.6	1.0	6.8	1.0	6.1	0.9
	40	4.2	1.2	3.8	1.1	5.7	1.1	5.0	1.0
	90	3.3	1.4	2.9	1.3	4.5	1.2	3.9	1.1
170 x 35	10	6.2	1.0	5.4	1.1	6.8	1.0	5.8	1.0
	20	5.4	1.1	4.8	1.1	7.0	1.0	6.0	1.0
	40	4.4	1.2	3.9	1.2	5.9	1.1	5.3	1.0
	90	3.5	1.4	3.1	1.3	4.7	1.2	4.1	1.2
170 x 45	10	6.6	1.2	5.9	1.1	-	-	7.0	1.0
	20	5.7	1.3	5.2	1.2	7.7	1.1	6.9	1.0
	40	4.8	1.4	4.2	1.3	6.4	1.2	5.7	1.1
	90	3.8	1.5	3.3	1.4	5.0	1.4	4.4	1.3
190 x 35	10	7.1	1.2	6.2	1.2	7.4	1.2	6.3	1.1
	20	6.1	1.3	5.5	1.2	7.6	1.2	6.4	1.1
	40	5.0	1.5	4.5	1.3	6.7	1.3	6	1.2
	90	4.0	1.6	3.5	1.5	5.3	1.4	4.7	1.3
200 x 45	10	7.6	1.4	6.9	1.3	-	-	7.7	1.2
	20	6.6	1.5	6.0	1.4	-	-	8.0	1.2
	40	5.6	1.6	5.0	1.5	7.4	1.4	6.6	1.3
	90	4.4	1.8	3.9	1.7	5.9	1.6	5.2	1.5
240 x 35	10	8.0	1.7	6.5	1.6	-	-	7.0	1.5
	20	7.5	1.7	6.7	1.6	-	-	7.2	1.5
	40	6.3	1.8	5.6	1.7	-	-	7.1	1.5
	90	5.0	2.0	4.4	1.9	6.6	1.8	5.9	1.7
240 x 45	10	9.0	1.8	8.2	1.6	-	-	-	-
	20	7.9	1.9	7.2	1.7	-	-	-	-
	40	6.7	2.0	6.0	1.9	-	-	-	-
	90	5.3	2.2	4.7	2.1	7.2	2.0	6.3	1.8

Shaded rows refer to hySPAN+. All other sections are hySPAN.
- See designIT for spans and bearings.
Overhang (O/H) applies for birdsmouth not exceeding D/3 – see Detail H12 (page 26).

Hip or Valley Rafters

Supporting Rafters only (not supporting underpurlins)

Table 10

hySPAN SECTION D x B (mm)	SHEET ROOF ONLY	SHEET ROOF AND CEILING	TILE ROOF ONLY	TILED ROOF AND CEILING
	MAXIMUM SINGLE SPAN (m)			
120 x 35	3.1	2.8	2.4	2.3
120 x 45	3.3	3.0	2.6	2.5
130 x 45	3.4	3.1	2.7	2.6
140 x 35	3.5	3.1	2.7	2.6
150 x 35	3.6	3.2	2.8	2.7
150 x 45	3.8	3.4	3.0	2.9
170 x 35	3.9	3.6	3.1	3.0
170 x 45	4.2	3.8	3.3	3.1
190 x 45	4.6	4.2	3.6	3.5
200 x 35	4.3	4.0	3.5	3.3
200 x 45	4.7	4.2	3.7	3.5
240 x 45	5.4	4.9	4.3	4.1
290 x 45	6.2	5.7	4.9	4.7
300 x 63	6.7	6.2	5.4	5.2
	MAXIMUM CONTINUOUS SPAN			
120 x 35	3.8	3.4	3.0	2.8
120 x 45	4.0	3.6	3.1	3.0
130 x 45	4.2	3.8	3.3	3.2
140 x 35	4.2	3.8	3.3	3.2
150 x 35	4.4	4.0	3.4	3.3
150 x 45	4.7	4.2	3.7	3.5
170 x 35	4.7	4.4	3.8	3.6
170 x 45	5.1	4.6	4.0	3.9
190 x 45	5.6	5.1	4.4	4.3
200 x 35	5.1	4.9	4.3	4.1
200 x 45	5.8	5.2	4.6	4.4
240 x 45	6.3	6.1	5.3	5.1
290 x 45	6.8	6.7	6.1	5.8
300 x 63	8.2	7.6	6.7	6.4

Shaded rows refer to hySPAN+. All other sections are hySPAN.

SINGLE SPAN HIP RAFTER

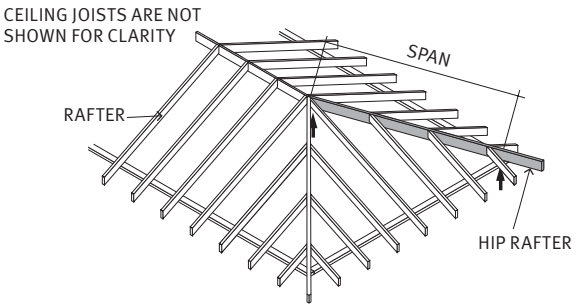

CONTINUOUS SPAN HIP RAFTER

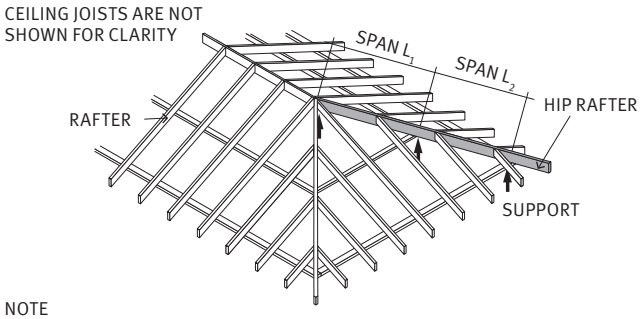

NOTE
1. USE THE LARGEST SPAN (L_1 OR L_2) TO ENTER THE TABLE.
2. THE LARGEST SPAN SHOULD NOT BE GREATER THAN TWICE THE ADJACENT SPAN, OTHERWISE USE THE SINGLE SPAN TABLE.

designIT for houses
Optimised sizing from the full hySPAN range can be obtained using the free designIT software.
www.chhsoftware.com/designIT

Ceiling Joists

Supporting Ceiling Lining only

Table 11

hySPAN SECTION D x B (mm)	CEILING JOIST SPACING (mm)					
	450	600	900	450	600	900
	MAXIMUM SINGLE SPAN (m)			MAXIMUM CONTINUOUS SPAN (m)		
90 x 35	2.5	2.5	2.5	3.0	3.0	3.0
90 x 45	2.9	2.9	2.9	3.4	3.4	3.4
120 x 35	3.9	3.9	3.7	4.6	4.6	4.6
120 x 45	4.4	4.4	3.9	5.2	5.2	5.2
130 x 35	4.3	4.3	3.9	5.1	5.1	5.1
130 x 45	4.9	4.6	4.2	5.7	5.7	5.4
140 x 35	4.9	4.7	4.3	5.8	5.8	5.5
140 x 45	5.2	4.9	4.5	6.4	6.2	5.7
150 x 35^	5.1	4.9	4.5	6.3	6.1	5.7
150 x 45	5.3	5.1	4.7	6.6	6.4	5.9

Shaded rows refer to hySPAN+. All other sections are hySPAN.
Install permanent batten at mid span at top of all joists and braced back to a point of rigidity to prevent rollover under construction and maintenance loads.
^ Ceiling joists not fixed to rafters require blocking at supports to prevent rollover.

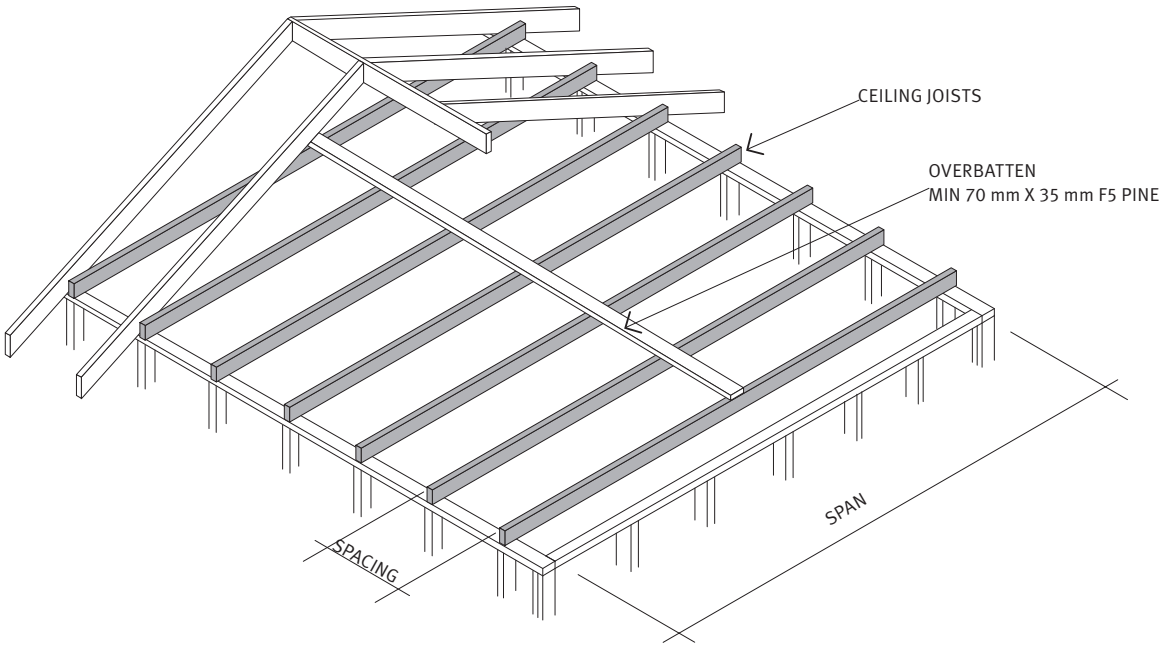

Hanging Beams

Supporting Ceiling Joists

Table 12

hySPAN SECTION D x B (mm)	CEILING LOAD WIDTH 'CLW' (m)									
	1.2	1.5	1.8	2.1	2.4	2.7	3.0	3.6	4.2	4.8
	MAXIMUM SINGLE SPAN (m)									
120 x 35	3.0	3.0	3.0	2.9	2.8	2.6	2.5	2.3	2.2	2.0
120 x 45	3.4	3.4	3.3	3.1	3.0	2.8	2.7	2.5	2.4	2.2
140 x 35	3.8	3.8	3.6	3.4	3.2	3.1	2.9	2.7	2.5	2.4
140 x 45	4.3	4.1	3.9	3.6	3.5	3.3	3.2	2.9	2.7	2.6
150 x 35	4.1	4.0	3.8	3.5	3.4	3.2	3.1	2.8	2.7	2.5
150 x 45	4.6	4.3	4.0	3.8	3.6	3.5	3.3	3.1	2.9	2.7
170 x 45	5.2	4.9	4.6	4.3	4.1	3.9	3.8	3.5	3.3	3.1
170 x 63	5.7	5.3	5.0	4.8	4.5	4.3	4.2	3.9	3.6	3.4
190 x 35	5.5	5.1	4.8	4.5	4.3	4.1	4.0	3.7	3.4	3.2
190 x 45	5.9	5.5	5.2	4.9	4.7	4.5	4.3	4.0	3.7	3.5
200 x 35	5.7	5.3	5.0	4.7	4.5	4.3	4.1	3.8	3.5	3.3
200 x 45	6.0	5.7	5.3	5.0	4.8	4.6	4.4	4.1	3.8	3.6
200 x 63	6.4	6.1	5.8	5.5	5.3	5.1	4.9	4.5	4.2	4.0
240 x 45	6.9	6.6	6.3	6.1	5.8	5.6	5.3	5.0	4.7	4.4

Shaded rows refer to hySPAN+. All other sections are hySPAN.

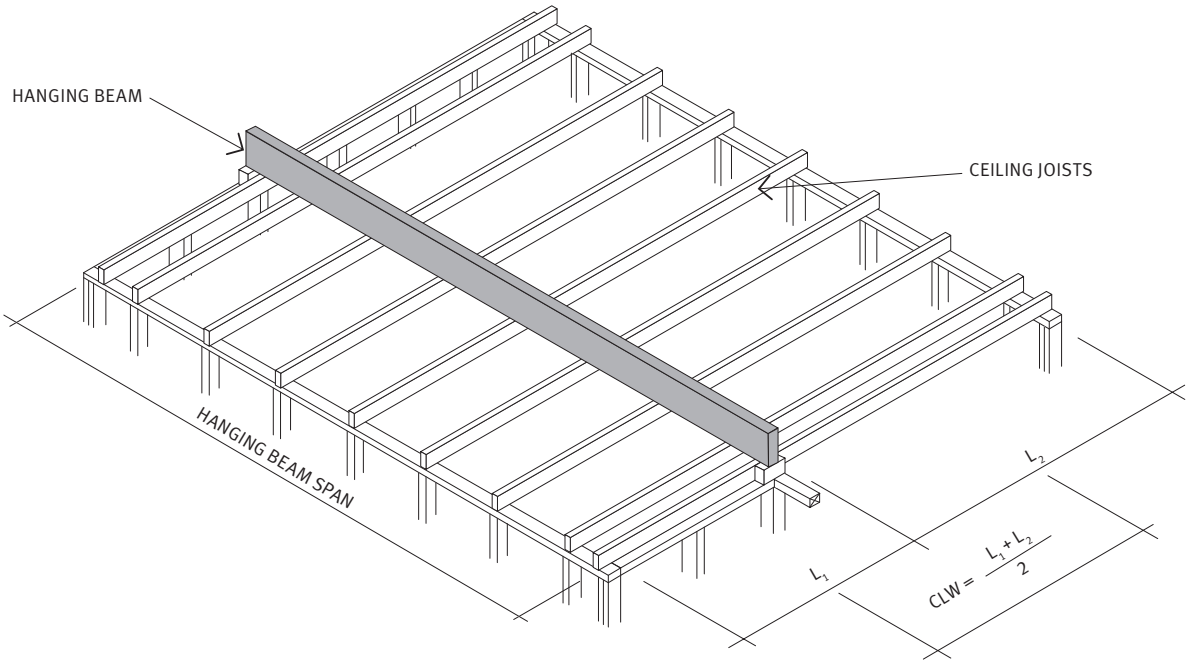

designIT for houses
Optimised sizing from the full hySPAN range can be obtained using the free designIT software.
www.chhsoftware.com/designIT

Underpurlins

Table 13

hySPAN SECTION D x B (mm)	ROOF TYPE	ROOF LOAD WIDTH 'RLW' (m)							
		1.8	2.4	2.7	3.6	1.8	2.4	2.7	3.6
		MAXIMUM SINGLE SPAN (m)				MAXIMUM CONTINUOUS SPAN (m)			
90 x 63	Sheet	2.4	2.3	2.1	1.9	3.1	2.9	2.7	2.5
	Tile	1.6	1.5	1.4	1.3	2.2	2.0	1.9	1.7
130 x 63	Sheet	3.3	3.1	3.0	2.7	4.5	4.1	3.9	3.3
	Tile	2.4	2.2	2.1	1.9	3.2	2.9	2.8	2.5
150 x 63	Sheet	3.8	3.5	3.4	3.1	5.2	4.8	4.6	3.8
	Tile	2.7	2.5	2.4	2.2	3.7	3.3	3.2	2.9
170 x 63	Sheet	4.4	4.0	3.8	3.5	5.9	5.4	5.1	4.4
	Tile	3.1	2.8	2.7	2.5	4.2	3.8	3.7	3.3
200 x 63	Sheet	5.1	4.8	4.6	4.1	6.8	6.3	5.9	5.1
	Tile	3.6	3.4	3.2	2.9	4.9	4.4	4.3	3.9

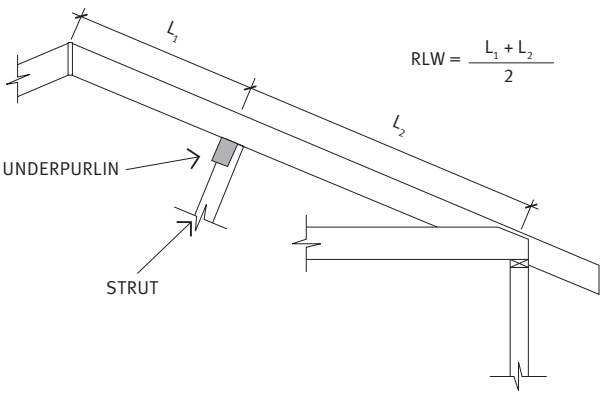

Strutting Beams

Supporting Underpurlins

Table 14

hySPAN SECTION D x B (mm)	SHEET ROOF				
	ROOF AREA (m²)				
	6.0	9.0	12.0	15.0	18.0
	MAXIMUM SPAN (m)				
170 x 63	3.7	3.1	2.7	2.4	2.0
200 x 63(E)	4.7	3.9	3.4	3.1	2.7
2/190 x 35*	4.7	3.7	3.1	2.7	2.3
2/200 x 45*	5.4	4.6	4.0	3.7	3.4
2/240 x 45*	6.7	6.0	5.3	4.6	4.1
240 x 63(E)	6.0	5.1	4.5	4.0	3.7
2/240 x 63*	7.0	6.4	6.0	5.5	5.1
2/290 x 45*(E)	7.8	6.6	5.8	5.2	4.7
300 x 63(E)	7.3	6.6	6.1	5.4	4.8
2/300 x 45*(E)	7.9	6.5	5.7	5.1	4.7
360 x 63(E)	8.5	7.7	7.1	6.2	5.6
400 x 63(E)	9.2	8.5	7.6	6.7	6.0
450 x 63(E)	10.1	9.0	7.9	7.1	6.6
hySPAN SECTION D x B (mm)	TILED ROOF				
	ROOF AREA (m²)				
	6.0	9.0	12.0	15.0	18.0
	MAXIMUM SPAN (m)				
170 x 63	2.5	2.1	1.8	1.6	1.5
200 x 63(E)	3.2	2.6	2.3	2.0	1.9
2/190 x 35*	3.2	2.6	2.3	2.1	1.9
2/200 x 45*	3.8	3.1	2.7	2.4	2.2
2/240 x 45*	5.0	4.2	3.7	3.3	3.0
240 x 63(E)	4.2	3.4	3.0	2.7	2.5
2/240 x 63*	5.6	4.7	4.2	3.7	3.4
2/290 x 45*(E)	6.3	5.5	4.8	4.3	4.0
300 x 63(E)	5.7	4.7	4.1	3.7	3.4
2/300 x 45*(E)	6.4	5.6	4.9	4.3	3.9
360 x 63(E)	6.9	6.1	5.4	4.9	4.5
400 x 63(E)	7.6	6.7	6.2	5.7	5.0
450 x 63(E)	8.4	7.5	6.7	6.1	5.5

Shaded rows refer to hySPAN+. All other sections are hySPAN.

For all sizes provide lateral restraint at mid-span or at strutting points – Refer detail H10 (page 25)

* Size built-up by vertical nail lamination – refer Detail H1 (page 25). Minimum bearing 35 mm at end supports

(E) Provide end restraint at supports – refer Detail H8 (page 25).

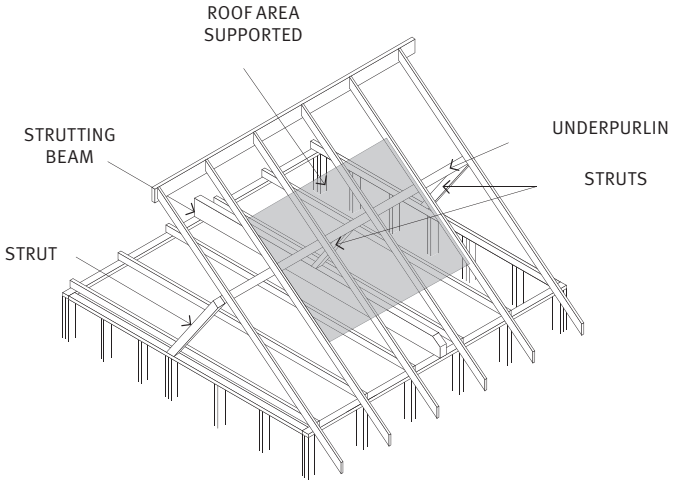

Optimised sizing from the full hySPAN range can be obtained using the free designIT software.
www.chhsoftware.com/designIT

Strutting Beams

Supporting Underpurlins and Ceiling Joists#/Hanging Beams#

Table 15

hySPAN SECTION D x B (mm)	SHEET ROOF AND CEILING				
	ROOF AREA (m²)				
	6.0	9.0	12.0	15.0	18.0
	MAXIMUM SPAN (m)				
170 x 63	3.0	2.7	2.5	2.3	2.1
2/170 x 45*	3.5	3.1	2.9	2.6	2.5
2/190 x 35*	3.7	3.3	3.1	2.8	2.5
200 x 63(E)	3.7	3.3	3.0	2.8	2.6
2/200 x 45*	4.0	3.8	3.5	3.3	3.1
240 x 63(E)	4.3	4.0	3.8	3.6	3.4
2/240 x 45*	4.8	4.5	4.3	4.1	3.9
2/290 x 45*(E)	5.6	5.3	5.0	4.8	4.6
300 x 63(E)	5.2	4.9	4.6	4.4	4.2
360 x 63(E)	6.0	5.7	5.4	5.2	5.0
400 x 63(E)	6.5	6.2	5.9	5.7	5.5
450 x 63(E)	7.1	6.8	6.5	6.3	6.1
hySPAN SECTION D x B (mm)	TILED ROOF AND CEILING				
	ROOF AREA (m²)				
	6.0	9.0	12.0	15.0	18.0
	MAXIMUM SPAN (m)				
170 x 63	2.3	2.0	1.7	1.6	1.4
2/170 x 45*	2.7	2.3	2.1	1.9	1.7
2/190 x 35*	2.9	2.5	2.2	2.0	1.8
200 x 63(E)	2.9	2.5	2.2	2.0	1.8
2/200 x 45*	3.4	2.9	2.6	2.4	2.2
240 x 63(E)	3.7	3.2	2.8	2.6	2.4
2/240 x 45*	4.1	3.8	3.4	3.1	2.9
2/290 x 45*(E)	4.9	4.5	4.2	3.9	3.7
300 x 63(E)	4.5	4.1	3.8	3.5	3.3
360 x 63(E)	5.3	4.8	4.5	4.2	4.0(45)
400 x 63(E)	5.8	5.3	4.9	4.7	4.4(45)
450 x 63(E)	6.4	5.9	5.5	5.2	5.0(45)

Shaded rows refer to hySPAN+. All other sections are hySPAN.
Minimum bearing 35 mm at end supports, unless noted otherwise SPAN(BEARING).
* Size built-up by vertical nail lamination – refer Detail H1 (page 25).
\# Sizes suitable for average hanging beam span/ceiling load width = 3.0 m.
(E) Provide end restraint at supports – refer Detail H8/H9 (page 25).

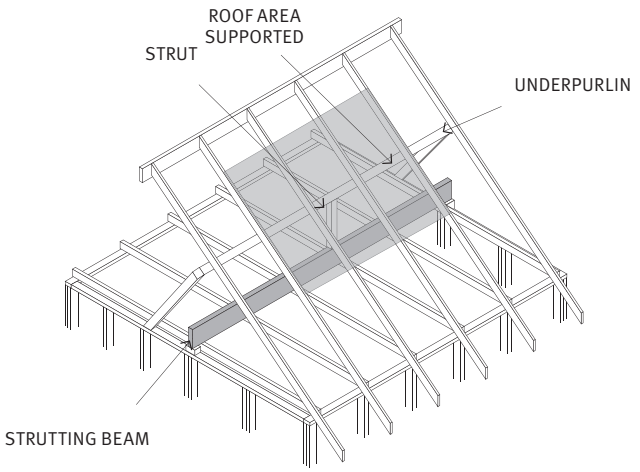

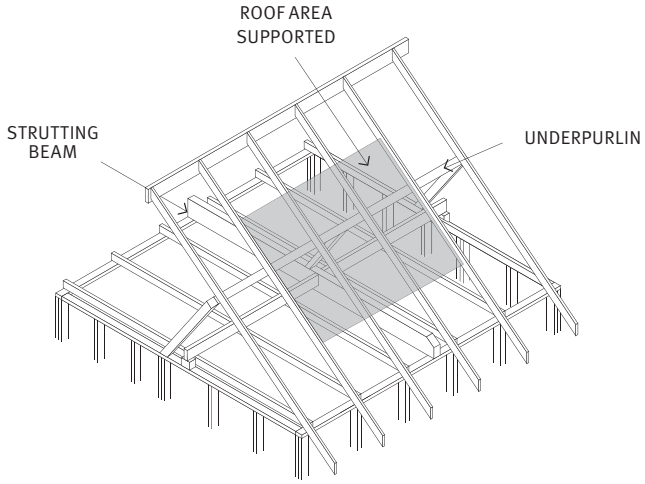

Roof Beams

Ridge, Intermediate, Eave and Bressumer Beams

Table 16

hySPAN SECTION D x B (mm)	SHEET ROOF AND CEILING							
	ROOF LOAD WIDTH 'RLW' (m)							
	2.4	2.7	3.0	3.6	4.2	4.8	5.4	6.0
	MAXIMUM SINGLE SPAN (m)							
150 x 45	2.7	2.6	2.5	2.3	2.2	2.1	2.0	1.9
170 x 45	3.0	2.9	2.8	2.6	2.5	2.3	2.2	2.1
190 x 45	3.4	3.3	3.2	3.0	2.8	2.7	2.5	2.4
200 x 45	3.6	3.4	3.3	3.1	2.9	2.8	2.6	2.5
200 x 63	3.9	3.8	3.7	3.4	3.2	3.1	2.9	2.8
240 x 45	4.3	4.2	4.0	3.7	3.5	3.4	3.2	3.1
240 x 63	4.7	4.5	4.4	4.1	3.9	3.7	3.5	3.4
290 x 45	5.2	5.0	4.8	4.5	4.3	4.1	3.9	3.7
300 x 45	5.3	5.1	4.9	4.6	4.3	4.1	3.9	3.8
300 x 63	5.9	5.6	5.4	5.1	4.8	4.6	4.4	4.2
300 x 75	6.2	5.9	5.7	5.4	5.1	4.8	4.6	4.4
360 x 63	7.0	6.7	6.5	6.1	5.8	5.5	5.2	5.0
400 x 45	6.8	6.4	6.1	5.5	5.1	4.7	4.4	4.2
400 x 63	7.7	7.4	7.2	6.7	6.4	6.1	5.8	5.6
400 x 75	8.1	7.8	7.6	7.1	6.7	6.4	6.1	5.9
450 x 63	8.6	8.3	8.0	7.6	7.2	6.8	6.5	-
	MAXIMUM CONTINUOUS SPAN (m)							
150 x 45	3.6	3.4	3.3	3.1	2.9	2.8	2.6	2.4
170 x 45	4.1	3.9	3.7	3.5	3.3	3.1	3.0	2.8
190 x 45	4.6	4.4	4.3	4.0	3.8	3.6	3.3	3.2
200 x 45	4.8	4.6	4.4	4.1	3.9	3.7	3.4	3.3
200 x 63	5.3	5.1	4.9	4.6	4.3	4.1	3.9	3.8
240 x 45	5.8	5.6	5.3	4.9	4.5	4.3	4.0	3.8
240 x 63	6.3	6.1	5.9	5.5	5.2	4.9	4.7	4.5
290 x 45	6.5	6.2	6.0	5.5	5.1	4.8	-	-
300 x 45	6.5	6.2	6.0	5.4	5.1	4.8	4.6	-
300 x 63	7.9	7.5	7.3	6.8	6.5	6.1	5.8	5.5
300 x 75	8.3	8.0	7.7	7.2	6.8	6.5	6.2	6.0
360 x 63	9.3	8.9	8.5	7.9	7.3	6.9	-	-

Shaded rows refer to hySPAN+. All other sections are hySPAN.

- See designIT for spans and bearings.
  Minimum bearing = 45 mm at end supports and 90 mm at internal supports for continuous span members.

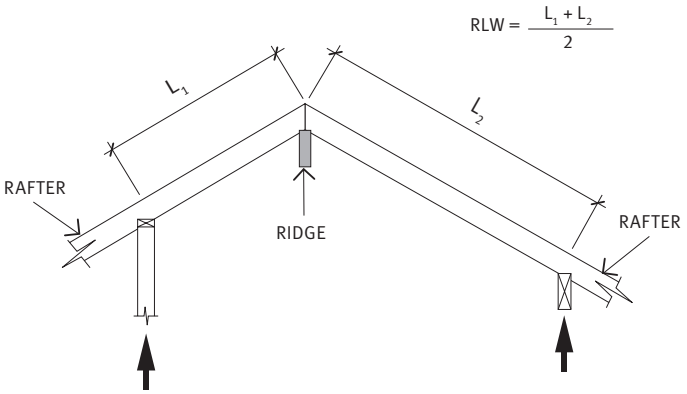

RIDGE BEAM

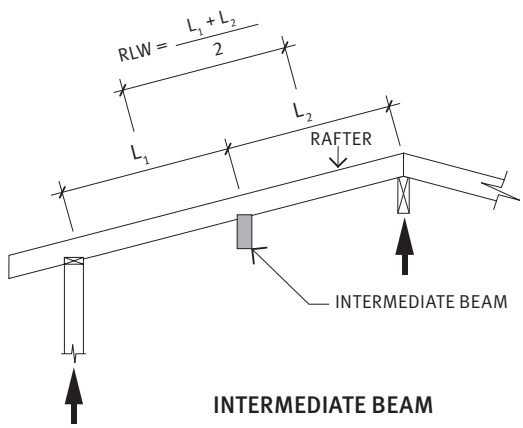

INTERMEDIATE BEAM

Optimised sizing from the full hySPAN range can be obtained using the free designIT software.
www.chhsoftware.com/designIT

Roof Beams

Ridge, Intermediate, Eave and Bressumer Beams

Table 16 continued

hySPAN SECTION D x B (mm)	TILED ROOF AND CEILING							
	ROOF LOAD WIDTH 'RLW' (m)							
	2.4	2.7	3.0	3.6	4.2	4.8	5.4	6.0
	MAXIMUM SINGLE SPAN (m)							
150 x 45	2.1	2.0	1.9	1.8	1.7	1.6	1.6	1.5
170 x 45	2.4	2.3	2.2	2.1	2.0	1.9	1.8	1.7
190 x 45	2.7	2.6	2.5	2.3	2.2	2.1	2.0	2.0
200 x 45	2.8	2.7	2.6	2.4	2.3	2.2	2.1	2.0
200 x 63	3.1	3.0	2.9	2.7	2.6	2.4	2.3	2.3
240 x 45	3.4	3.3	3.2	3.0	2.8	2.7	2.6	2.5
240 x 63	3.7	3.6	3.5	3.2	3.1	2.9	2.8	2.7
290 x 45	4.1	4.0	3.8	3.6	3.4	3.2	3.1	2.9
300 x 45	4.2	4.0	3.9	3.6	3.4	3.3	3.0	2.8
300 x 63	4.6	4.5	4.3	4.0	3.8	3.7	3.5	3.4
300 x 75	4.9	4.7	4.6	4.3	4.1	3.9	3.7	3.6
360 x 63	5.6	5.3	5.2	4.8	4.6	4.4	4.2	4.0(65)
400 x 63	6.2	5.9	5.7	5.4	5.1	4.9	4.7(65)	4.5(65)
400 x 75	6.5	6.3	6.0	5.7	5.4	5.1	4.9	4.8(65)
	MAXIMUM CONTINUOUS SPAN (m)							
150 x 45	2.8	2.7	2.6	2.4	2.3	2.2	2.1	1.9
170 x 45	3.2	3.1	2.9	2.8	2.6	2.5	2.3	2.2
190 x 45	3.6	3.5	3.4	3.2	3.0	2.7	2.6	2.4
200 x 45	3.7	3.6	3.5	3.3	3.1	2.8	2.7	2.5(105)
200 x 63	4.2	4.0	3.9	3.6	3.4	3.3	3.1	3.0
240 x 45	4.6	4.4	4.2	3.9	3.6	3.4(105)	3.2(135)	3.0(135)
240 x 63	5.0	4.8	4.6	4.3	4.1	3.9	3.8	3.5(105)
290 x 45	5.2	5.0	4.7	4.4(105)	4.0(105)	3.8(135)	3.6(135)	-
300 x 63	6.2	6.0	5.8	5.4	5.1(105)	4.9(105)	4.6(135)	4.3(135)
300 x 75	6.6	6.3	6.1	5.7	5.4	5.2(105)	5.0(105)	4.7(135)
360 x 63	7.4	7.1	6.8	6.3(105)	5.9(135)	5.5(135)	5.2(135)	-

Shaded rows refer to hySPAN+. All other sections are hySPAN.

- See designIT for spans and bearings.
  Minimum bearing = 50 mm at end supports and 100 mm at internal supports for continuous span members unless noted otherwise as SPAN(BEARING).

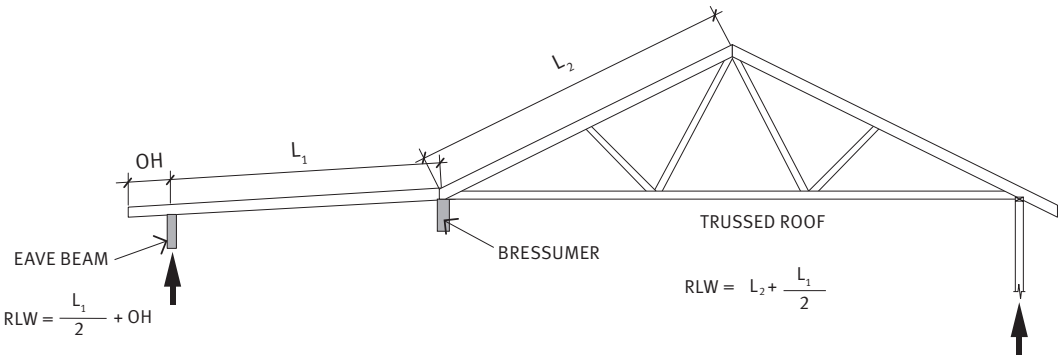

NOTES FOR BRESSUMER BEAMS

1. Bressumers are beams supporting roof loads over openings in walls
2. For cases where L_1 corresponds to a sheet roof and L_2 a tiled roof (including ceiling), then using the tile roof table take, $RLW = L_2 + \frac{40}{90}\left(\frac{L_1}{2}\right)$

EAVE AND BRESSUMER BEAM

Verandah Beams

Table 17

hySPAN SECTION D x B (mm)	ROOF MASS kg/m²	ROOF LOAD WIDTH 'RLW' (m)							
		0.9	1.5	2.1	2.7	0.9	1.5	2.1	2.7
		MAXIMUM SINGLE SPAN (m)				MAXIMUM CONTINUOUS SPAN (m)			
130 x 45	10	3.9	3.3	2.9	2.8	4.2	4.1	3.5	3.0
	20	3.5	3.0	2.7	2.5	4.2	4.0	3.5	3.2
	40	2.9	2.5	2.3	2.1	3.9	3.3	2.9	2.7
	90	2.3	1.9	1.7	1.6	3.1	2.6	2.3	2.1
140 x 45	10	4.2	3.6	3.2	3.0	5.0	4.4	3.9	3.3
	20	3.8	3.2	2.9	2.7	4.9	4.3	3.9	3.5
	40	3.2	2.7	2.5	2.4	4.2	3.6	3.2	2.9
	90	2.5	2.1	1.8	1.7	3.3	2.8	2.5	2.3
150 x 45	10	4.3	3.8	3.4	3.1	5.2	4.9	4.1	3.4
	20	4.0	3.4	3.0	2.8	5.0	4.4	4.1	3.5
	40	3.3	2.8	2.6	2.4	4.3	3.8	3.4	3.1
	90	2.6	2.2	2.0	1.8	3.6	3.0	2.6	2.4
150 x 63	10	4.9	4.3	3.8	3.5	5.7	5.3	4.8	4.2
	20	4.3	3.8	3.4	3.0	5.4	4.8	4.4	4.1
	40	3.7	3.1	2.8	2.7	4.7	4.2	3.8	3.4
	90	2.9	2.5	2.2	2.0	3.9	3.3	3.0	2.7
170 x 45	10	5.0	4.4	3.9	3.5	5.7	5.3	4.6	3.9
	20	4.4	3.8	3.4	3.1	5.5	4.9	4.4	4.0
	40	3.8	3.2	2.9	2.6	4.8	4.2	3.8	3.5
	90	3.0	2.5	2.2	2.0	4.0	3.3	3.0	2.7
170 x 63	10	5.2	4.8	4.3	4.0	6.2	5.8	5.3	4.8
	20	4.7	4.2	3.8	3.4	5.9	5.2	4.8	4.5
	40	4.1	3.5	3.2	2.9	5.1	4.5	4.2	3.9
	90	3.3	2.8	2.5	2.3	4.3	3.7	3.3	3.1
190 x 45	10	5.4	4.9	4.4	4.1	6.3	5.9	5.0	4.5
	20	4.9	4.3	3.9	3.5	6.0	5.3	4.9	4.6
	40	4.2	3.6	3.2	3.0	5.2	4.7	4.2	4.0
	90	3.4	2.9	2.6	2.4	4.4	3.8	3.4	3.1
200 x 45	10	5.5	5.0	4.5	4.2	6.5	6.0	5.1	4.6
	20	4.9	4.4	4.0	3.6	6.2	5.5	5.0	4.7
	40	4.3	3.7	3.3	3.0	5.3	4.8	4.3	4.1
	90	3.5	3.0	2.6	2.4	4.5	4.0	3.6	3.2
200 x 63	10	5.8	5.3	4.9	4.6	7.3	6.5	6.0	5.5
	20	5.3	4.8	4.3	4.1	6.5	5.9	5.4	5.1
	40	4.6	4.1	3.7	3.4	5.8	5.1	4.8	4.4
	90	3.9	3.3	2.9	2.7	4.8	4.3	3.9	3.6
240 x 45	10	6.3	5.7	5.2	4.9	7.8	6.9	5.8	5.2
	20	5.6	5.1	4.7	4.4	7.1	6.3	5.8	5.4
	40	5.0	4.4	4.0	3.7	6.2	5.5	5.1	4.8
	90	4.2	3.6	3.2	2.9	5.2	4.6	4.2	4.0
240 x 63	10	6.5	5.9	5.5	5.2	8.1	7.4	6.8	6.4
	20	5.9	5.3	5.0	4.7	7.4	6.7	6.2	5.8
	40	5.3	4.7	4.4	4.1	6.5	5.9	5.4	5.1
	90	4.4	3.9	3.5	3.2	5.5	4.9	4.5	4.2

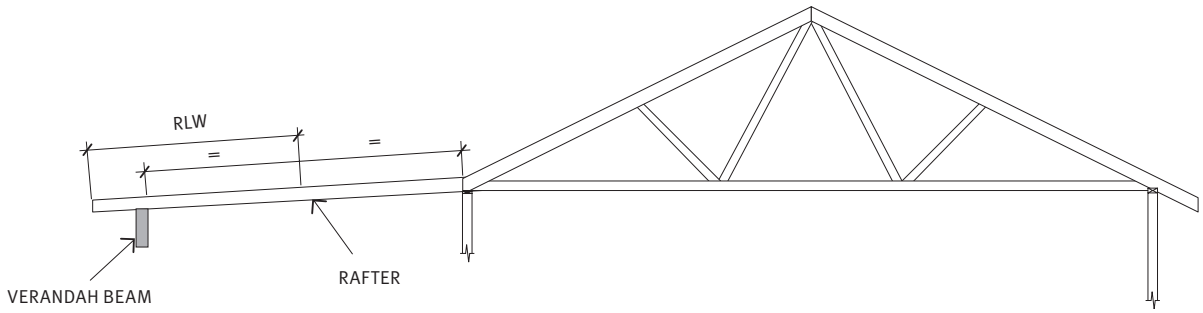

Optimised sizing from the full hySPAN range can be obtained using the free designIT software.
www.chhsoftware.com/designIT

Garage Roof Pitching Beams

For Trussed or Pitched Roofs

Table 18

hySPAN SECTION D x B (mm)	SHEET ROOF AND CEILING								
	ROOF LOAD WIDTH 'RLW' (m)								
	2.4	2.7	3.0	3.6	4.2	4.8	5.4	6.0	6.6
	MAXIMUM SINGLE SPAN (m)								
190 x 45	3.4	3.2	3.1	2.9	2.8	2.7	2.6	2.5	2.5
200 x 45	3.5	3.3	3.2	3.0	2.9	2.7	2.6	2.6	2.5
200 x 63	3.9	3.7	3.6	3.4	3.2	3.0	2.9	2.8	2.7
240 x 45	4.3	4.1	3.9	3.7	3.5	3.3	3.2	3.0	2.9
240 x 63	4.7	4.5	4.3	4.1	3.8	3.6	3.4	3.3	3.2
290 x 45	5.0	4.9	4.7	4.5	4.2	4.0	3.8	3.6	3.5
300 x 45	5.1	4.9	4.8	4.5	4.3	4.1	3.8	3.7	3.5
300 x 63	5.4	5.3	5.1	4.9	4.7	4.5	4.4	4.1	4.0
360 x 63	6.2	6.0	5.9	5.6	5.4	5.2	5.0	4.9	4.8
400 x 45	6.2	5.9	5.6	5.1	4.6	4.3	4.0	3.8	3.6
400 x 63	6.7	6.5	6.3	6.0	5.8	5.6	5.4	5.3	5.1
450 x 63	7.3	7.1	7.0	6.6	6.4	6.1	5.9	5.7	5.5
	MAXIMUM CONTINUOUS SPAN (m)								
190 x 45	4.5	4.4	4.2	3.9	3.7	3.5	3.4	3.2	3.1
200 x 45	4.7	4.5	4.3	4.1	3.8	3.6	3.5	3.3	3.2
200 x 63	5.1	4.9	4.8	4.5	4.3	4.1	3.9	3.7	3.6
240 x 45	5.4	5.2	5.1	4.9	4.7	4.5	4.2	4.0	3.8
240 x 63	5.8	5.6	5.4	5.2	5.0	4.8	4.6	4.5	4.3
290 x 45	6.2	6.1	5.9	5.6	5.3	5.1	4.9	4.7	4.4#
300 x 45	6.3	6.1	6.0	5.6	5.3	5.1	4.9	4.7	4.4#
300 x 63	6.8	6.6	6.4	6.1	5.9	5.7	5.5	5.3	5.1
360 x 63	7.7	7.5	7.3	7.0	6.7	6.5	6.3	6.1	5.9#
400 x 45	7.6	7.3	7.1	6.6	6.1	5.8	5.4	5.1#	4.9#
400 x 63	8.4	8.2	7.9	7.5	7.3	7.0	6.7	6.5	6.4#
450 x 63	9.1	8.8	8.6	8.3	7.9	7.6	7.4#	7.2#	6.9#

Shaded rows refer to hySPAN+. All other sections are hySPAN.
- See designIT for spans and bearings.
Indicated minimum end bearing 65 mm and an internal bearing of 140 mm.

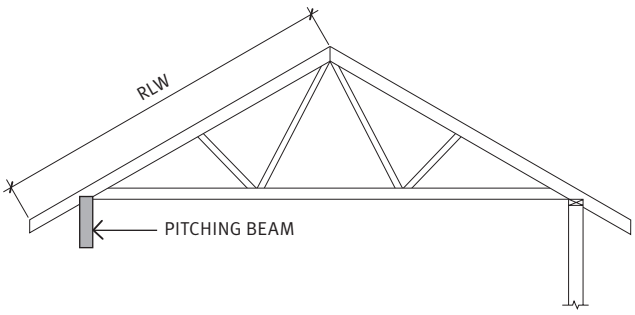

Garage Roof Pitching Beams

For Trussed or Pitched Roofs

Table 18 continued

hySPAN SECTION D x B (mm)	TILED ROOF AND CEILING								
	ROOF LOAD WIDTH 'RLW' (m)								
	2.4	2.7	3.0	3.6	4.2	4.8	5.4	6.0	6.6
	MAXIMUM SINGLE SPAN (m)								
190 x 45	2.7	2.6	2.5	2.4	2.2	2.1	2.0	1.9	1.8
200 x 45	2.7	2.6	2.6	2.4	2.3	2.2	2.1	2.0	1.9
200 x 63	3.1	2.9	2.8	2.7	2.5	2.4	2.3	2.2	2.2
240 x 45	3.4	3.2	3.1	2.9	2.8	2.7	2.6	2.5	2.4
240 x 63	3.7	3.6	3.4	3.2	3.0	2.9	2.8	2.7	2.6
290 x 45	4.1	3.9	3.8	3.6	3.4	3.2	3.1	3.0	2.9
300 x 45	4.1	4.0	3.8	3.6	3.4	3.2	3.1	3.0	2.9
300 x 63	4.6	4.4	4.3	4.0	3.8	3.6	3.5	3.4	3.2
360 x 63	5.2	5.1	5.0	4.7	4.6	4.4	4.2	4.0	3.9(65)
400 x 63	5.7	5.5	5.4	5.1	4.9	4.7	4.6	4.5(65)	4.3(65)
450 x 63	6.2	6.0	5.9	5.6	5.4	5.2	5.0(65)	4.9(65)	4.8(65)
	MAXIMUM CONTINUOUS SPAN (m)								
190 x 45	3.6	3.4	3.3	3.1	3.0	2.8	2.6	2.5#	2.4#
200 x 45	3.7	3.6	3.4	3.2	3.0	2.8	2.7	2.5#	2.4#
200 x 63	4.1	4.0	3.8	3.6	3.4	3.2	3.1	3.0	2.8
240 x 45	4.5	4.4	4.2	3.9	3.6	3.4#	3.2#	3.0#	2.9#
240 x 63	4.8	4.7	4.5	4.3	4.1	3.9	3.7	3.6#	3.4#
290 x 45	5.2	5.0	4.8	4.4#	4.1#	3.8#	3.7#	3.5#	-
300 x 63	5.7	5.5	5.4	5.1	4.9	4.8#	4.6#	4.3#	4.1#
360 x 63	6.5	6.3	6.2	5.9#	5.6#	5.4#	5.2#	5.0#	-

Shaded rows refer to hySPAN+. All other sections are hySPAN.
- See designIT for spans and bearings.
Indicated minimum end bearing 65 mm and an internal bearing of 140 mm.
Minimum bearing 45 mm at end supports unless noted otherwise SPAN(BEARING) and 90 mm at internal supports for continuous span members.

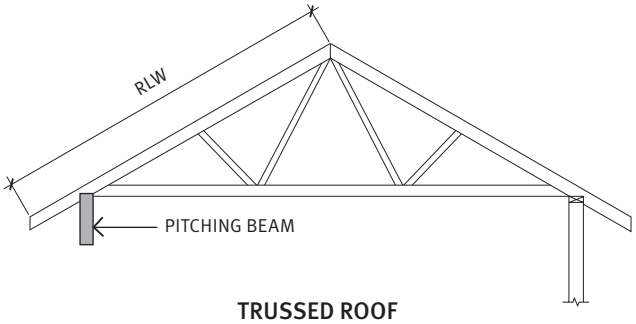

TRUSSED ROOF

designit for houses
Optimised sizing from the full hySPAN range can be obtained using the free designIT software.
www.chhsoftware.com/designIT

Common Installation Details (for residential framing)

The following common hySPAN installation details should be followed where required. Further advice can be found in the installation details section of the Carter Holt Harvey designIT software.

VERTICAL NAIL LAMINATION

Section Size "B"	Minimum Nail Dia	Minimum Nail Length
35	3.06 mm	75 mm
45	3.30 mm	90 mm
63	3.30 mm	100 mm

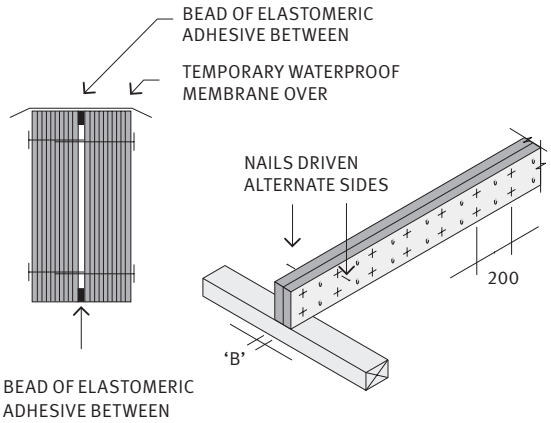

DETAIL H1

CHAMFER OF hySPAN AT SUPPORTS

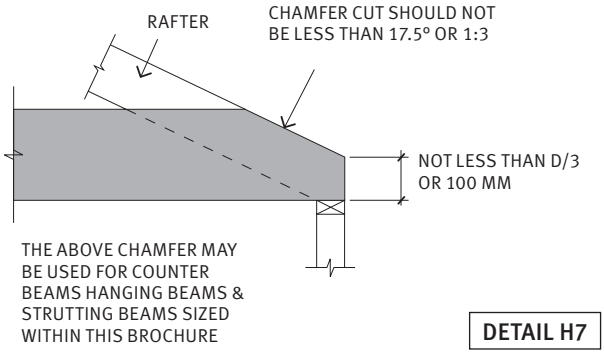

DETAIL H7

END RESTRAINT FOR STRUTTING BEAMS – STRUTTING BEAM PARALLEL TO CEILING JOISTS

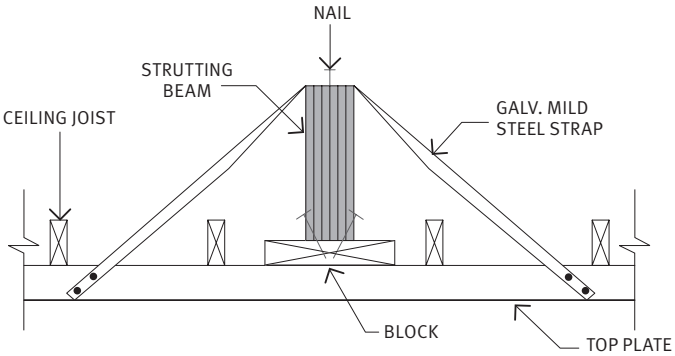

DETAIL H8

END RESTRAINT FOR STRUTTING BEAMS – STRUTTING BEAM PERPENDICULAR TO CEILING JOISTS

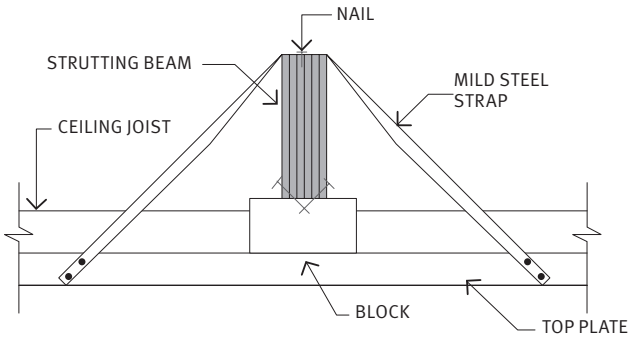

DETAIL H9

STRUTTING BEAM INTERMEDIATE RESTRAINT – STRUTTING BEAM PARALLEL WITH UNDERPURLIN

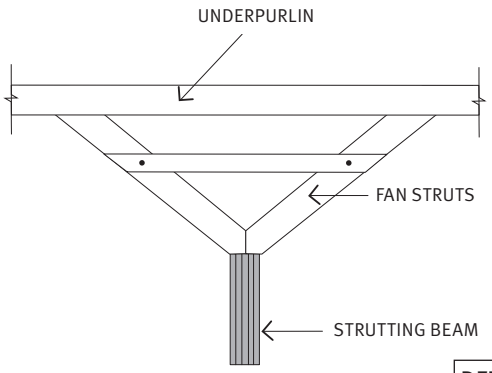

DETAIL H10

STRUTTING BEAM INTERMEDIATE RESTRAINT – STRUTTING BEAM PERPENDICULAR TO UNDERPURLINS

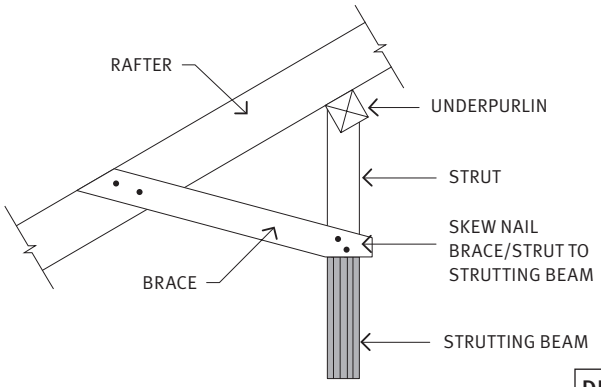

DETAIL H11

RAFTER OVERHANG

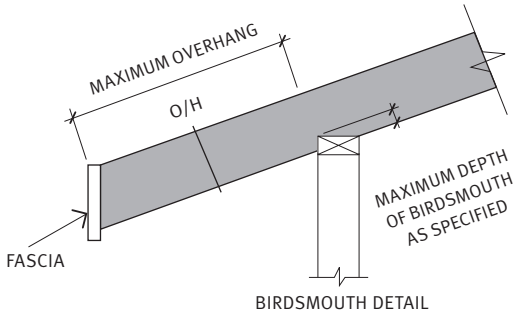

DETAIL H12

Notches, cuts and holes in beams, bearers, joists and rafters

Notches, cuts and holes in beams, bearers, joists and rafter members specified within this brochure may have penetrations and notches performed in accordance with AS1684.2, Clause 4.1.6 and Figure 4.1. Guidance for the common holes through the thickness and depth is provided below.

HOLE THROUGH THICKNESS

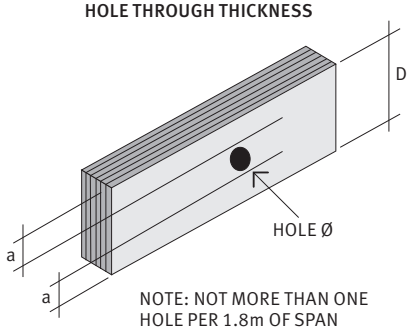

HOLE THROUGH CENTER OF DEPTH

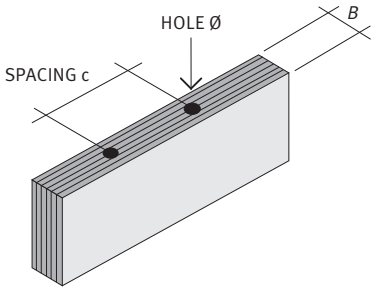

Member Depth 'D'	Min. distance from edge 'a'	Maximum Hole Size 'Ø'
‹200mm	D/3	D/4
›=200mm	50mm	50mm

Member Breadth 'B'	Maximum Hole Size 'Ø'	Min. Hole Spacing 'c'
35mm	8mm	250mm
45mm	10mm	300mm
63mm	14mm	400mm
75mm	16mm	500mm

Connections

Section 9 of AS1684 contains both nominal and common specific tie-down and fixing details for timber members throughout residential constructions. When applying specific connections to hySPAN, joint group JD4 shall be used.

designIT for houses
Optimised sizing from the full hySPAN range can be obtained using the free designIT software.
www.chhsoftware.com/designIT

hySPAN & hySPAN+ Specification

Characterisation:
Tested and characteristic values determined in accordance with AS/NZS 4357:2005 Structural Laminated Veneer Lumber. Design Characteristic Values determined in accordance with AS/NZS 4063.2:2010 Section 4.

Veneer Species: Radiata Pine or Douglas Fir

Joints: Face Scarf or lap
Other Scarf, lap or butt

Density: 560 – 650 kg/m³
Adhesive and bond: Phenolic adhesive. Type 'A' (marine) bond. Refer AS/NZS 2098 & AS 2754.

Finish: Unsanded faces and sawn edges

Quality Assurance: Third party audited process control and product certified

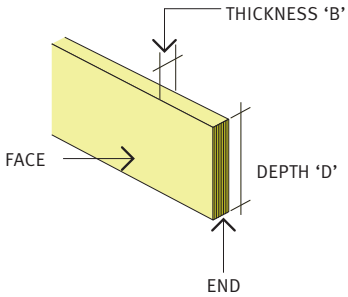

hySPAN traditional size range

hySPAN solutions range†			
35 mm	45 mm	63 mm	75 mm
Section Depth			
90	90	90	-
120	120	-	
130	130	130	-
140	140	-	
150	150	150	150
170	170	170	-
190	190	-	
200	200	200	-
240	240	240	-
290	290	-	
-	300	300	300
-	360	360	-
-	400	400	400
-	-	450	-
-	-	-	525
-	-	600	600

hySPAN+ (F17 graded LVL) **hySPAN**
Available in both **hySPAN+** and **hySPAN**

†Available H2-S Termite Treated and Untreated

Dimensions and Shape:

Length Tolerance		-10	+30 mm
Depth	(‹400)	-0,	+2 mm
Depth	(›400)	-0,	+5 mm
Thickness			
	hySPAN	-0,	+3 mm
	hySPAN+	-2,	+3 mm
Spring & Bow		1/1000	
Squareness		‹ 1%	
Twist		(Length x Width) / (3500 x Thickness)	
Cupping		No Limit	

Moisture Content: 7-15%

Natural Durability: Class 4 refer AS 1684 -1999

Treatment: Manufactured both untreated and H2-S treated. LOSP Treatment available through distributors

Structural Design: AS 1720.1:2010 Timber Structures

Capacity Factors (ø): Refer AS 1720.1:2010 tables 2.1 and 2.2 for Structural LVL

Joint Group: For bolts: JD3
For nails and screws: JD4
For nail-plates refer to nail plate manufacturer

Intended application: General beams on edge

For on flat specification or use call the CHH Woodproducts Market Support Service freecall 1800 808 131.

Design Properties, Brand and Stress Grade

Brand & Stress Grade	Characteristic strength MPa					Modulus of Elasticity MPa	Modulus of Rigidity MPa
	Bending (f_b)[1]	Tension Parallel to Grain (f_t)[2]	Shear in Beams (f_s)	Compression Parallel to Grain (f_c)	Compression Perpendicular to Grain (f_p)	(E)	(G)
hySPAN	$50 \times (95/d)^{0.154}$	25	4.6	41	12	13200	660
hySPAN +	$50 \times (95/d)^{0.154}$	25	4.6	41	12	14000	700

1 f'b is the design characteristic value in bending for beams of depth, d (mm) where d › 95 mm. For depths less than 95 mm f'b = 50 MPa.
2 The tension strength above applies for tension members with depth, d (mm) not greater than 150 mm. For depths greater than 150 mm the design characteristic values are obtained by multiplying by $(150 / d)^{0.167}$ =, where d is the largest dimension of the cross section.

Save time and money with better support

Fast technical support ☎1800 808 131

For quick, clear product answers, our technical support phone line – 1800 808 131 – links you to our expanded, engineering support team. Our experienced support team can assist with enquiries ranging from beam sizing to installation advice. It's fast, easy and it's free.

designIT for houses

Powerful building design software

designIT® software is a powerful tool for all building practitioners to quickly and simply design more economical floor, wall and roof member layouts. designIT has been recently upgraded and the enhancements include:

- Beam sizing grouped in floor, wall and roofing applications
- Stud design, including design of notched studs along with top and bottom wall plates
- Reaction and serviceability reports - detailed reports for every member
- Increased design options for a range of building materials

Quick and simple to use yet deceptively powerful software.

Save time and money - download designIT FREE at www.chhsoftware.com/designIT

FREE

designIT site

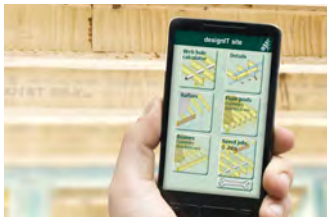

Design it now on site

designIT site is a slim version of designIT for houses customised for use on site. designIT site allows building practitioners to quickly and simply:

- Calculate holes in hyJOIST for services
- Find common fixing details
- Specify common rafter overhang details
- Check bearer, joist and rafter design

Available on the App Store

ANDROID APP ON Google play

Save time on site - download designIT site FREE.

For more visit www.chhsoftware.com/apps

Product Certification – your guarantee of quality

Carter Holt Harvey Woodproducts is committed to manufacturing innovative engineered building products. The hySPAN range has independent audited third party processes and product certification, which gives the specifier peace of mind.

Available from:

DINDAS australia

VICTORIA
58 Whiteside Road
Clayton South VIC 3169
Ph: 03 8540 0500
Fx: 03 8540 0599
vicsales@dindas.com.au

NEW SOUTH WALES
138 Dunheved Circuit
St. Mary's NSW 2760
Ph: 02 9673 8000
Fx: 02 9673 8099
nswsales@dindas.com.au

QUEENSLAND
433 Wondall Road
Tingalpa QLD 4173
Ph: 07 3249 9888
Fx: 07 3390 8382
qldsales@dindas.com.au

Technical Support
☎ **1800 808 131**
chhwoodproducts.com.au/hyspan

© October 2012 ® Registered Trademarks of Carter Holt Harvey Woodproducts Australia Pty Limited ABN 93 002 993 106 Date of Publication October 2012 iezziG462