Webster®

Bulletin FU40-3
October 1998

'V' SERIES

Single & Two Stage High Capacity Fuel Pumps

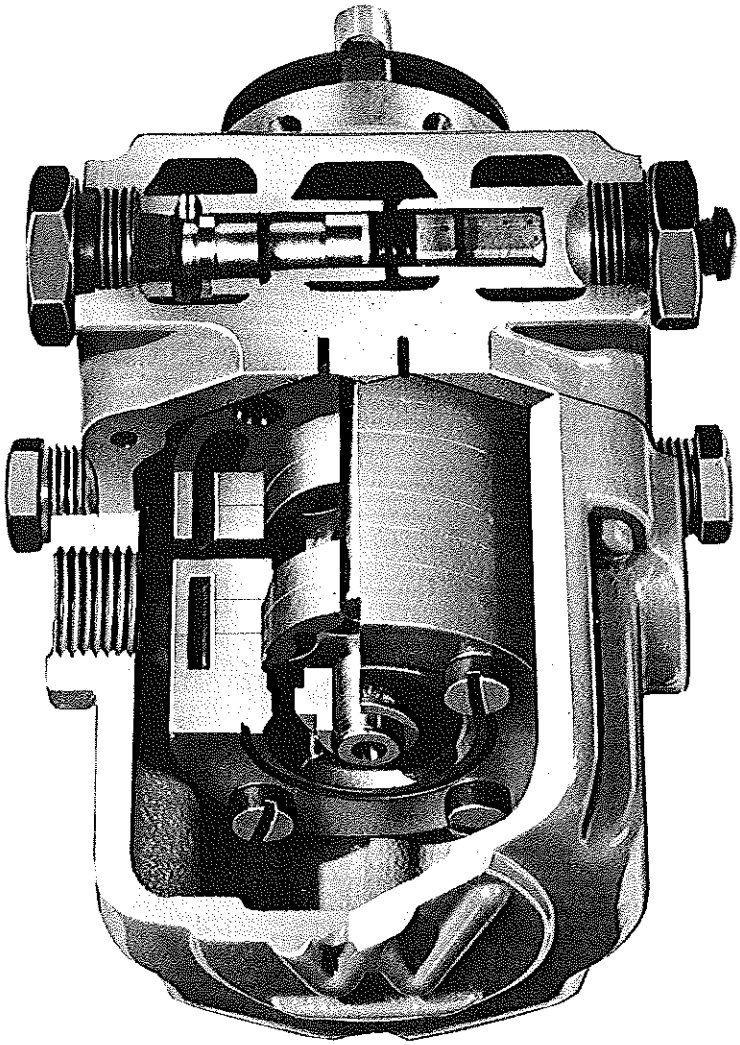

Webster®
Fuel Pumps & Valves
Div of Capital City Tool Inc.
219 Hahn Drive
Frankfort, Ky. 40601
Tele: 800.766.1233 Fax: 502.223.4629 www.websterfuelpumps.com

Extremely Quiet — EXCLUSIVE DESIGN
Single & Two Stage
Self Venting
Transfer rates to 270 GPH (with 1000SSU Oil)
Pressures to 300 PSI
Speeds to 3450 RPM
Handles Light to Heavy Oil 34 to 1000SSU
Flange Mounting
Internal Regulation (100 & 300 PSI)
Double Lip Seal for Hydraulic Transient Protection
U/L Listed

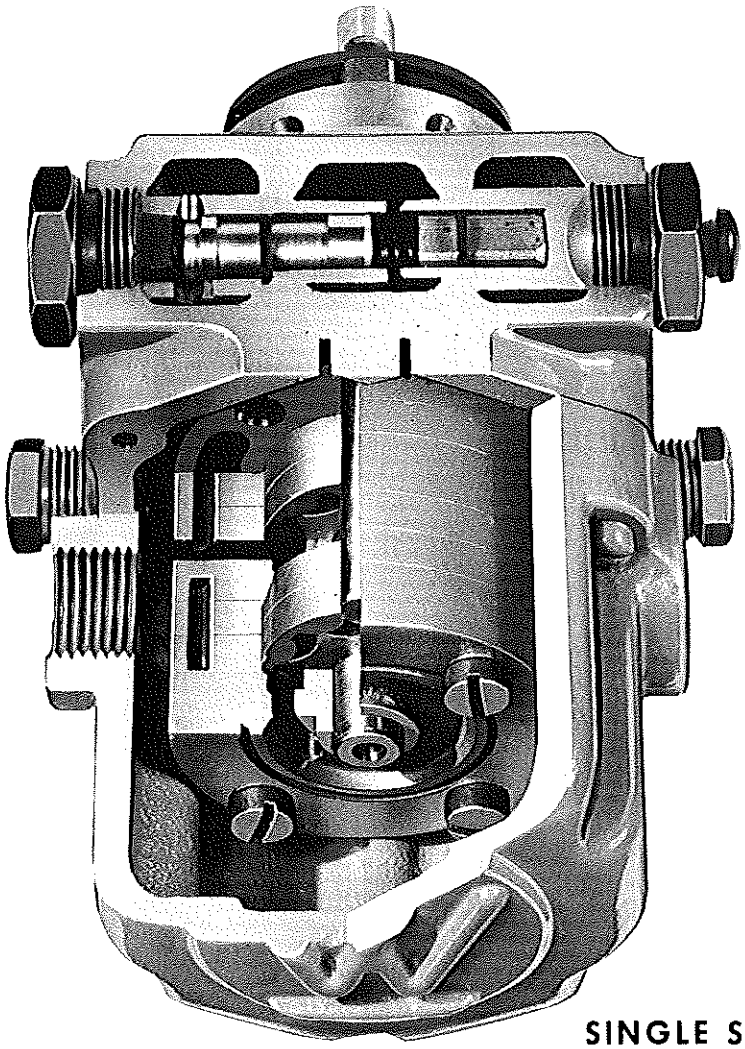

SINGLE STAGE

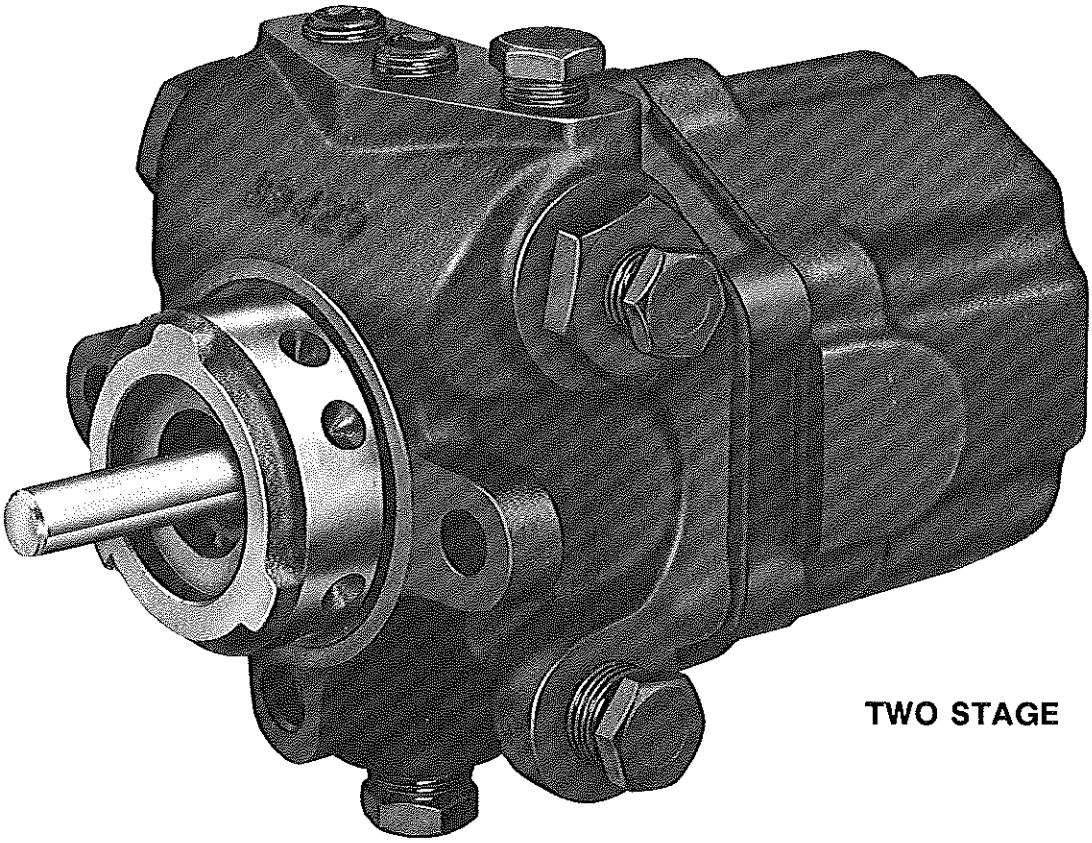

TWO STAGE

Quietness Designed in:
The Webster 'V' Series Fuel Pumps were specifically designed to meet the high delivery requirements of commercial, industrial and institutional systems — and with a minimum of mechanical and hydraulic noise. To meet these requirements, Webster engineers chose to use inherently quiet, precision ground, gerotor type gears in place of spur gears commonly used in high capacity units. Each pump stage is made up of two gear sets displaced from each other by ½ cycle providing a pulse cancellation oil flow, further insuring the quiet operation demanded by hospitals, nursing homes and apartments.

Large Capacity—Hi-Lift:
Single and **two** stage models are available for two pipe operation. The single stage units provide a transfer rate as high as 270 GPH (with 1000 SSU oil) at up to 10" Hg inlet vacuum. Two stage transfer rates are as high as 205 GPH (with 1000 SSU oil) at up to 15" Hg inlet vacuum. See chart page 4.

Dependable Pressure Regulation:
When used for direct firing, the 'V' series incorporate an integral regulating valve. These precision machined valves are factory pre-set for 100 or 300 PSI operation and can be easily readjusted in the field to meet a specific system requirement. Models are also available without the built-in valve for use as supply or transfer pumps. In all cases separate valves are required for nozzle shut-off.

Long Life Design:
The precision ground shaft runs in three large heavy duty bearings — five in the two stage models — extending pump life and reducing shaft noise. A double lip shaft seal eliminates leakage due to transient pressures while excluding damaging foreign matter. All parts are housed in a fine grained cast iron accurately machined body which provides excellent noise dampening to assure quiet operation.

Versatility In Application
These pumps may be either flange or hub mounted to any standard burner. Optional porting simplifies piping. (See Fig. 2) "V" series pumps can be used over a wide range of speeds and flow rates. The series however, does not incorporate an internal filter. An adequately sized inlet line filter must be used where filtering is indicated. (See Fig. 1) Inlet vacuum measured at the pump inlet must not exceed 10" Hg for single stage models, or 15" Hg for two stage versions. Webster "V" series pumps are UL listed.

Installation Note
DO NOT USE TEFLON TAPE. It tends to break, depositing small pieces in critical internal areas of the fuel unit. Therefore, use of teflon tape will void all warranties.

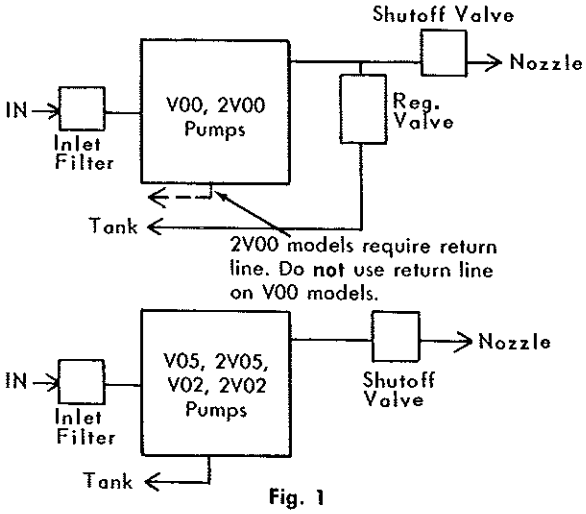

Fig. 1

Note: Max. Recommended Firing Rates apply to 10" Hg for Single Stage Units and 15" Hg for Two Stage Units.

	Shaft RPM	Max. Recommended Firing Rate GPH 34SSU		Max. Recommended Firing Rate GPH 1000SU		Inlet Line Sizing Requirement GPH 34SSU thru 1000SSU		Recommended Motor H.P. 34SSU		Recommended Motor H.P. 1000SSU		Dim. A
		1725	3450	1725	3450	1725	3450	1725	3450	1725	3450	
V08, V05 & V02 SERIES SINGLE STAGE FUEL PUMPS (WITH INTERNAL REGULATION)												
100 PSI Ratings	V052C-4D020	40	75	65	135	65	135	.25	.33	.25	.75	5.13
	V056C-4D020	130	—	190	—	190	—	.50	—	.75	—	5.13
300 PSI Ratings	V022C-4D020	20	60	50	120	50	120	.50	.75	.50	1.0	5.13
	V023C-4D020	40	105	80	185	80	185	.50	1.00	.50	1.5	5.13
	V024C-4D020	60	140	110	240	110	240	.75	1.5	.75	2.0	5.13
	V026C-4D020	95	—	155	—	155	—	1.0	—	1.0	—	5.13
	V028C-4D020	115	—	190	—	190	—	1.5	—	2.0	—	5.67
80 PSI Ratings	V086C-4D020	135	—	190	—	250	—	.33	—	.75	—	7.75
2V02 SERIES TWO STAGE FUEL PUMPS (WITH INTERNAL REGULATION)												
300 PSI Ratings	2V022C-5D020	20	60	50	120	100	205	.50	1.0	.50	1.5	5.67
	2V023C-5D020	40	105	80	185	140	270	.75	1.5	.75	2.0	6.17
	2V024C-5D020	60	—	110	—	200	—	.75	—	1.0	—	6.71
	2V026C-5D020	95	—	155	—	250	—	1.5	—	1.5	—	7.75
V00 SERIES SINGLE STAGE TRANSFER PUMPS (WITH NO INTERNAL REGULATION)												
20 PSI Ratings*	V002C-4D0	45	85	70	140	70	140	.25	.25	.25	.50	5.13
	V003C-4D0	70	140	100	205	100	205	.25	.25	.25	.75	5.13
	V004C-4D0	95	175	140	270	140	270	.25	.25	.25	.75	5.13
	V006C-4D0	145	—	200	—	200	—	.25	—	.50	—	5.13

*Operating pressure to 300PSI permissible (using external regulating valve).
V00 Series GPH & HP ratings at 100 PSI same as V05 ratings above.
V00 Series GPH & HP ratings at 300 PSI same as V02 ratings above.

2V00 SERIES TWO STAGE TRANSFER PUMPS (WITH NO INTERNAL REGULATION)

20 PSI Ratings*	2V006C-5D0	145	—	200	—	250	—	.33	—	.75	—	7.75

*Operating pressure to 300 PSI permissible (using external regulating valve).
2V00 Series GPH & HP ratings at 300 PSI same as 2V02 ratings above.

2V08 SERIES SUPPLY PUMP (WITH INTERNAL REGULATION)

80 PSI Ratings	2V086C-5D04	135	—	190	—	250	—	.50	—	1.0	—	7.75

DIMENSIONS

Fig. 2 Nozzle Location & Shaft Rotation (As viewed from shaft end)

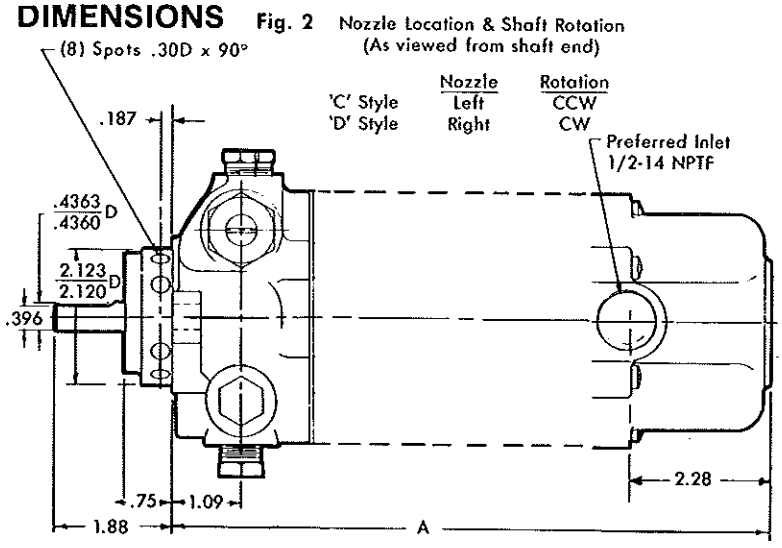

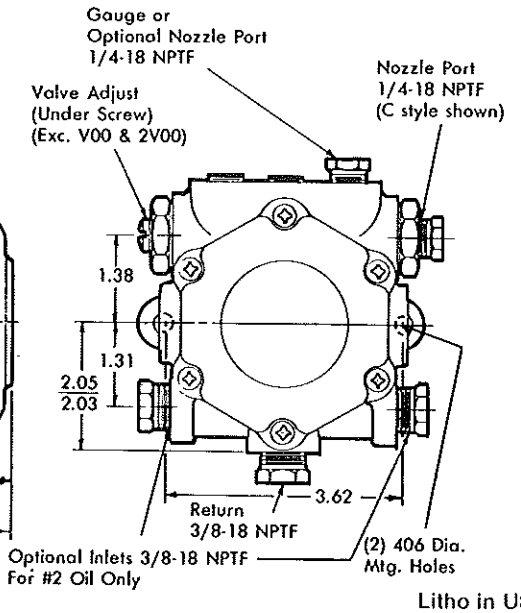

Note: To assure compliance with National Fire Protection Association's bulletin 31, "Installation of Oil Burning Equipment," fuel unit inlet pressure should not exceed 3 psig.

Litho in USA
11/82

INSTALLATION DATA

V Series pumps are shipped from the factory set for two-pipe operation. They are not recommended for use in one-pipe systems (except series V00, see Note 1).

IMPORTANT: Do not loosen or try to tighten any pump plugs not to be used in the installation. NON-HARDENING OIL PIPE DOPE IS RECOMMENDED for use on the threads of all fittings. Teflon tapes or paste must be used with care to prevent depositing tape pieces or fibers into critical internal areas of the pump. Reduced torques must be used with teflon materials to avoid thread or casting damage. EVIDENCE OF TEFLON MATERIAL IN INTERNAL AREAS OF THE FUEL-UNIT WILL BE CAUSE TO VOID WARRANTY.

V00, 2V00 SERIES WITH NO INTERNAL REGULATION

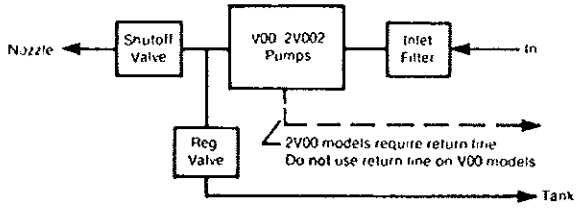

V0, 2V0 SERIES WITH INTERNAL REGULATION

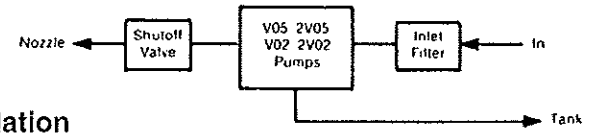

Installation

1. Connect inlet line to preferred INLET PORT. Use of inlet in cover is recommended for minimum inlet vacuum loss. Connect nozzle line to nozzle port.

2. Connect return line to preferred RETURN PORT except on V00 pumps. Use of bottom return is recommended to minimize back pressure. Top return port not recommended for oil heavier than #2.

3. Plug all unused ports securely.

4. Start burner. Two-stage and most one-stage pumps will self-vent. V00 with shut-off valve in nozzle line may have to be vented manually by loosening GAGE PORT plug. Tighten plug securely when oil flows clear.

Installation Notes:

"Fuel unit inlet pressures should not exceed 3 psig in order to comply with National Fire Protection Association's Bulletin 31."

To assure maximum performance, INLET VACUUM, measured at unused INLET PORT, should not exceed 10" Hg on single-stage pumps or 15" Hg on two-stage pumps.

NOTE: Max Recommended Firing Rates apply to 10" Hg for single-stage units and 15" Hg for two-stage units.

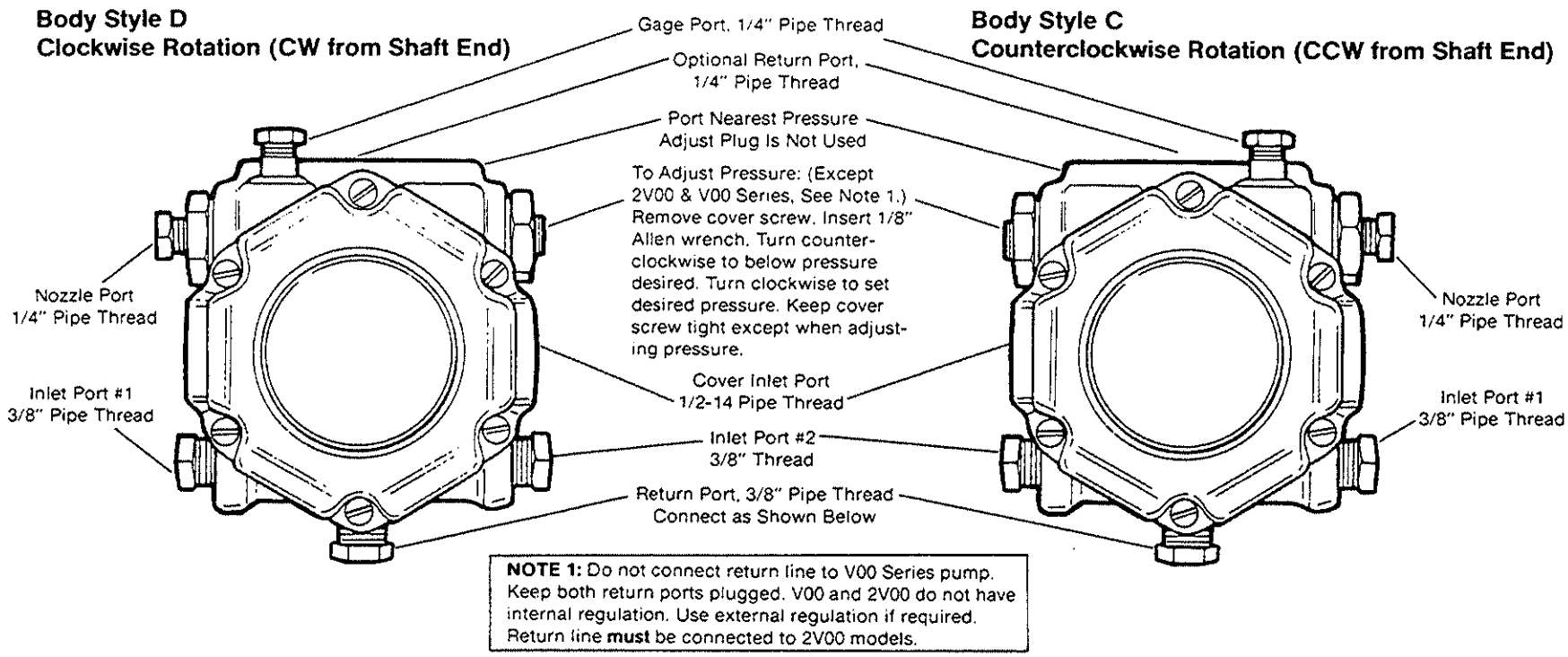

NOTE 1: Do not connect return line to V00 Series pump. Keep both return ports plugged. V00 and 2V00 do not have internal regulation. Use external regulation if required. Return line **must** be connected to 2V00 models.