CLICK ANYWHERE on THIS PAGE to RETURN to OVERHEAD ELECTRICAL SERVICE INFO at InspectApedia

SECTION 4

GENERAL

Line Work 4-3-1
Customer Attachments on Company Poles 4-3-2

SERVICE DROPS

Attachment Guidelines ..... 4-4-1 to 4-4-4
Service Drop Vertical Clearances 4-4-5
Pool Clearances 4-4-5.1
Residential Clearances 4-4-6
Nailed Service Bolts 4-4-7
Service Through Bolts 4-4-8
Insulators, Racks, and Spools ..... 4-4-15 and 4-4-16
Risers ..... 4-4-21 to 4-4-48
Support Poles ..... 4-4-49 and 4-4-50

SERVICE ENTRANCE EQUIPMENT

Overhead Service Terminal Cabinet 4-7-1

OUTDOOR SERVICES

Temporary Service ..... 4-8-1 and 4-8-2
Permanent Service ..... 4-9-1 and 4-9-2
Outdoor Service--400 to 800 Amps 4-10-1
Farm Service ..... 4-11-1 to 4-11-4

EMERGENCY POWER SUPPLIES

Standby Electric Generator ..... 4-12-1 and 4-12-2

LINE WORK

1. Definitions.

(a) Temporary Service. Service for a use that may be of short duration such as a construction site, carnival, or Christmas tree sales lot is considered temporary service. Such service may require a line extension, transformer installation, or other construction work by the Company. Consult the DTE Electric Planner. Avoid building temporary meter stanchions that do not comply with DTE requirements.

(b) Emergency Service. Service for a customer whose generation or prime mover has failed is considered emergency service. Such service is offered only in conjunction with a five-year agreement under the provisions of *Standard Contract Rider No. 3* in the *Schedule of Rates*. Any inquiry or situation relating to this condition should be referred to Regulated Marketing-Major Accounts.

2. General Policy.

a) **Residential Services.** All new, relocated or upgraded residential service connections shall be installed as underground residential service laterals at the customer's expense.

b) **Installation and Removal.** The Company furnishes temporary or emergency service if capacity is available and if the customer pays for the installation and removal as well as any metering that may be involved. Generally, this service is intended for short-term use only. The charge for installation and removal is in addition to the cost of metered service. In the instance of service involving the disablement of the customer's generation or prime mover, Regulated Marketing-Major Accounts should be contacted first for application of Standby Service Rider No. 3.

c) **Temporary Classifications.** The following businesses are normally considered to have a temporary classification; however, if the facilities on the property indicate that the installation should be considered permanent, discuss the situation with the Planning Area Leader.

Asphalt Plants	Gravel Pits
Carnivals, Bandstands	Outdoor Advertising Signs
Bicycle Rental Lots	Parking Lots, Used Car Lots
Boat Wells	Portable Classrooms, Real Estate Offices/ Trailer
Christmas Tree Sales Lots	Refreshment Stands
Construction Trailers	Retail Markets without Permanent Buildings
Fruit Markets, Gospel Tents	Temporary Bank Offices

d) **Cost Estimates.** The Company will provide a cost estimate to the customer for the installation and removal of temporary service equipment after pertinent information is secured such as location, loads, etc. Consult the DTE Electric Planner.

e) Refer to section 3 and 4 for specific temporary service construction installations & metering equipment.

CUSTOMER ATTACHMENTS ON COMPANY POLES

1. Customer-owned wires and equipment that are used in connection with DTE Electric service to that customer are permitted on Company poles to a limited extent as covered by Company specifications. These specifications include attachments of farm customers, certain installations on private property, underground services, and temporary services. Ordinarily, no rental charge is made for such attachments.

2. In general, customer attachments not included in DTE Electric specifications are not permitted on Company poles. Special attachment permits may be granted in exceptional cases. Consult the DTE Electric Planner.

SERVICE DROP ATTACHMENTS

1. Specifications.

(a) When permitted by MPSC rules, DTE Electric is prepared to make overhead service drop attachments to buildings. The Company reserves the right to deny connection to improperly installed service entrance equipment. See 2a from 4-3-1

(b) A service drop shall be attached only to that part of a building that is of sufficient strength to withstand the tension of the drop.

(c) Contractor furnishes and installs a service bolt or through bolt as a means of attachment. Other acceptable methods of attachment are illustrated in this section.

(d) Service drop attachments will not be made to customer owned steel poles, pipes, structural steel shapes, wood timbers, etc., which depend on the ground for support. Such construction may require that the Company set a wood pole 3 to 5 feet away from these members so that a lineman can connect the customer's wire while working from the wood pole.

(e) Service drop attachments shall not be located on chimneys, firewalls, or parapet walls extending above the roofline.

(f) When a building is not of sufficient height, a service riser will be necessary to achieve the proper service drop clearance.

(g) It is the responsibility of the DTE Electric Planner to determine the necessity of installing a service pole.

(h) Service risers are furnished and installed by the contractor. All service risers and their application must comply with the rules of the inspection authority having jurisdiction and with specifications acceptable to DTE Electric.

(i) When the wall of a building does not have sufficient strength for the tension of the service drop or for support of a riser, the Company will provide the tension requirements of the drop to those responsible for the building construction. This is to insure that an adequate means for dead-ending the service drop will be designed into the structure.

(j) It is the responsibility of the DTE Electric Planner to see that services are installed in accordance with Company guidelines, applicable codes, and local ordinances regarding attachment, location, and clearance.

(k) DTE Electric retains the right to request written permission from the authority having jurisdiction before construction begins on any installation that deviates from specifications found in this manual. Any additional cost of special ordered equipment will be borne by the customer.

2. Location of Service Attachment Point.

(a) The point of attachment of a service drop to a building shall be at a height sufficient to permit proper service drop clearances. (See page 4-4-5.)

(b) Service drop attachment points shall be not more than 30 feet above grade.

(c) The service riser shall be located on the outside wall of the building nearest the pole from which the service drop will be installed. *Risers will not be concealed or recessed into building walls.*

(d) The service attachment point shall be located so that the customer's service entrance conductors can be conveniently tapped without training along the building, over the roof, or climbing on the roof. It may be necessary for a lineman to climb on a roof to attach the drop where a service riser extends through a roof with a wide overhang.

3. Damage to Customer's Property.

DTE Electric accepts no responsibility for water or other damage caused by service drop attachments, risers, guy back anchors, or other means used to terminate a service drop through or on a roof.

4. Industrial Service Drop Attachments.

(a) Whenever possible, transformer poles for large services will be adjacent to the building served, unless site conditions require otherwise. In such cases, these transformer poles should be located not more than 20 feet from the attachment point on the building.

(b) Where the service drop cannot be attached directly to the wall, the preferred method for obtaining sufficient clearance is a service riser. When field conditions do not permit the use of a riser, a service pole may be substituted.

5. Existing Service Drop Attachments.

When a change is made to existing service entrance equipment, the attachment shall be relocated, if necessary, to comply with current specifications. These changes will include:

(a) Increase or decrease in service ampacity.

(b) Change from single-phase to three-phase or three-phase to single-phase.

(c) Service entrance conductor or riser replacement.

(d) Meter enclosure replacement.

(e) Relocation of service entrance equipment.

(f) Refastening a service drop that has been pulled off the building.

6. Service Entrance Wiring.

The following paragraphs pertain to service entrance wiring attachments to service drops. Service entrance wiring as it relates to service equipment is covered in Section 5.

(a) Service heads and goosenecks in service entrance cables shall be located not less than 6 inches *above* the point of attachment of the service drop conductors to the building or other structure. [See NEC 230-54(c).]

(b) Bus bar services shall be located not less than 18 inches *below* the service drop attachment point (30 inches preferred).

(c) Service heads shall be out of reach of porches, windows, doors, etc., and shall be situated to provide a clear path for the service drop. (See pages 4-4-5 and 4-4-6.)

(d) Service wires shall extend not less than 24 inches beyond the service head or its equivalent.

(e) All wiring between the Company's service connection point and the customer's main switch shall be subject to inspection and acceptance by the Company.

(f) Where temporary service is desired for building construction or similar operations, the customer’s wiring shall be brought to a location specified by the Company and shall be connected according to specifications furnished by a DTE Electric Planner.

7. Multiple Service Entrance Conductors.

(a) The number of service entrance conductors per phase, for one or more customers, terminating at a single service point, shall be limited as follows:

Customer's Wire Size	Conductors per Phase
500 kcmil	2
350 kcmil	2
250 kcmil	3
4/0 AWG	3
3/0 AWG and smaller	4 (normally)

(b) Installations where the number of load conductors per phase is greater than indicated in (a) above shall terminate in a raintight overhead service terminal cabinet as shown on page 4-7-1. The contractor will furnish the cabinet instead of the service entrance heads that would ordinarily be used.

(c) Bus services provide an ideal service drop termination point and present no connection problem. DTE Electric recommends that bus service heads be used instead of multiple conductor service entrances whenever possible.

8. Identification of Service Entrance Conductors.

In order to assist Lines in the identification of service entrance wires, the following identification will be used as a standard throughout the Company territory. Where a wye-connected system serves a building, Lines will ignore any "P" markings.

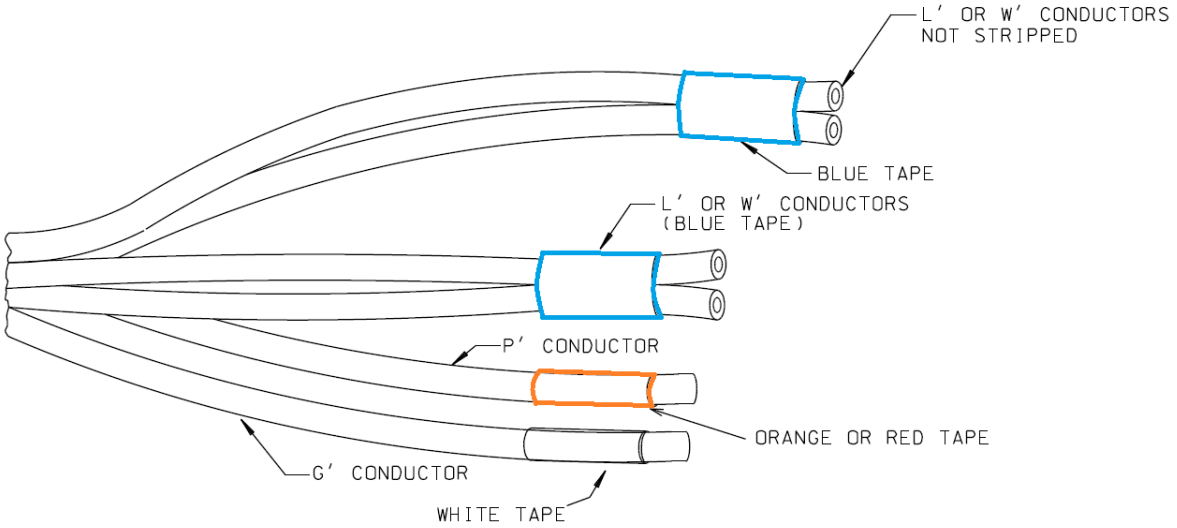

SERVICE DROP CLEARANCES

THE ILLUSTRATIONS BELOW SHOW MINIMUM VERTICAL CLEARANCES FOR SECONDARY SERVICE DROPS. THE HEIGHT OF THE SERVICE WEATHERHEAD OR BUSBAR SERVICE HEAD IS THE RESPONSIBILITY OF THE ELECTRICAL CONTRACTOR.

RESIDENTIAL SERVICE DROPS (SEE NOTE 4)

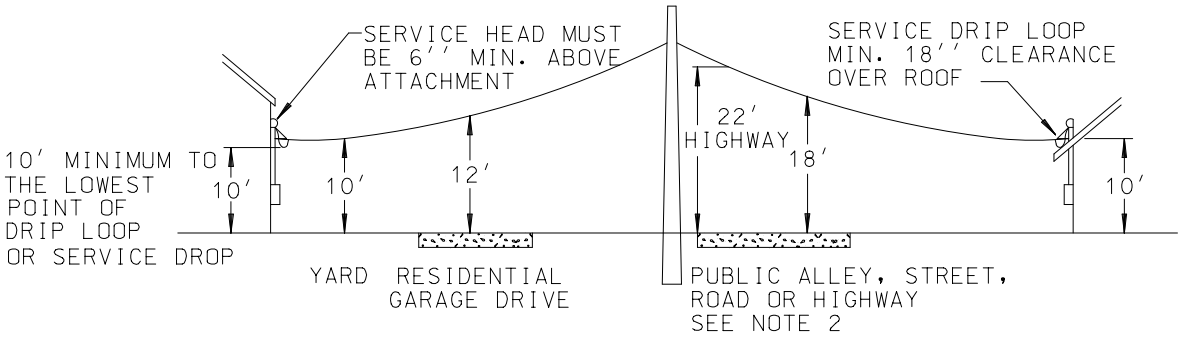

30' MAXIMUM ATTACHMENT HEIGHT

COMMERCIAL SERVICE DROPS

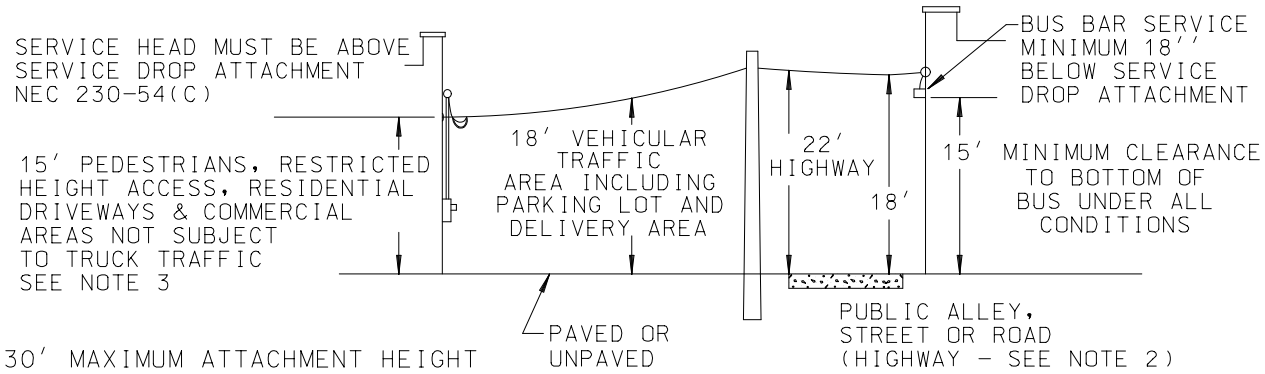

30' MAXIMUM ATTACHMENT HEIGHT

NOTES:

1. ALL DIMENSIONS ARE MINIMUM, MEASURED TO THE LOWEST POINT OF THE SERVICE DROP OR DRIP LOOP, AND MAY BE USED ONLY WHEN APPLICABLE. SPECIFIC CONDITIONS OTHER THAN THOSE SHOWN ABOVE MAY REQUIRE INCREASED CLEARANCES. EXAMPLES: RAILROAD TRACKS, BOAT LAUNCH AREAS, WATER CROSSINGS, ETC.
2. A 22 FOOT CLEARANCE IS REQUIRED FOR ALL HIGHWAY CROSSINGS, WHETHER AT THE CENTER OR EDGE OF THE HIGHWAY. HIGHWAYS ARE DEFINED AS: THOSE STREETS OR ROADS WITH STATE OR FEDERAL MARKINGS, OR MAJOR COUNTY ROADS AND CITY STREETS WHICH ARE DIRECT TRAFFIC ROUTES.
3. FOR THE PURPOSE OF THIS RULE, TRUCKS ARE DEFINED AS THOSE VEHICLES EXCEEDING 8 FEET IN HEIGHT. AREAS NOT SUBJECT TO TRUCK TRAFFIC ARE AREAS WHERE TRUCK TRAFFIC IS NOT NORMALLY ENCOUNTERED OR NOT REASONABLY ANTICIPATED.
4. ALL NEW, RELOCATED OR UPGRADED RESIDENTIAL SERVICE DROPS WILL BE INSTALLED AS UNDERGROUND RESIDENTIAL SERVICE-LATERALS AT THE CUSTOMERS EXPENSE.
5. CONDUCTOR SAG MUST BE TAKEN INTO CONSIDERATION DESIGN & CONSTRUCTION

THE DTE ELECTRIC COMPANY ASSUMES NO RESPONSIBILITY FOR INJURY OR DAMAGE ARISING FROM THE USE OF THIS SPECIFICATION DIAGRAM.

1-11-14

VERTICAL CLEARANCES OF WIRES OVER POOLS AND DIVING BOARDS

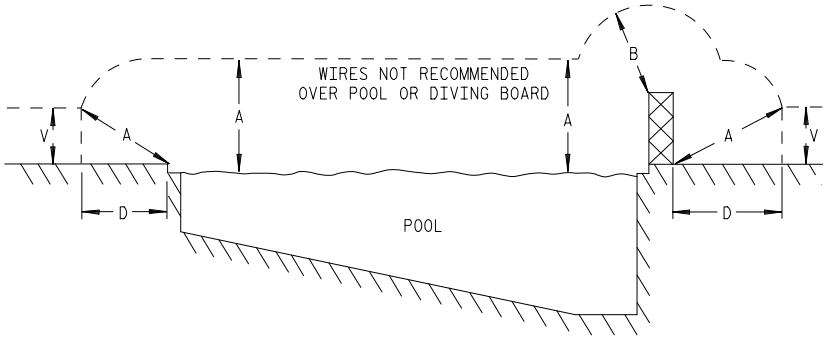

VERTICAL CLEARANCES FROM:	WATER LEVEL; EDGE OF POOL; BASE OF DIVING PLATFORM; OR ANCHORED RAFT "A"	DIVING PLATFORM, TOWER, WATER SLIDE, OR OTHER FIXED POOL RELATED STRUCTURE "B"	VERTICAL CLEARANCE FOR AREAS ACCESSIBLE ONLY TO PEDESTRIANS "V" (NOTE 6)
NEUTRALS, GROUNDED GUYS, MESSENGERS, COMMUNICATION (SEE NOTE 2*)	24	16	11
0 - 750 V MULTIPLEX CABLES (SEE NOTE 2*)	24	16	13.5
0 - 750 V OPEN SECONDARY LINE CONDUCTORS	26	18	15.5
4.8 KV TO 13.2 KV PRIMARY LINE CONDUCTORS	30	22	20
24 / 40 KV	31	23	20
69 KV	31	23	21
120 KV	32	24	22
138 KV	33	25	23

TABLE 04-04-05.1
CLEARANCES ARE IN FT

NOTES:

1. CONDUCTORS SHOULD NOT PASS OVER A SWIMMING POOL OR THE SURROUNDING AREA. IF THEY MUST PASS OVER OR BY THE POOL, THE CLEARANCES IN THE TABLE AND THE FIGURE MUST BE MET.AT NO TIME SHALL THE CLEARANCE BETWEEN WATER AND A CONDUCTOR BE LESS THAN "A" IN ANY DIRECTION.
2. CONDUCTORS, SPECIFIED ABOVE, HORIZONTALLY GREATER THAN 10 FEET FROM THE EDGE OF THE POOL OR DIVING PLATFORM NEED ONLY A VERTICAL CLEARANCE OF "V". IF CONDUCTORS ARE WITHIN 10 FEET HORIZONTALLY, CLEARANCES "A" OR "B" IN TABLE ABOVE MUST BE MET.
3. CLEARANCES SHALL BE CALCULATED AT MAXIMUM FINAL SAG AT THE MAXIMUM OPERATING TEMPERATURE OF THE CONDUCTOR. REFER TO SECTION 18 FOR SAGS.
4. THESE CLEARANCES ALSO APPLY TO CROSSINGS OF BEACHES AND WATERWAYS RESTRICTED TO SWIMMING WHERE RESCUE POLES ARE USED BY LIFEGUARDS.
5. WHIRLPOOLS, HOT TUBS, JACUZZIS, OR OTHER SIMILAR INSTALLATIONS NOT SUITABLE FOR SWIMMING ARE NOT CONSIDERED AS SWIMMING POOLS COVERED BY THE CLEARANCES IN THE ABOVE TABLE. THE ABOVE CLEARANCES ALLOW FOR USE OF A SKIMMER OR RESCUE POLE.
6. "V" VALUES IN THIS COLUMN INCLUDE THE VERTICAL CLEARANCE ADDER PER 1-11-1. REFER TO 1-11-7 AND 1-11-8 FOR ADJACENT AREAS THAT ARE NOT LIMITED TO PEDESTRIANS ONLY. ACTUAL FIELD OR DESIGN HEIGHTS SHOULD BE USED FOR "V" TO ADDRESS ANALYSIS AND DESIGN SITUATIONS.
7. "D" IN THE FIGURE ABOVE IS THE HORIZONTAL DISTANCE BETWEEN THE OH CONDUCTOR AND THE EDGE OF WATER. TO ENSURE THAT "A" IS MET, USE FORMULA $A = \sqrt{V^2 + D^2}$. THE CALCULATED VALUE OF "A" SHALL BE GREATER THAN OR EQUAL TO THE "A" VALUE IN TABLE 4-4-5.1. IF "V" IS GREATER THAN OR EQUAL TO "A", "D" DOES NOT HAVE TO BE CALCULATED.
8. CONTACT SERVICE PLANNER TO DISCUSS POSSIBLE OPTIONS IF WIRE(S) ARE INSIDE CLEARANCES.

THE DTE ELECTRIC COMPANY ASSUMES NO RESPONSIBILITY FOR INJURY OR DAMAGE ARISING FROM THE USE OF THIS SPECIFICATION DIAGRAM.

RESIDENTIAL SERVICES TERMINATION POINTS & CLEARANCES

(SEE NOTE 8)

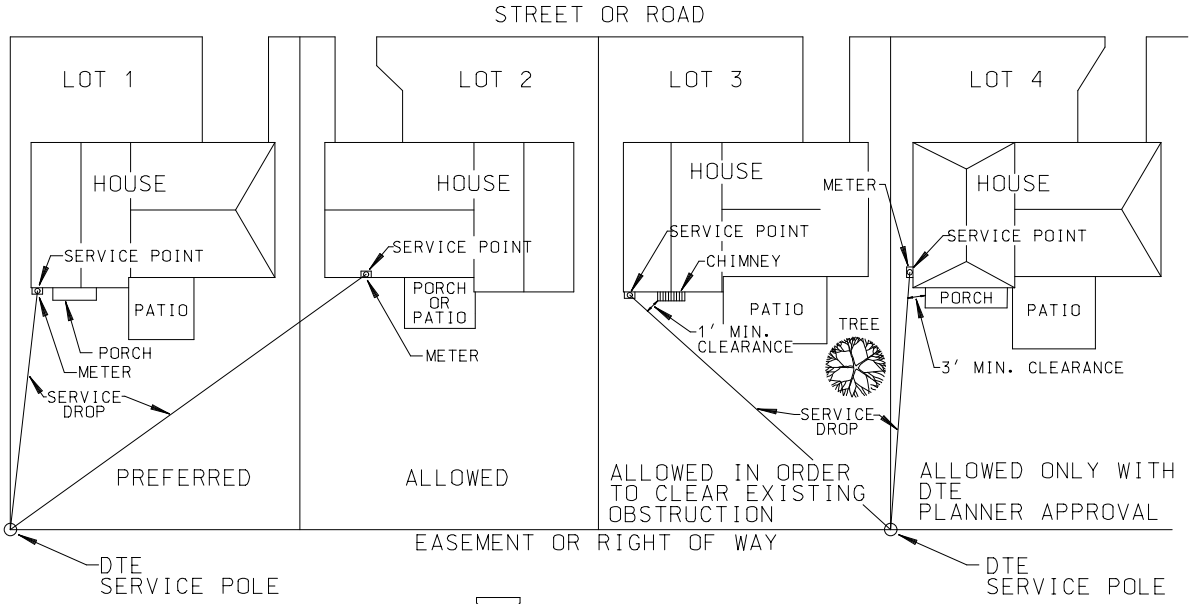

NOTES:

1. SERVICE DROPS ARE NOT ALLOWED OVER WINDOW WALLS OR DOORS AND MUST MAINTAIN A 10' MINIMUM CLEARANCE OVER PATIOS, PORCHES AND FINAL GRADE.
2. ATTACHMENT POINTS MUST PROVIDE THE PROPER SERVICE DROP CLEARANCES OVER DRIVEWAYS, PORCHES, ETC. GARAGE ROOFS WITH A SLOPE OF 4" IN 12" REQUIRE 3' CLEARANCE. ROOFS WITH LESS SLOPE REQUIRE 8' CLEARANCE.
3. SHADED AREAS ARE MINIMUM CLEARANCES PERMITTED AROUND WINDOWS. NO DTE ELECTRIC SERVICE DROPS WILL BE ALLOWED WITHIN THESE AREAS.
4. SERVICE DROPS CROSSING WINDOWS OR NEAR PORCHES MUST BE OUT OF REACH. A CLEARANCE OF 3' MINIMUM TO THE SIDE AND BELOW AND 6" ABOVE IS REQUIRED.
5. FOR LOW RESIDENCES, AN APPROVED RISER MAY BE REQUIRED. CONSULT DTE ELECTRIC PLANNER.
6. METER CLEARANCES AND HEIGHT MUST BE MAINTAINED ABOVE DECKS. SEE 5-3-1 AND 5-3-2 FOR METER INSTALLATION, HEIGHT AND CLEARANCE REQUIREMENTS.
7. ANY BOND BETWEEN THE METER ENCLOSURE AND JOINT USERS THAT INTERFERES WITH REMOVING THE COVER ON THE METER BOX IS A VIOLATION OF NEC 250.94 (3). THE JOINT USER WHO CREATED THE VIOLATION MUST CORRECT THE SITUATION.
8. ALL NEW, RELOCATED OR UPGRADED RESIDENTIAL SERVICE DROPS SHALL BE INSTALLED AS UNDERGROUND RESIDENTIAL SERVICE-LATERALS AT THE CUSTOMERS EXPENSE.

DTE ELECTRIC COMPANY ASSUMES NO RESPONSIBILITY FOR INJURY OR DAMAGE ARISING FROM THE USE OF THIS SPECIFICATION DIAGRAM.

(FOR REFERENCE ONLY) NAILED SERVICE BOLT FRAME CONSTRUCTION MAXIMUM LOAD 1230 LBS. (SEE NOTE 6)

SERVICE BOLT FURNISHED AND INSTALLED BY CONTRACTOR BEFORE FINISHED WALLS ARE STARTED USING NAILS PROVIDED OR EQUIVALENT SCREWS.

THREADED PORTION OF SERVICE BOLTS MUST EXTEND A MINIMUM OF 2" FROM FACE OF BUILDING

BEND NAILS OVER

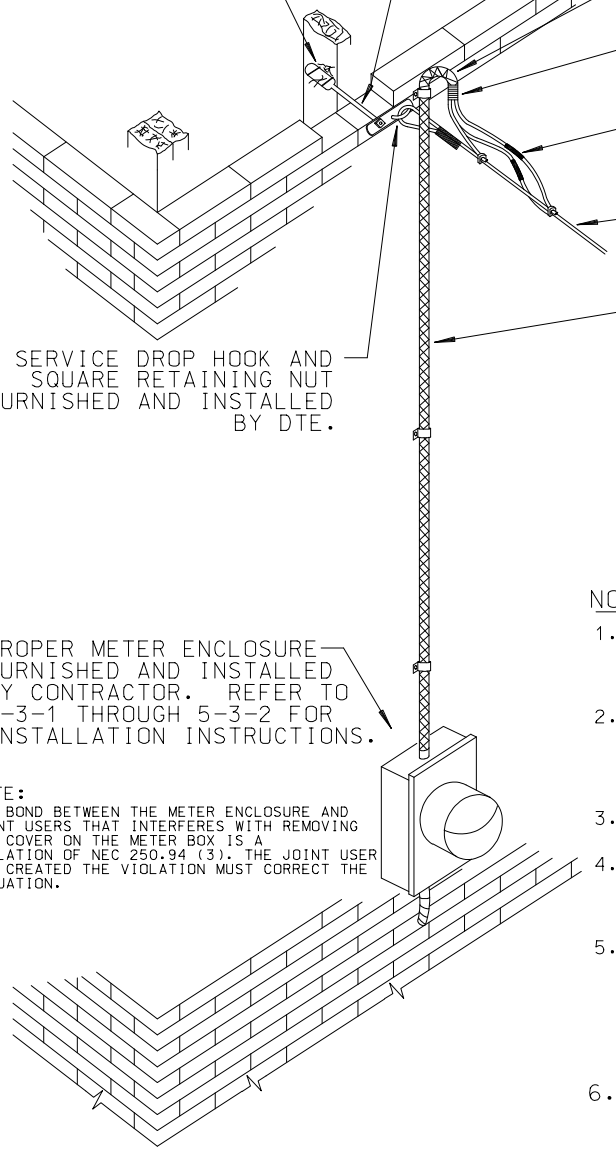

BRICK VENEER SHOWN. MAY ALSO BE WOOD, ALUMINUM OR VINYL SIDING.

GOOSENECK, FORMED BY CONTRACTOR. CONTRACTOR TO LEAVE 24" OF WIRE BEYOND GOOSENECK FOR TAPPING.

SEAL END OF CABLE USING TAPE AND PAINT OR SELF-SEALING WEATHER RESISTANT THERMOPLASTIC TAPE.

ACCEPTABLE TAP CONNECTORS FURNISHED AND INSTALLED BY DTE WITH NEW SERVICE DROP OR BY CONTRACTOR WITH SERVICE ENTRANCE REPLACEMENT.

SERVICE DROP, FURNISHED AND INSTALLED BY DTE O.H. LINES DEPARTMENT.

SERVICE ENTRANCE CABLE, RIGID METAL CONDUIT, IMC, RIGID NONMETALLIC CONDUIT SUITABLE FOR LOCATION OR ELECTRICAL METALLIC TUBING FURNISHED AND INSTALLED BY THE CONTRACTOR.

SERVICE DROP HOOK AND SQUARE RETAINING NUT FURNISHED AND INSTALLED BY DTE.

NOTE:
IF FULL LENGTH CONDUIT IS USED, THE CONTRACTOR MUST INSTALL A WEATHERHEAD THAT EXTENDS A MINIMUM OF 6" ABOVE THE SERVICE DROP ATTACHMENT POINT.

REFERENCE: OVERHEAD LINES CONSTRUCTION STANDARDS DETAIL 910

PROPER METER ENCLOSURE FURNISHED AND INSTALLED BY CONTRACTOR. REFER TO 5-3-1 THROUGH 5-3-2 FOR INSTALLATION INSTRUCTIONS.

NOTE:
ANY BOND BETWEEN THE METER ENCLOSURE AND JOINT USERS THAT INTERFERES WITH REMOVING THE COVER ON THE METER BOX IS A VIOLATION OF NEC 250.94 (3). THE JOINT USER WHO CREATED THE VIOLATION MUST CORRECT THE SITUATION.

NOTES:

1. WHENEVER POSSIBLE, SERVICE BOLTS SHALL BE INSTALLED ON THE FIRST STUD FROM THE CORNER OF THE BUILDING NEAREST TO THE DTE POLE FROM WHICH THE SERVICE DROP SHALL BE RUN.
2. RESIDENTIAL SERVICE DROPS MAY TERMINATE AT A MINIMUM OF TEN FEET TO GRADE (12' PREFERRED), PROVIDED THAT PROPER VERTICAL CLEARANCES OVER DRIVEWAYS, PORCHES, GARAGES OR OTHER OBSTRUCTIONS ARE MAINTAINED. REFER TO 4-4-5&6.
3. SERVICE DROP ATTACHMENT POINTS SHALL NOT BE MORE THAN 30 FEET ABOVE FINISHED GRADE.
4. CONTRACTOR SHALL REQUEST A DTE ELECTRIC PLANNER TO SPECIFY LOCATION OF ALL SERVICE BOLTS THAT CANNOT BE INSTALLED IN REASONABLE ACCORDANCE WITH THIS DRAWING.
5. SERVICE BOLTS ARE LIMITED TO THE DIRECT ATTACHMENT OF No. 1/0 QUADREX OR SMALLER SERVICE DROPS. WHERE IT IS NECESSARY TO ATTACH SERVICE DROPS LARGER THAN No. 1/0 QUADREX, THE TENSION (SAG) OF THE DROP MUST BE ADJUSTED TO EQUAL No. 1/0 QUADREX OR A MORE SUBSTANTIAL ATTACHMENT SHALL BE PROVIDED.
6. ALL NEW, RELOCATED OR UPGRADED RESIDENTIAL SERVICE DROPS SHALL BE INSTALLED AS UNDERGROUND RESIDENTIAL SERVICE-LATERALS AT THE CUSTOMERS EXPENSE.

DTE ELECTRIC COMPANY ASSUMES NO RESPONSIBILITY FOR INJURY OR DAMAGE ARISING FROM THE USE OF THIS SPECIFICATION DIAGRAM.

SERVICE THROUGH BOLT

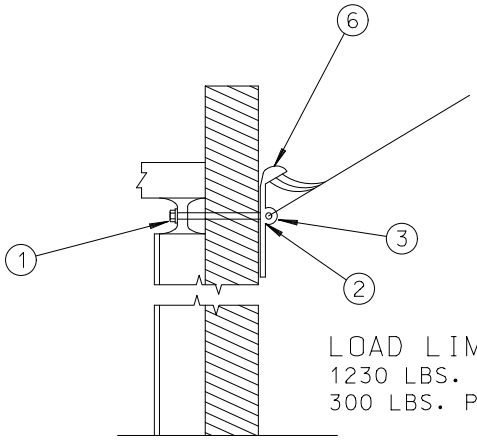

LOAD LIMITS:
1230 LBS. IN LINE WITH BOLT
300 LBS. PARALLEL TO WALL

STEEL FRAME WITH BLOCK WALL

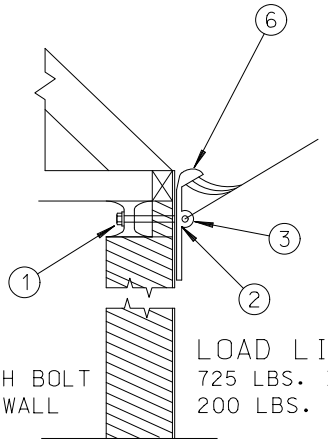

LOAD LIMITS:
725 LBS. IN LINE WITH BOLT
200 LBS. PARALLEL TO WALL

GIRDER ON BLOCK WALL

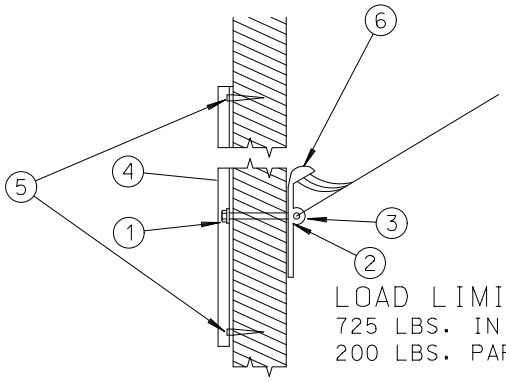

LOAD LIMITS:
725 LBS. IN LINE WITH BOLT
200 LBS. PARALLEL TO WALL

WITH BACKUP MEMBER

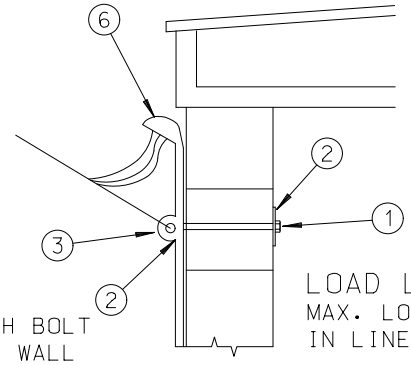

LOAD LIMITS:
MAX. LOAD 440 LBS.
IN LINE WITH BOLT

THROUGH BOLT IN CEMENT BLOCK,
CINDER BLOCK OR SOLID MASONRY

LEGEND:

1. 5/8″ GALVANIZED THROUGH BOLT FURNISHED AND INSTALLED BY CONTRACTOR.
2. SQUARE PLATE WASHER FURNISHED BY DTE AND INSTALLED BY CONTRACTOR.
3. EYENUT FURNISHED AND INSTALLED BY DTE ELECTRIC COMPANY.
4. STANDARD CHANNEL BACK-UP MEMBER FURNISHED AND INSTALLED BY CONTRACTOR.
5. 3/8″ TOGGLE OR ANCHOR BOLT FURNISHED AND INSTALLED BY CONTRACTOR.
6. SERVICE ENTRANCE CAP FURNISHED AND INSTALLED BY CONTRACTOR.

NOTES:

A. CONTRACTOR SHALL REQUEST SERVICE PLANNING TO SPECIFY LOCATION OF ALL SERVICE THROUGH BOLTS THAT CANNOT BE INSTALLED IN REASONABLE ACCORDANCE WITH THIS DRAWING.
B. SERVICE THROUGH BOLTS SHALL BE LOCATED AS NEAR AS POSSIBLE TO DTE POLE FROM WHICH THE SERVICE DROP WILL BE RUN AND SITUATED TO PROVIDE A CLEAR PATH BETWEEN THE SERVICE BOLT AND THE POLE.
C. SEE PAGES 4-4-5 & 4-4-6 FOR CLEARANCES.
D. SERVICE THROUGH BOLT SHOULD NOT BE LOCATED IN A PARAPET WALL OR LOCATED NEAR A BUILDING CORNER, DOOR OR WINDOW OPENINGS.
E. CONTRACTOR SHALL IDENTIFY SERVICE ENTRANCE CONDUCTORS PER INSTRUCTIONS CONTAINED ON PAGES 5-1-2 AND 5-1-3 SIM-ESIG UNDER GENERAL RULES AND REGULATIONS.
F. SERVICE HEAD SHALL EXTEND A MINIMUM OF 6″ ABOVE THROUGH BOLT.

DTE ELECTRIC COMPANY ASSUMES NO RESPONSIBILITY FOR INJURY
OR DAMAGE ARISING FROM THE USE OF THIS SPECIFICATION DIAGRAM.

1-9-25

MAINTENANCE OF ATTACHMENTS WITH SERVICE INSULATORS

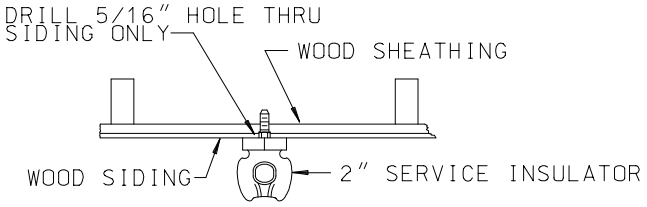

REPLACE EXISTING 2" SERVICE INSULATOR WITH 4" SERVICE INSULATOR IN STUD - DRILL 1/4" LEADER HOLE

WOOD SIDING

DETAIL 925

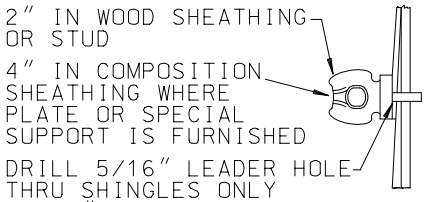

RELOCATE INTO STUD WITH PROPER LENGTH SERVICE INSULATOR

COMPOSITION OR ASBESTOS SHINGLE SIDING

DETAIL 925A

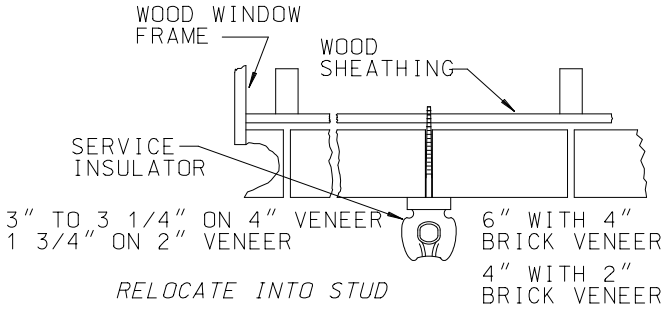

RELOCATE INTO STUD

BRICK VENEER
WOOD SHEATHING
DETAIL 925B

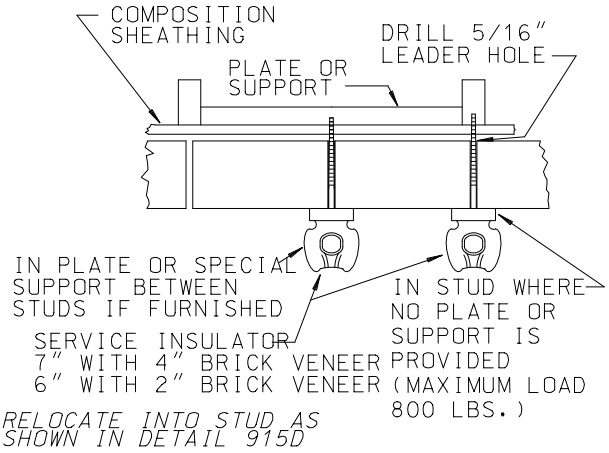

RELOCATE INTO STUD AS SHOWN IN DETAIL 915D

BRICK VENEER

DETAIL 925B

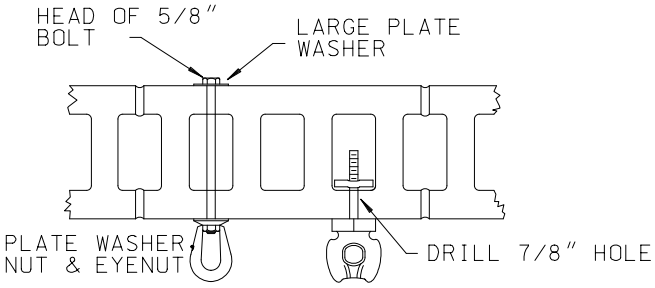

TOGGLE BOLT

THROUGH BOLT SERVICE INSULATOR

DETAIL 925D DETAIL 925E

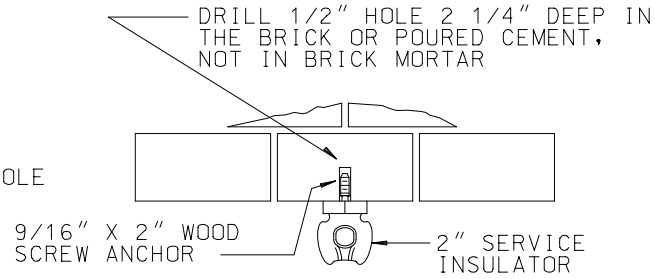

REMAKE ATTACHMENT OR REPLACE WITH DETAIL 920B

CEMENT BLOCK
MAXIMUM LOAD 440 LBS.
REPLACE WITH DETAIL 920B

SOLID BRICK OR CEMENT MASONRY

DETAIL 925F

DTE ELECTRIC COMPANY ASSUMES NO RESPONSIBILITY FOR INJURY OR DAMAGE ARISING FROM THE USE OF THIS SPECIFICATION DIAGRAM.

1-9-26

OBSOLETE ATTACHMENTS WITH RACKS OR SPOOLS

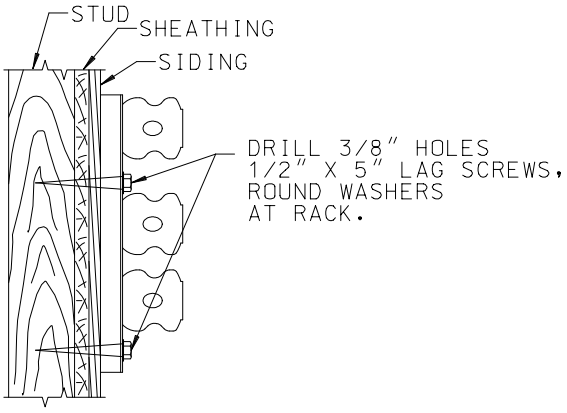

MAXIMUM LOAD 1320 LBS.

FRAME
DETAIL 926

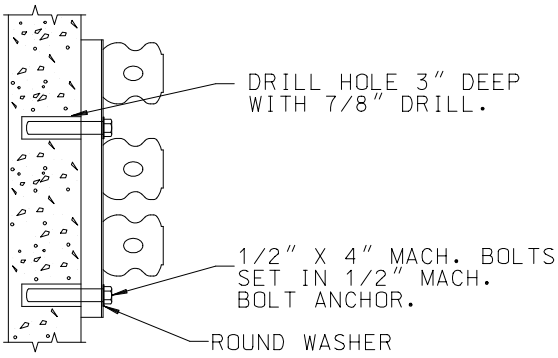

MAXIMUM LOAD 1320 LBS.

SOLID MASONRY
DETAIL 926B

NOTE:

1. FOR 8" RACKS, USE 3 BOLTS TO ATTACH RACK.
2. MAINTAIN WITH ATTACHMENTS FOR MULTIPLEX SERVICE.

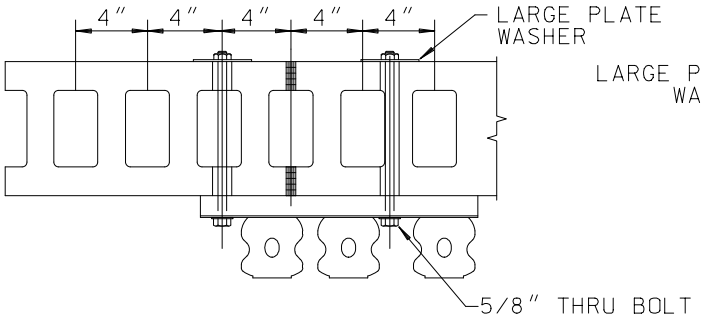

MAXIMUM LOAD 1000 LBS.
CONCRETE OR CINDER BLOCK
(PLAN VIEW)
DETAIL 926D

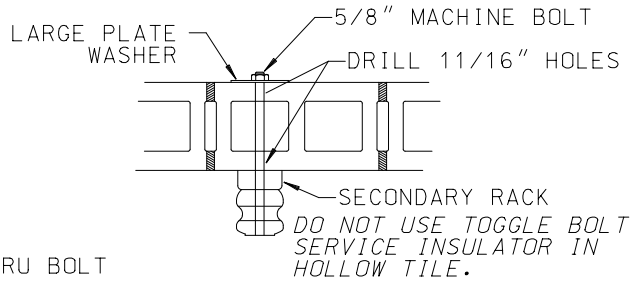

MAXIMUM LOAD 1000 LBS.
HOLLOW TILE
(PLAN VIEW)
DETAIL 926E

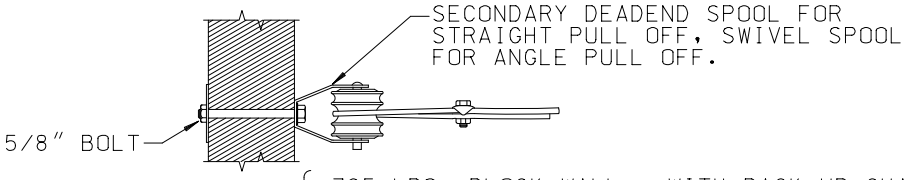

MAXIMUM LOAD { 725 LBS. BLOCK WALL - WITH BACK-UP CHANNEL (SEE DETAIL 920B).
1230 LBS. BLOCK WALL - WITH BOLT IN STEEL FRAMEWORK OF BUILDING. (SEE DETAIL 920).

SPOOL ATTACHMENT
DETAIL 926F

DTE ELECTRIC COMPANY ASSUMES NO RESPONSIBILITY FOR INJURY OR DAMAGE ARISING FROM THE USE OF THIS SPECIFICATION DIAGRAM.

SERVICE RISERS

1. Scope.

(a) This specification covers the requirements for providing an adequate service attachment height using a service riser or support on low buildings.

(b) The material and workmanship of all service riser assemblies must comply with specifications acceptable to DTE Electric.

2. Material.

(a) Risers shall be zinc-coated steel (hot dip galvanized). Only one-piece risers are acceptable. Rigid metal or intermediate metal conduit riser assemblies 10 feet or less in length will be fabricated using one continuous piece of conduit.

(b) Standard weight pipe, rigid conduit, angle, channel, or other members capable of supporting the intended maximum drop tensions may be used for the riser.

(c) Flanges, brackets, or other means of fastening the riser to the building shall be designed to adequately support the load imposed on the riser.

(d) Provisions shall be made at the top of the riser for an uninsulated point of attachment for the service drop.

3. Fastening Methods.

(a) The service riser must be securely fastened to the building so as to withstand the tension of the service drop.

(b) Galvanized square head 1/2 inch or 5/8 inch bolts, nuts, and washers, as required, are furnished by the contractor for fastening service risers to cement block, concrete, or solid masonry walls.

(FOR REFERENCE ONLY)

ROOF SUPPORTED SERVICE RISERS WITH ROOF OVERHANG FOR 1 1/4'', 1 1/2'', 2'' AND 2 1/2'' RIGID CONDUIT

(SEE NOTE 8)

STEEL CONDUIT SIZE	MAX UNSUPPORTED LENGTH ''A''	MINIMUM LENGTH ''B''	MAXIMUM LOADING
1 1/4''	21''	----	440 LBS.
1 1/2''	21''	----	660 LBS.
2''	30''	30''	750 LBS.
2 1/2''	42''	30''	750 LBS.

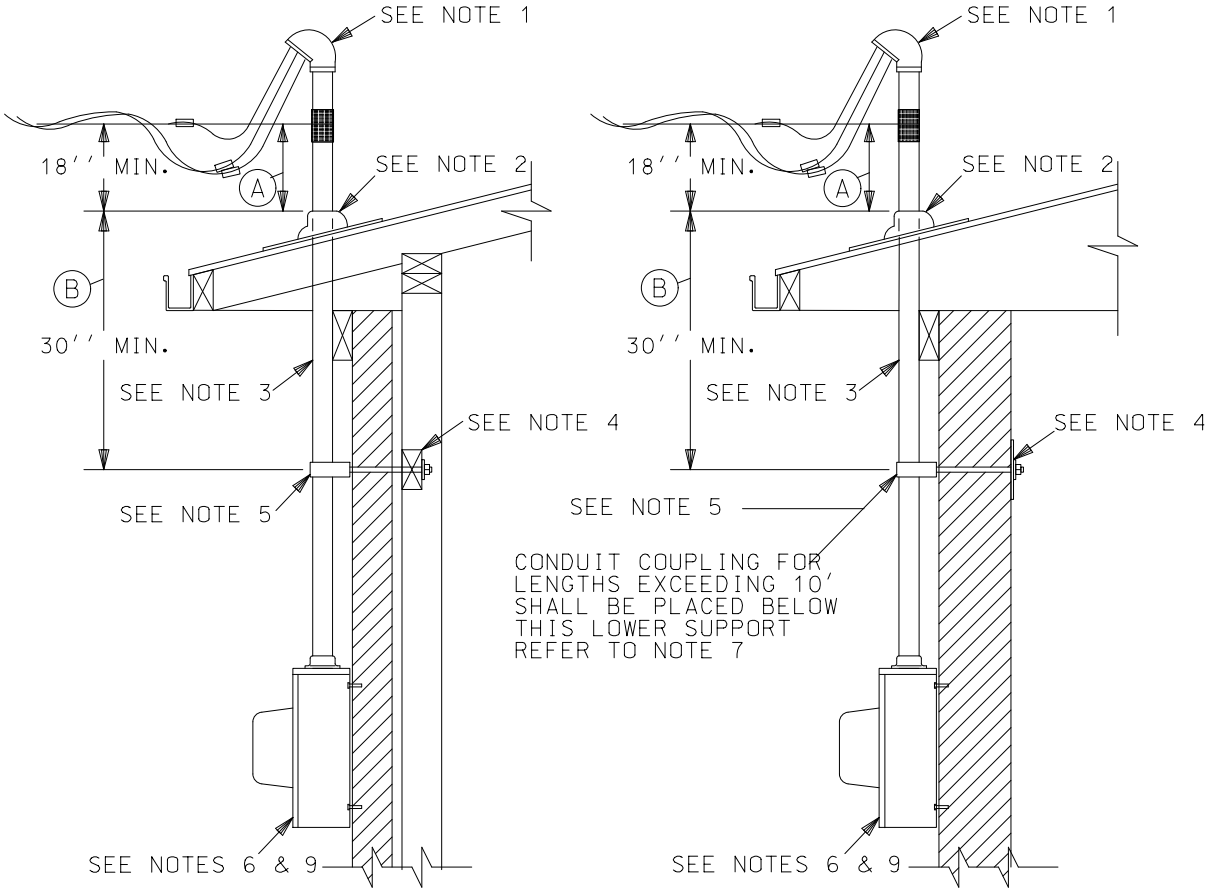

NOTES:

1. SERVICE ENTRANCE CAP FURNISHED AND INSTALLED BY CONTRACTOR.
   (a)CONTRACTOR TO ALLOW 24'' OF WIRE BEYOND SERVICE CAP FOR ATTACHING TO DROP.
   (b)CONTRACTOR SHALL IDENTIFY SERVICE ENTRANCE CONDUCTORS PER INSTRUCTIONS CONTAINED ON PAGE 4-4-4.
2. METAL ROOF SUPPORT PLATE UL LISTED FOR USE AS A CONDUIT SUPPORT FURNISHED AND INSTALLED BY CONTRACTOR.
   (a)PLATE MAY BE INSTALLED ON TOP OF SHINGLES PROVIDED UPPER SHINGLES ARE LIFTED TO LAP OVER PLATE. HOWEVER, FOR MAXIMUM STRENGTH ATTACH ROOF SUPPORT PLATE TO ROOF BEFORE SHINGLING. SHINGLES SHALL BE OVER THE PLATE AND SEALED WITH ROOFING COMPOUND.
   (b)USE FULL THREAD PAN HEAD SCREWS AS FURNISHED FOR ATTACHING PLATE TO ROOF.
3. RIGID OR IMC STEEL CONDUIT FURNISHED AND INSTALLED BY CONTRACTOR.
4. 2'' X 4'' BACKING (NAILED SECURELY BETWEEN STUDS) FURNISHED AND INSTALLED BY CONTRACTOR. USE 1/8'' STEEL PLATE FOR CONCRETE BLOCK CONSTRUCTION.
5. SOLID RING CONDUIT SUPPORT AND BOLT ASSEMBLY FURNISHED AND INSTALLED BY CONTRACTOR. (REQUIRED WITH 2'' AND 2 1/2'' CONDUIT)
6. METER ENCLOSURE FURNISHED AND INSTALLED BY CONTRACTOR. (USED AS LOWER SUPPORT WITH 1 1/4'' AND 1 1/2'' CONDUIT)
7. IF LENGTH IS 10' OR LESS USE ONE PIECE GALVANIZED RIGID OR IMC STEEL CONDUIT. REFER TO DRAWING NOTE FOR CONDUIT EXCEEDING 10'.
8. ALL NEW, RELOCATED, OR UPGRADED RESIDENTIAL SERVICE CONNECTIONS SHALL BE INSTALLED AS UNDERGROUND RESIDENTIAL SERVICE-LATERALS AT THE CUSTOMERS EXPENSE
9. ANY BOND BETWEEN THE METER ENCLOSURE AND JOINT USERS THAT INTERFERES WITH REMOVING THE COVER ON THE METER BOX IS A VIOLATION OF NEC 250.94 (3). THE JOINT USER WHO CREATED THE VIOLATION MUST CORRECT THE SITUATION.

DTE ELECTRIC COMPANY ASSUMES NO RESPONSIBILITY FOR INJURY OR DAMAGE ARISING FROM THE USE OF THIS SPECIFICATION DIAGRAM.

(FOR REFERENCE ONLY)

RIGID STEEL CONDUIT OFFSET RISER ASSEMBLY
1 1/4'' AND 2'' CONDUIT SIZE
MAXIMUM LOAD - 640 LBS.

(SEE NOTE 5)

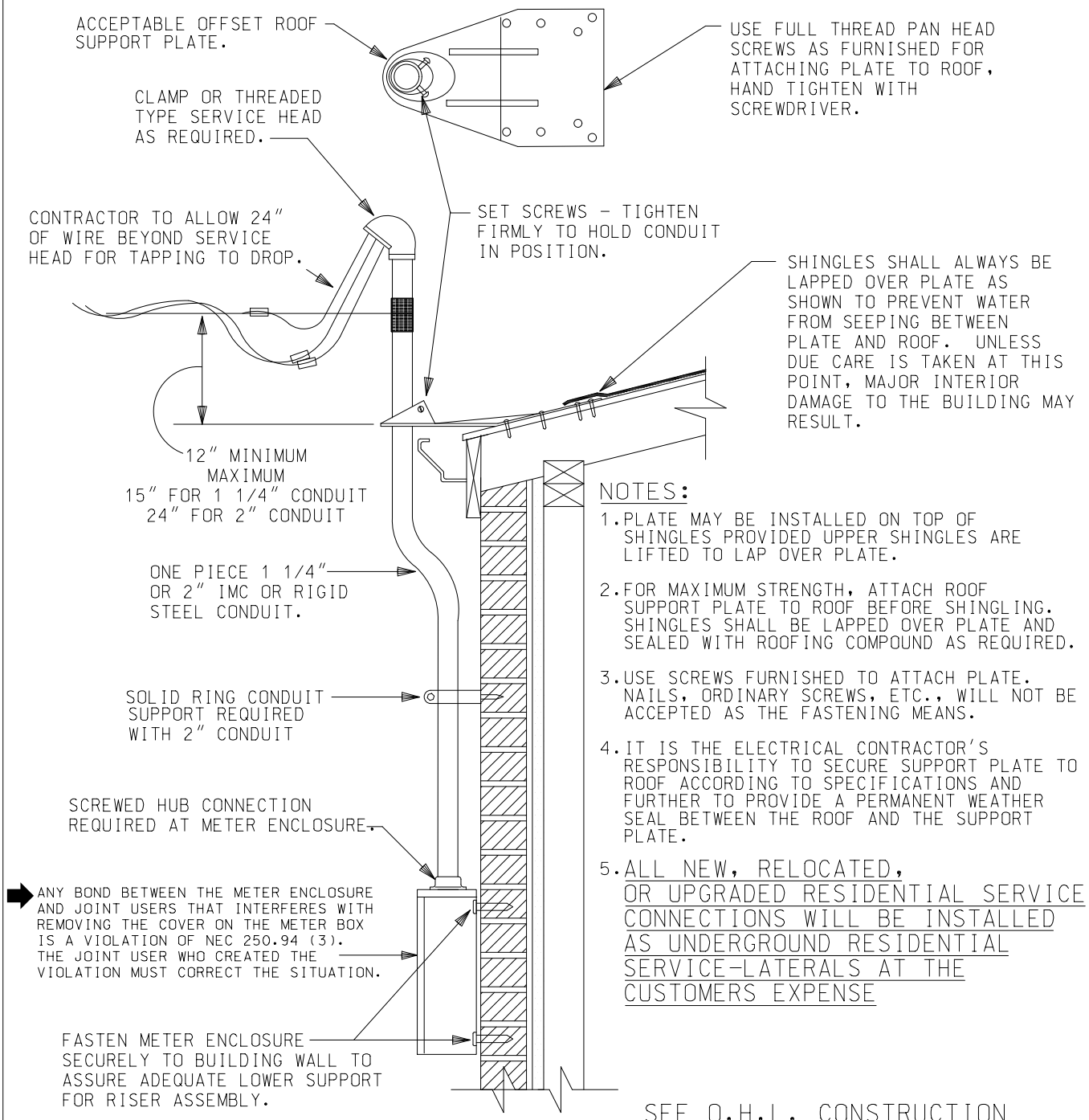

NOTES:

1. PLATE MAY BE INSTALLED ON TOP OF SHINGLES PROVIDED UPPER SHINGLES ARE LIFTED TO LAP OVER PLATE.
2. FOR MAXIMUM STRENGTH, ATTACH ROOF SUPPORT PLATE TO ROOF BEFORE SHINGLING. SHINGLES SHALL BE LAPPED OVER PLATE AND SEALED WITH ROOFING COMPOUND AS REQUIRED.
3. USE SCREWS FURNISHED TO ATTACH PLATE. NAILS, ORDINARY SCREWS, ETC., WILL NOT BE ACCEPTED AS THE FASTENING MEANS.
4. IT IS THE ELECTRICAL CONTRACTOR'S RESPONSIBILITY TO SECURE SUPPORT PLATE TO ROOF ACCORDING TO SPECIFICATIONS AND FURTHER TO PROVIDE A PERMANENT WEATHER SEAL BETWEEN THE ROOF AND THE SUPPORT PLATE.
5. ALL NEW, RELOCATED, OR UPGRADED RESIDENTIAL SERVICE CONNECTIONS WILL BE INSTALLED AS UNDERGROUND RESIDENTIAL SERVICE-LATERALS AT THE CUSTOMERS EXPENSE

SEE O.H.L. CONSTRUCTION STANDARDS DETAIL 914

DTE ELECTRIC COMPANY ASSUMES NO RESPONSIBILITY FOR INJURY OR DAMAGE ARISING FROM THE USE OF THIS SPECIFICATION DIAGRAM.

RIGID STEEL CONDUIT RISER ASSEMBLY
2'' AND 2 1/2'' CONDUIT SIZE
SOLID WALL CONSTRUCTION

STEEL CONDUIT SIZE	MAX UNSUPPORTED LENGTH ''A''	MINIMUM LENGTH ''B''	MAXIMUM LOADING
2''	30''	30''	725 LBS.
2 1/2''	42''	30''	725 LBS.

(SEE NOTE 8)

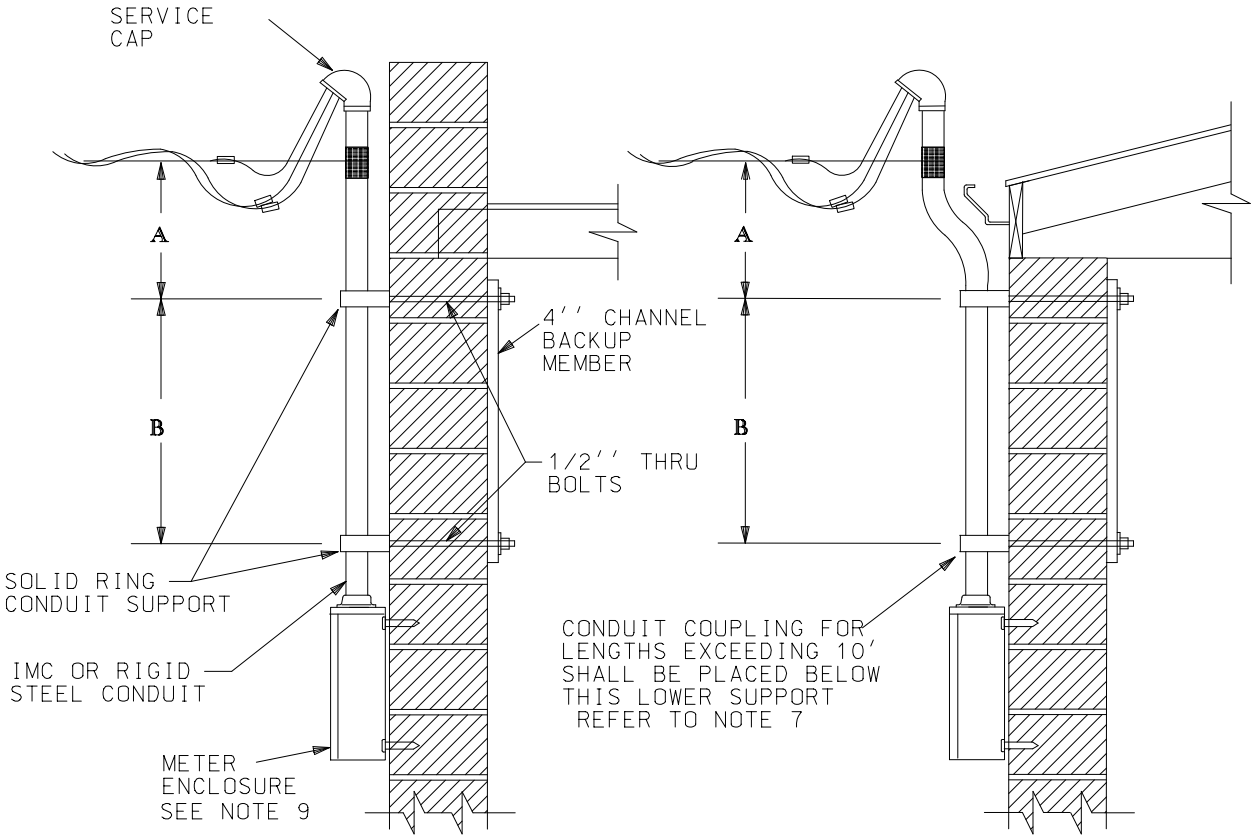

STRAIGHT CONDUIT RISER OFFSET CONDUIT RISER

NOTES:

1. CONDUIT, CONDUIT SUPPORTS, SERVICE CAP, 1/2'' THRU BOLTS AND CHANNEL BACKUP MEMBER SUPPLIED BY CONTRACTOR.
2. THE DTE ELECTRIC PLANNER SHALL DETERMINE THE NEED, LOCATION AND TYPE OF SERVICE RISER INSTALLATION.
3. SERVICE RISER SHALL BE LOCATED ON THE OUTSIDE WALL OF THE BUILDING NEAREST THE POLE FROM WHICH THE SERVICE DROP WILL BE RUN AND SITUATED TO PROVIDE A CLEAR PATH BETWEEN THE RISER AND THE POLE.
4. SEE PAGE 4-4-5 FOR CLEARANCES.
5. SERVICE RISER SHOULD NOT BE ATTACHED TO A PARAPET WALL OR LOCATED NEAR BUILDING CORNER, DOOR OR WINDOW OPENING.
6. CONTRACTOR SHALL IDENTIFY SERVICE ENTRANCE CONDUCTORS PER INSTRUCTIONS CONTAINED ON PAGE 4-4-4.
7. IF LENGTH IS 10' OR LESS USE ONE PIECE GALVANIZED RIGID OR IMC STEEL CONDUIT. REFER TO DRAWING NOTE FOR CONDUIT EXCEEDING 10'.
8. ALL NEW, RELOCATED, OR UPGRADED RESIDENTIAL SERVICE CONNECTIONS WILL BE INSTALLED AS UNDERGROUND RESIDENTIAL SERVICE-LATERALS AT THE CUSTOMERS EXPENSE.
9. ANY BOND BETWEEN THE METER ENCLOSURE AND JOINT USERS THAT INTERFERES WITH REMOVING THE COVER ON THE METER BOX IS A VIOLATION OF NEC 250.94 (3). THE JOINT USER WHO CREATED THE VIOLATION MUST CORRECT THE SITUATION.

DTE ELECTRIC COMPANY ASSUMES NO RESPONSIBILITY FOR INJURY OR DAMAGE ARISING FROM THE USE OF THIS SPECIFICATION DIAGRAM.

RIGID STEEL CONDUIT RISER ASSEMBLY
3'', 3 1/2'' & 4'' CONDUIT SIZE
SOLID WALL CONSTRUCTION
MAXIMUM LOAD 750 LBS.
REFERENCE: O.H. DETAIL 912A

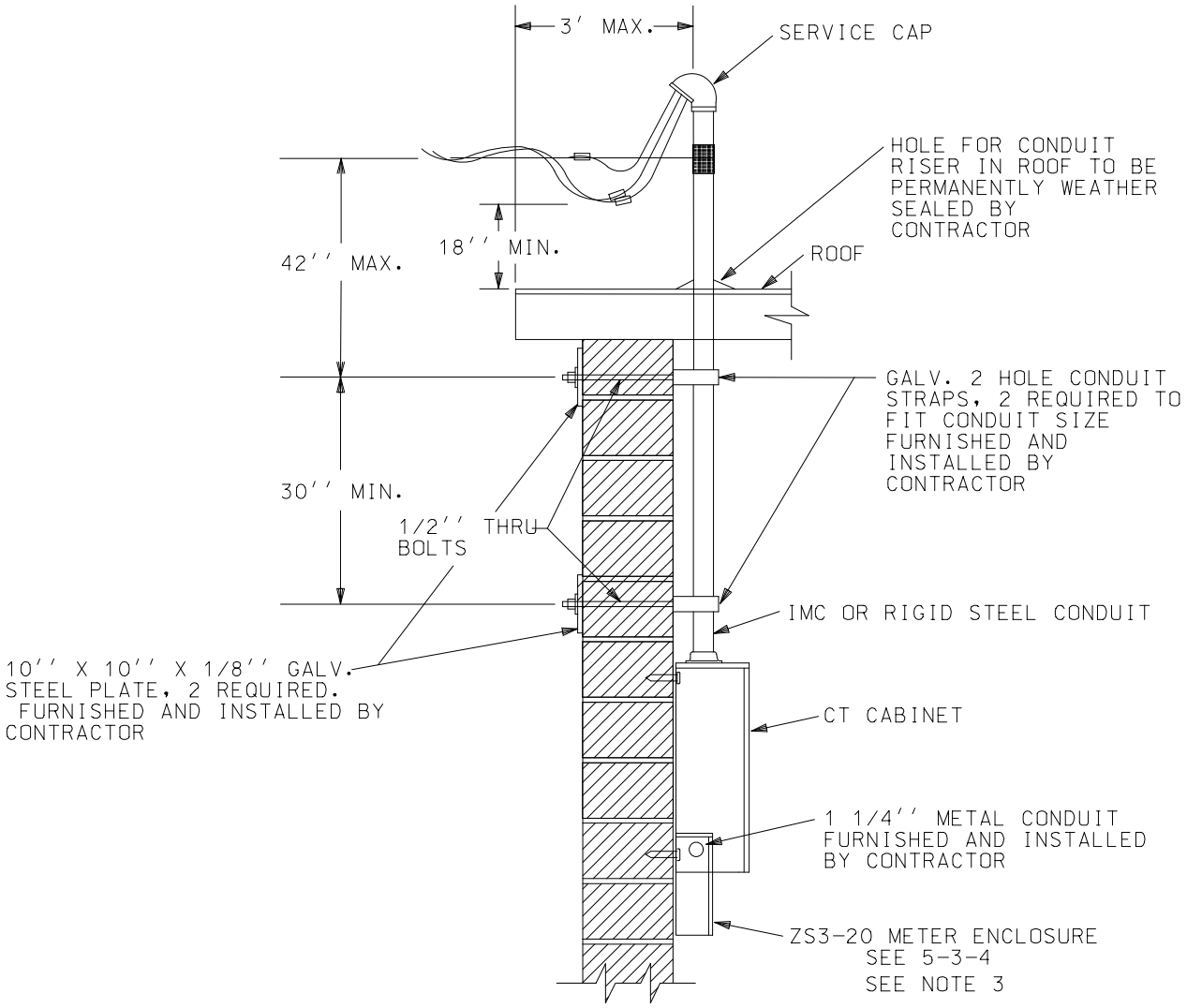

REFER TO SECTION 5 FOR METER EQUIPMENT MOUNTING SPECIFICATIONS

NOTES:

1. CONTRACTOR SHALL IDENTIFY SERVICE ENTRANCE CONDUCTORS PER INSTRUCTIONS CONTAINED ON PAGE 4-4-4.
2. CT CABINET AND METER ENCLOSURE SHALL BE GROUPED TOGETHER EITHER INSIDE OR OUTSIDE THE BUILDING.
3. ANY BOND BETWEEN THE METER ENCLOSURE AND JOINT USERS THAT INTERFERES WITH REMOVING THE COVER ON THE METER BOX IS A VIOLATION OF NEC 250.94 (3). THE JOINT USER WHO CREATED THE VIOLATION MUST CORRECT THE SITUATION.

DTE ELECTRIC COMPANY ASSUMES NO RESPONSIBILITY FOR INJURY OR DAMAGE ARISING FROM THE USE OF THIS SPECIFICATION DIAGRAM.

ANGLE SERVICE RISER
REFERENCE: O.H. DETAIL 918

MAXIMUM ALLOWABLE LOAD			
TOP HOLE	1100 LBS	50''	UNSUPPORTED LENGTH
CENTER HOLE	1225 LBS	45''	UNSUPPORTED LENGTH
BOTTOM HOLE	1375 LBS	40''	UNSUPPORTED LENGTH

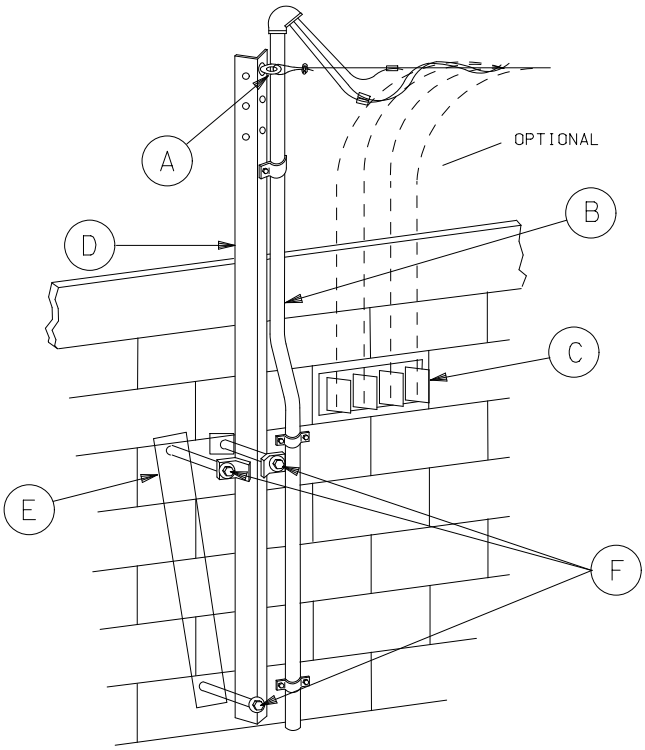

STRAIGHT ANGLE SERVICE RISER

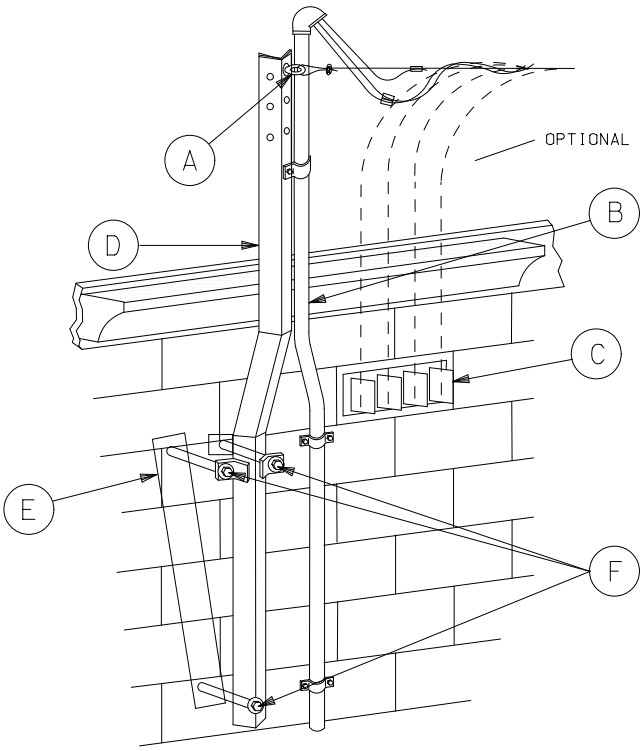

OFFSET ANGLE SERVICE RISER

LEGEND:

A. 5/8'' X 1-3/4'' GALVANIZED BOLT, NUT AND EYENUT FURNISHED AND INSTALLED BY DTE
B. SERVICE ENTRANCE CONDUIT (RIGID OR IMC) FURNISHED AND INSTALLED BY CONTRACTOR.
C. BUS SERVICE ENTRANCE FURNISHED AND INSTALLED BY CONTRACTOR.
D. SERVICE RISER FURNISHED AND INSTALLED BY CONTRACTOR. SEE DETAIL ON PAGE 4-4-42.
E. BACK PLATE FURNISHED AND INSTALLED BY CONTRACTOR. BACK PLATE WILL BE INSTALLED ON SIDE OF RISER OPPOSITE SERVICE DROP.
F. 5/8'' GALVANIZED BOLT, NUT AND WASHERS FURNISHED AND INSTALLED BY CONTRACTOR. 12'' FOR 8'' WALL, 16'' FOR 12'' WALL AND 20'' FOR 16'' WALL.

NOTES:

1. DTE PLANNER SHALL DETERMINE THE NEED, LOCATION, AND TYPE OF RISER INSTALLATION BASED ON SERVICE WIRE TENSION AS A RESULT OF TYPE, SIZE AND LENGTH OF SERVICE
2. THE SERVICE RISER SHALL BE LOCATED ON THE OUTSIDE WALL OF THE BUILDING NEAREST THE POLE FROM WHICH THE SERVICE DROP WILL BE RUN AND SITUATED TO PROVIDE A CLEAR PATH BETWEEN THE RISER AND THE POLE.
3. SEE PAGE 4-4-5 FOR CLEARANCES.
4. THE RISER WILL NOT BE ATTACHED TO A PARAPET WALL OR LOCATED NEAR BUILDING CORNER, DOOR OR WINDOW OPENINGS.
5. CONTRACTOR SHALL IDENTIFY SERVICE ENTRANCE CONDUCTORS PER INSTRUCTIONS CONTAINED ON PAGE 4-4-4.

DTE ELECTRIC COMPANY ASSUMES NO RESPONSIBILITY FOR INJURY OR DAMAGE ARISING FROM THE USE OF THIS SPECIFICATION DIAGRAM.

ANGLE SERVICE RISER ASSEMBLY

REFERENCE: O.H.L. DETAIL 918

BILL OF MATERIAL

ITEM	DESCRIPTION
1	3'' X 3'' X 3/8'' X 7'-0'' ANGLE (CUT & WELD)
2	3'' X 3/8'' X 4'' BAR
3	2 1/2'' X 1/4'' X 37'' BAR

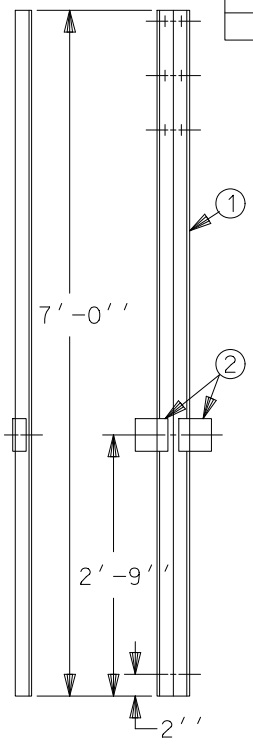

STRAIGHT ANGLE

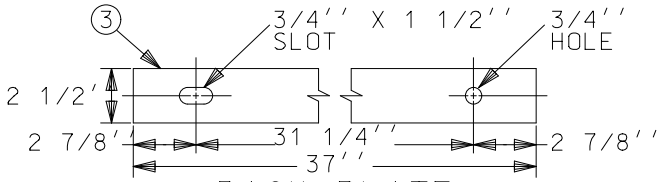

BACK PLATE

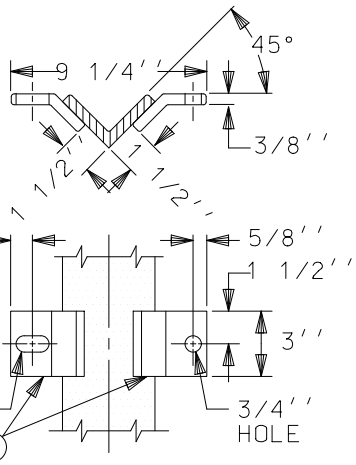

MOUNTING PLATES

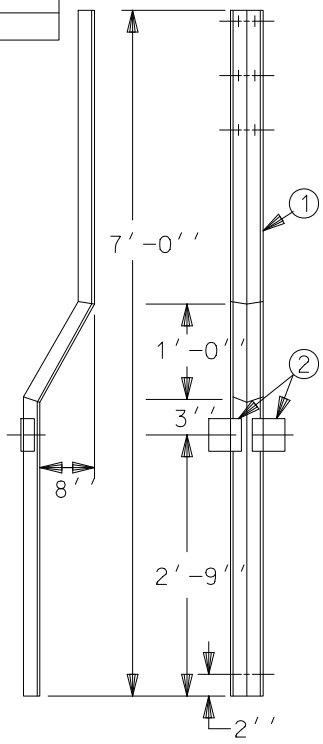

OFFSET ANGLE

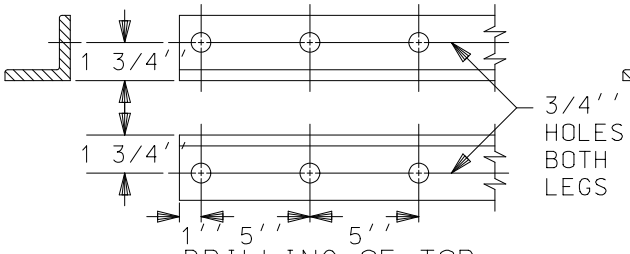

DRILLING OF TOP END OF RISER

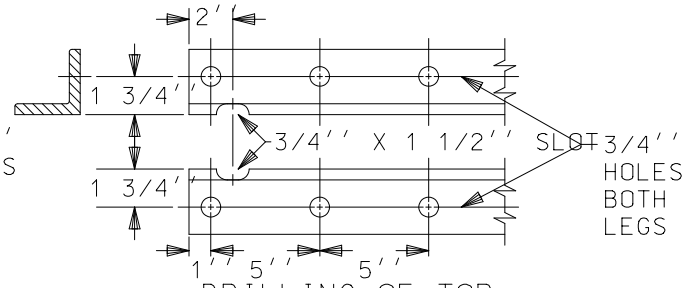

DRILLING OF TOP END OF RISER

NOTES:

1. THE DESIGN CONSISTS OF A STEEL ANGLE CUT AND WELDED INTO RISER AND FITTED WITH STEEL MOUNTING PLATES AS SHOWN IN DRAWING AND BILL OF MATERIAL.
2. ALL PARTS SHALL BE GALVANIZED IN ACCORDANCE WITH THE AMERICAN SOCIETY FOR TESTING MATERIALS SPECIFICATIONS FOR ZINC (HOT GALVANIZED) COATINGS ON STRUCTURAL STEEL SHAPES.

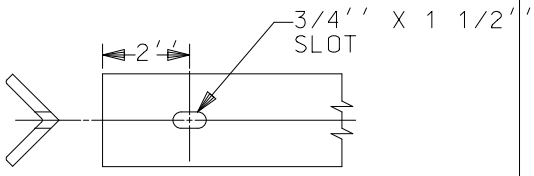

DRILLING OF BOTTOM END OF RISER

DTE ELECTRIC COMPANY ASSUMES NO RESPONSIBILITY FOR INJURY OR DAMAGE ARISING FROM THE USE OF THIS SPECIFICATION DIAGRAM.

OFFSET DOUBLE ANGLE SERVICE RISER
REFERENCE: O.H. DETAIL 918A & 921

MAXIMUM ALLOWABLE LOAD
2200 LBS WITH ADEQUATE WALL SUPPORT
BACK BRACING REQUIRED TO REDUCE TENSION ON INADEQUATE WALL OR WHEN LINE TENSION EXCEEDS 2200 LBS

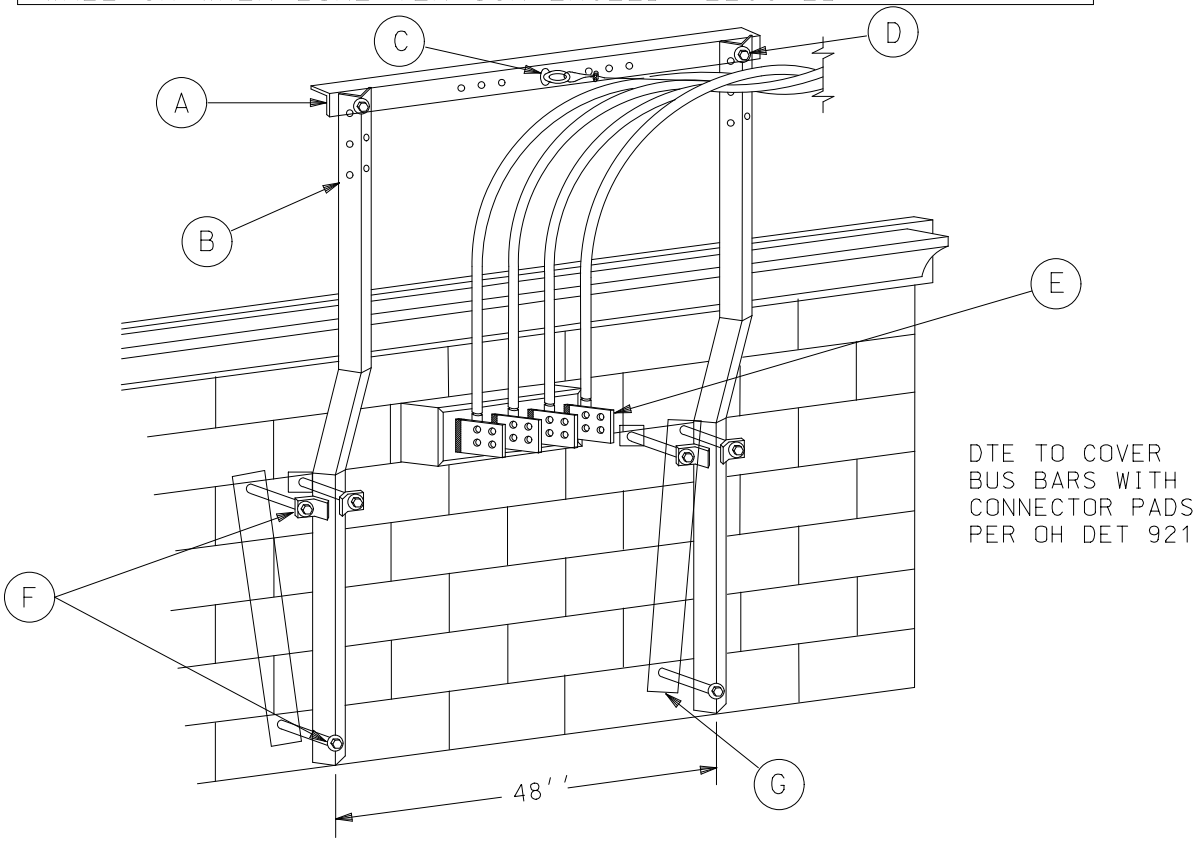

LEGEND:

A. DOUBLE RISER BRIDGE FURNISHED AND INSTALLED BY CONTRACTOR.
B. ANGLE SERVICE RISERS FURNISHED AND INSTALLED BY CONTRACTOR.
C. 5/8'' X 1 3/4'' BOLT, NUT AND EYENUT FURNISHED AND INSTALLED BY DTE.
D. TWO 5/8'' X 3 1/2'' GALVANIZED BOLTS, NUTS AND 4 WASHERS FURNISHED AND INSTALLED BY CONTRACTOR.
E. BUS SERVICE ENTRANCE FURNISHED AND INSTALLED BY CONTRACTOR.
F. 5/8'' GALVANIZED BOLTS, NUTS AND WASHERS FURNISHED AND INSTALLED BY CONTRACTOR. 12'' BOLTS FOR 8'' WALL, 16'' BOLTS FOR 12'' WALL AND 20'' BOLTS FOR 16'' WALL.
G. BACK PLATE FURNISHED AND INSTALLED BY CONTRACTOR.

NOTES:

1. DTE PLANNER SHALL DETERMINE THE NEED, LOCATION, AND TYPE OF RISER INSTALLATION BASED ON SERVICE WIRE TENSION AS A RESULT OF TYPE, SIZE AND LENGTH OF SERVICE
2. THE SERVICE RISER SHALL BE LOCATED ON THE OUTSIDE WALL OF THE BUILDING NEAREST THE POLE FROM WHICH THE SERVICE DROP WILL BE RUN AND SITUATED TO PROVIDE A CLEAR PATH BETWEEN THE RISER AND THE POLE.
3. SEE PAGE 4-4-5 FOR CLEARANCES.
4. THE RISER WILL NOT BE ATTACHED TO A PARAPET WALL OR LOCATED NEAR BUILDING CORNER, DOOR OR WINDOW OPENINGS.
5. CONTRACTOR SHALL IDENTIFY SERVICE ENTRANCE CONDUCTORS PER INSTRUCTIONS CONTAINED ON PAGE 4-4-4.

DTE ELECTRIC COMPANY ASSUMES NO RESPONSIBILITY FOR INJURY OR DAMAGE ARISING FROM THE USE OF THIS SPECIFICATION DIAGRAM.

OFFSET ANGLE SERVICE RISER

BILL OF MATERIAL

ITEM	DESCRIPTION
1	3'' X 3'' X 3/8'' X 7'-3'' ANGLE (CUT & WELD)
2	3'' X 3/8'' X 4'' BAR
3	2 1/2'' X 1/4'' X 37'' BAR
4	3'' X 3'' X 3/8'' X 54'' ANGLE

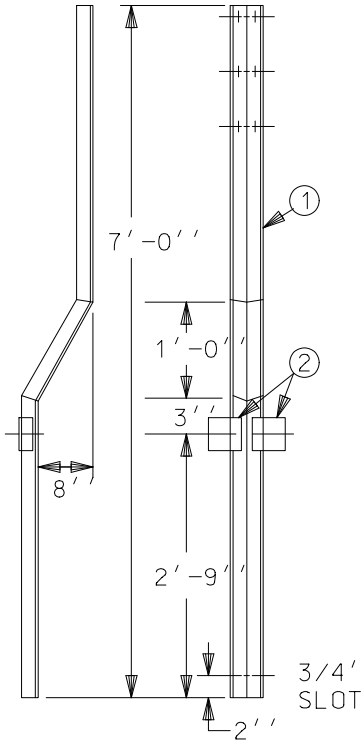

RISER ASSEMBLY
GALVANIZE AFTER FABRICATION

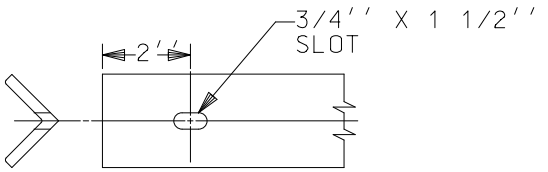

DRILLING OF BOTTOM
END OF RISER

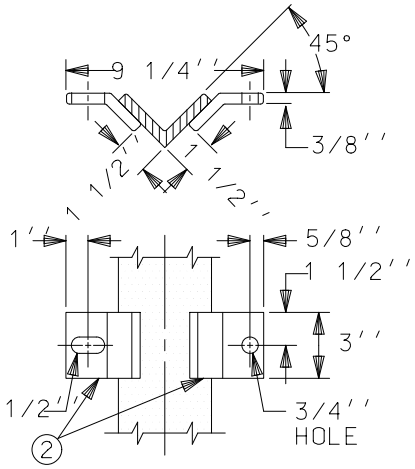

MOUNTING PLATES

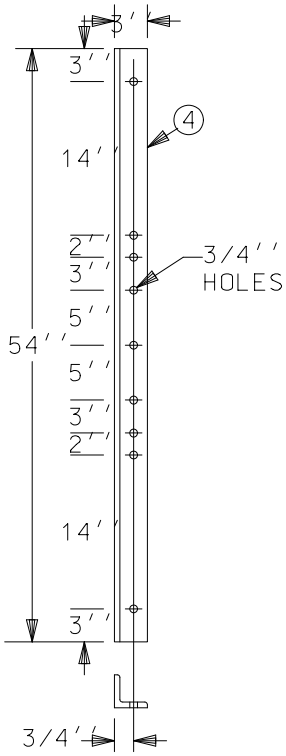

DOUBLE RISER BRIDGE

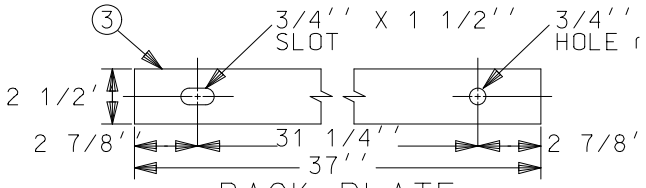

BACK PLATE
STEEL

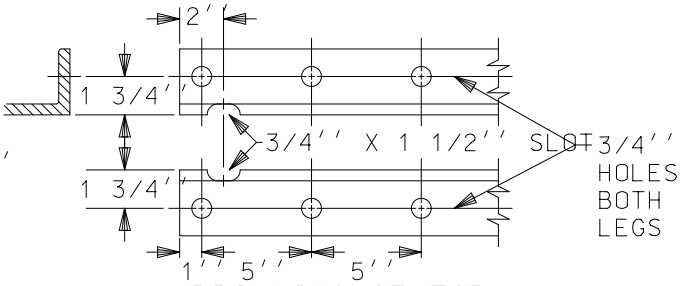

DRILLING OF TOP
END OF RISER

NOTES :

1. THE DESIGN CONSISTS OF A STEEL ANGLE CUT AND WELDED INTO AN OFFSET RISER AND FITTED WITH STEEL MOUNTING PLATES FOR SINGLE USERS, AND A BRIDGE FOR DOUBLE USERS AS SHOWN IN DRAWING AND BILL OF MATERIAL.
2. ALL PARTS SHALL BE GALVANIZED IN ACCORDANCE WITH THE AMERICAN SOCIETY FOR TESTING MATERIALS SPECIFICATIONS FOR ZINC (HOT GALVANIZED) COATINGS ON STRUCTURAL STEEL SHAPES.

DTE ELECTRIC COMPANY ASSUMES NO RESPONSIBILITY FOR INJURY
OR DAMAGE ARISING FROM THE USE OF THIS SPECIFICATION DIAGRAM.

STRAIGHT I BEAM SERVICE RISER
REFERENCE: O.H. DETAIL 919 & 921

MAXIMUM ALLOWABLE LOAD WITHOUT BACK GUY			
TOP HOLE	1100 LBS	70''	UNSUPPORTED LENGTH
CENTER HOLE	1225 LBS	65''	UNSUPPORTED LENGTH
BOTTOM HOLE	1375 LBS	60''	UNSUPPORTED LENGTH

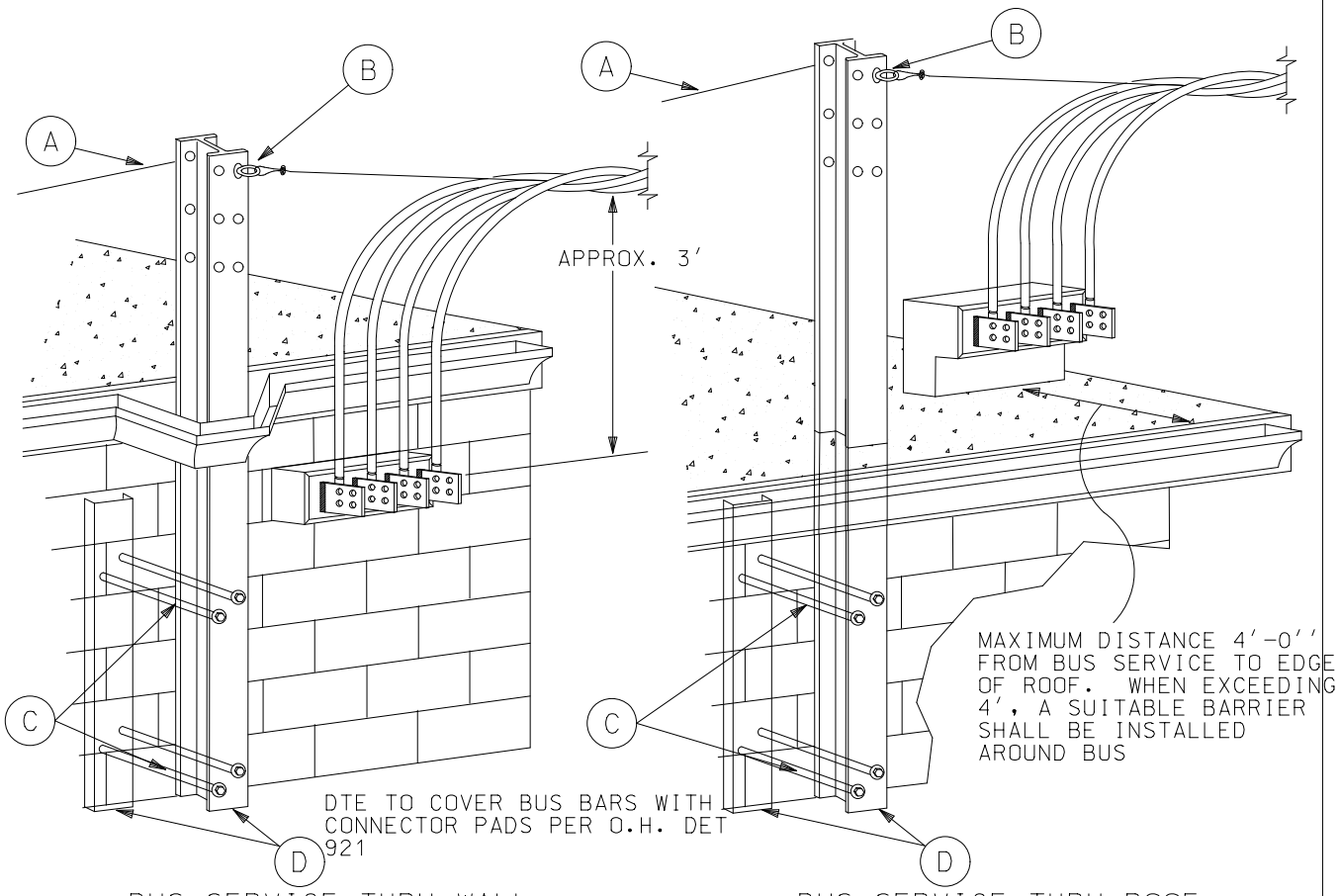

BUS SERVICE THRU WALL

BUS SERVICE THRU ROOF

LEGEND:

A. BACK GUY FURNISHED AND INSTALLED BY CONTRACTOR. (WHEN TENSION EXCEEDS LOADS SHOWN, A BACK GUY IN LINE WITH THE SERVICE DROP WILL BE REQUIRED.)

B. 5/8'' X 6'' EYEBOLT FURNISHED AND INSTALLED BY DTE.

C. 5/8'' GALVANIZED BOLTS, NUTS AND WASHERS FURNISHED AND INSTALLED BY CONTRACTOR.

D. I-BEAM RISER AND BACKUP MEMBER FURNISHED AND INSTALLED BY CONTRACTOR. SEE DETAIL DRAWING ON PAGE 4-4-44.

NOTES:

1. DTE PLANNER SHALL DETERMINE THE NEED, LOCATION, AND TYPE OF RISER INSTALLATION BASED ON SERVICE WIRE TENSION AS A RESULT OF TYPE, SIZE AND LENGTH OF SERVICE
2. THE SERVICE RISER SHALL BE LOCATED ON THE OUTSIDE WALL OF THE BUILDING NEAREST THE POLE FROM WHICH THE SERVICE DROP WILL BE RUN AND SITUATED TO PROVIDE A CLEAR PATH BETWEEN THE RISER AND THE POLE.
3. SEE PAGE 4-4-5 FOR CLEARANCES.
4. THE RISER WILL NOT BE ATTACHED TO A PARAPET WALL OR LOCATED NEAR BUILDING CORNER, DOOR OR WINDOW OPENINGS.
5. CONTRACTOR SHALL IDENTIFY SERVICE ENTRANCE CONDUCTORS PER INSTRUCTIONS CONTAINED ON PAGE 4-4-4.

DTE ELECTRIC COMPANY ASSUMES NO RESPONSIBILITY FOR INJURY OR DAMAGE ARISING FROM THE USE OF THIS SPECIFICATION DIAGRAM.

STRAIGHT I BEAM SERVICE RISER DETAILS

REFERENCE - OHL MANUAL DETAIL 919

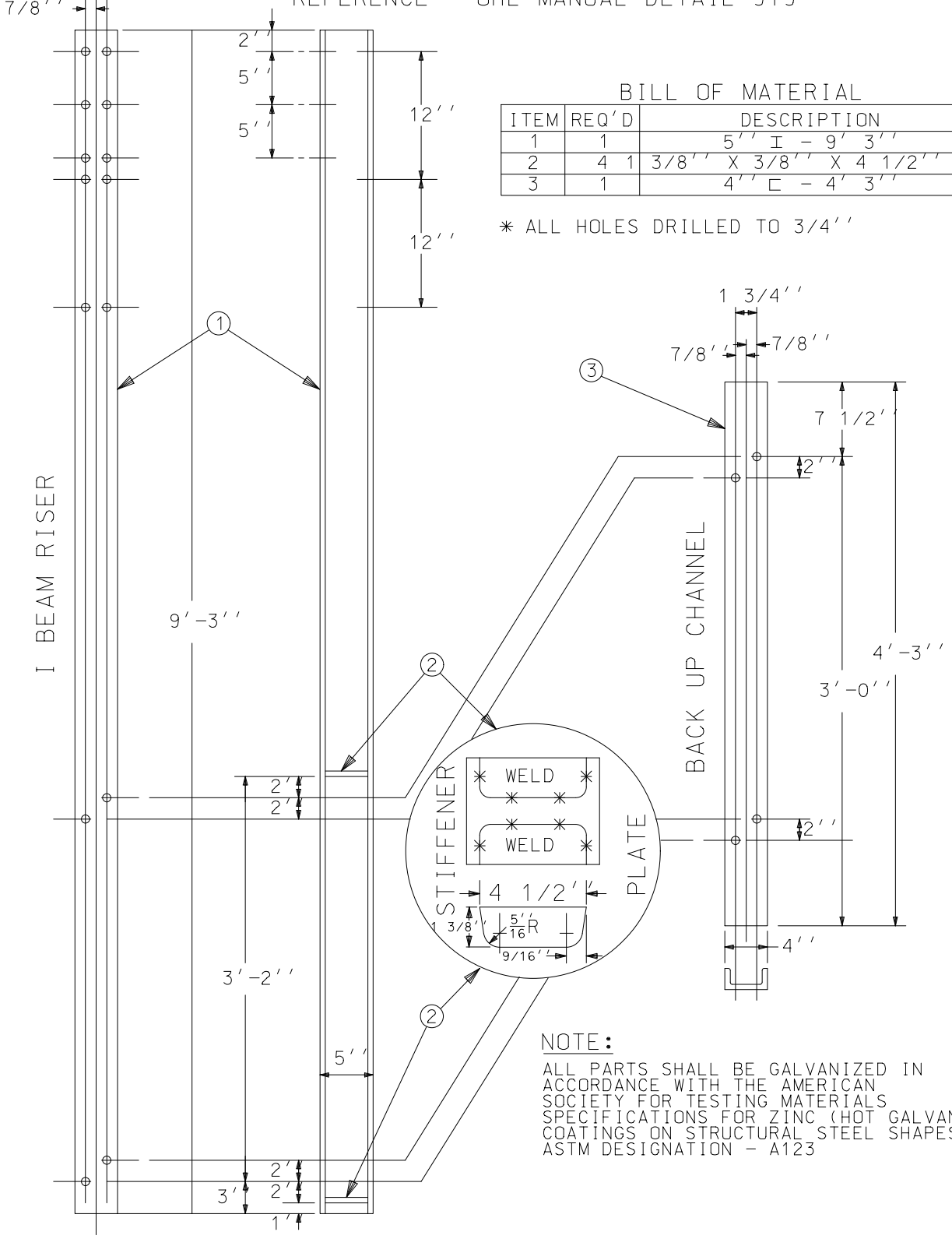

BILL OF MATERIAL

ITEM	REQ'D	DESCRIPTION
1	1	5'' I - 9' 3''
2	4 1	3/8'' X 3/8'' X 4 1/2'' BAR
3	1	4'' ⊏ - 4' 3''

* ALL HOLES DRILLED TO 3/4''

NOTE:

ALL PARTS SHALL BE GALVANIZED IN ACCORDANCE WITH THE AMERICAN SOCIETY FOR TESTING MATERIALS SPECIFICATIONS FOR ZINC (HOT GALVANIZED) COATINGS ON STRUCTURAL STEEL SHAPES. ASTM DESIGNATION - A123

DTE ELECTRIC COMPANY ASSUMES NO RESPONSIBILITY FOR INJURY OR DAMAGE ARISING FROM THE USE OF THIS SPECIFICATION DIAGRAM.

OFFSET I BEAM SERVICE RISER

REFERENCE: O.H. DETAIL 919 & 921

MAXIMUM ALLOWABLE LOAD WITHOUT BACK GUY			
TOP HOLE	1100 LBS	70''	UNSUPPORTED LENGTH
CENTER HOLE	1225 LBS	65''	UNSUPPORTED LENGTH
BOTTOM HOLE	1375 LBS	60''	UNSUPPORTED LENGTH

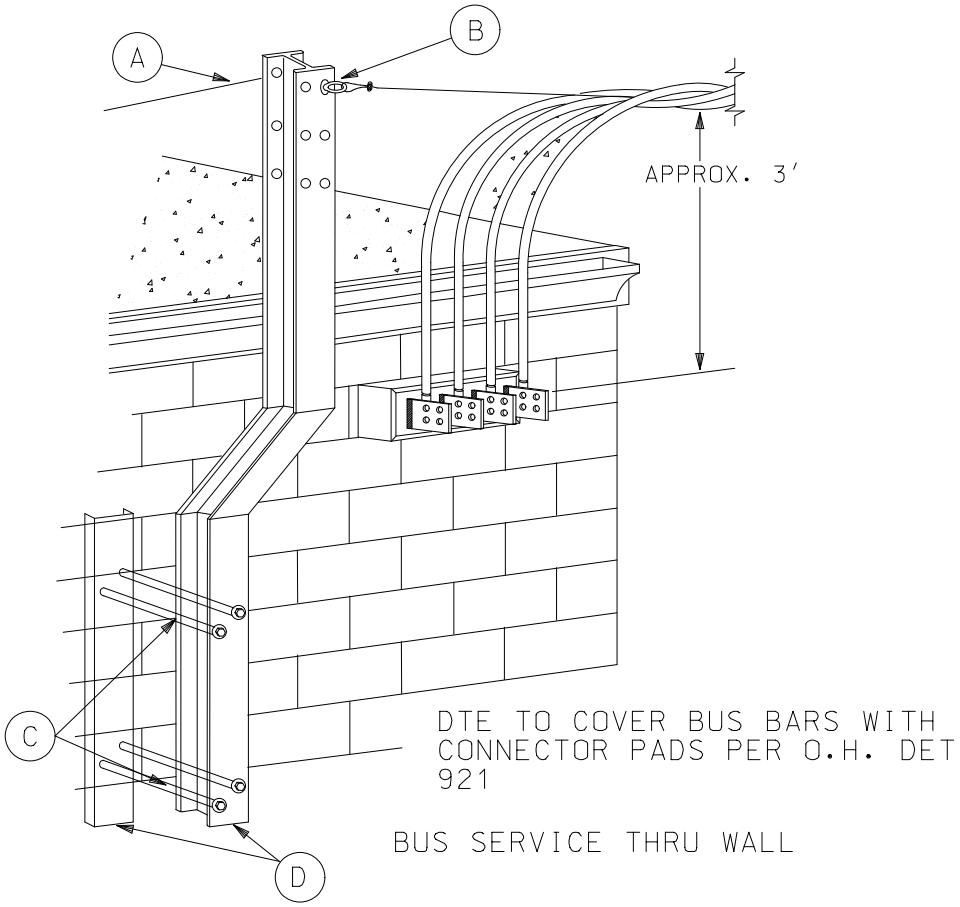

LEGEND:

A. BACK GUY FURNISHED AND INSTALLED BY CONTRACTOR. (WHEN TENSION EXCEEDS LOADS SHOWN, A BACK GUY IN LINE WITH THE SERVICE DROP WILL BE REQUIRED.)

B. $^{5}/_{8}$'' X 6'' EYEBOLT FURNISHED AND INSTALLED BY DTE.

C. 5/8'' GALVANIZED BOLTS, NUTS AND WASHERS FURNISHED AND INSTALLED BY CONTRACTOR.

D. I-BEAM RISER AND BACKUP MEMBER FURNISHED AND INSTALLED BY CONTRACTOR. SEE DETAIL DRAWING ON PAGE 4-4-44.

NOTES:

1. THE DTE PLANNER SHALL DETERMINE THE NEED, LOCATION AND TYPE OF SERVICE RISER INSTALLATION.
2. THE SERVICE RISER SHALL BE LOCATED ON THE OUTSIDE WALL OF THE BUILDING NEAREST THE POLE FROM WHICH THE SERVICE DROP WILL BE RUN AND SITUATED TO PROVIDE A CLEAR PATH BETWEEN THE RISER AND THE POLE.
3. SEE PAGE 4-4-5 FOR CLEARANCES.
4. THE RISER WILL NOT BE ATTACHED TO A PARAPET WALL OR LOCATED NEAR BUILDING CORNER, DOOR OR WINDOW OPENINGS.
5. CONTRACTOR SHALL IDENTIFY SERVICE ENTRANCE CONDUCTORS PER INSTRUCTIONS CONTAINED ON PAGE 4-4-4.

DTE ELECTRIC COMPANY ASSUMES NO RESPONSIBILITY FOR INJURY OR DAMAGE ARISING FROM THE USE OF THIS SPECIFICATION DIAGRAM.

OFFSET I BEAM SERVICE RISER DETAILS

REFERENCE - OHL MANUAL DETAIL 919

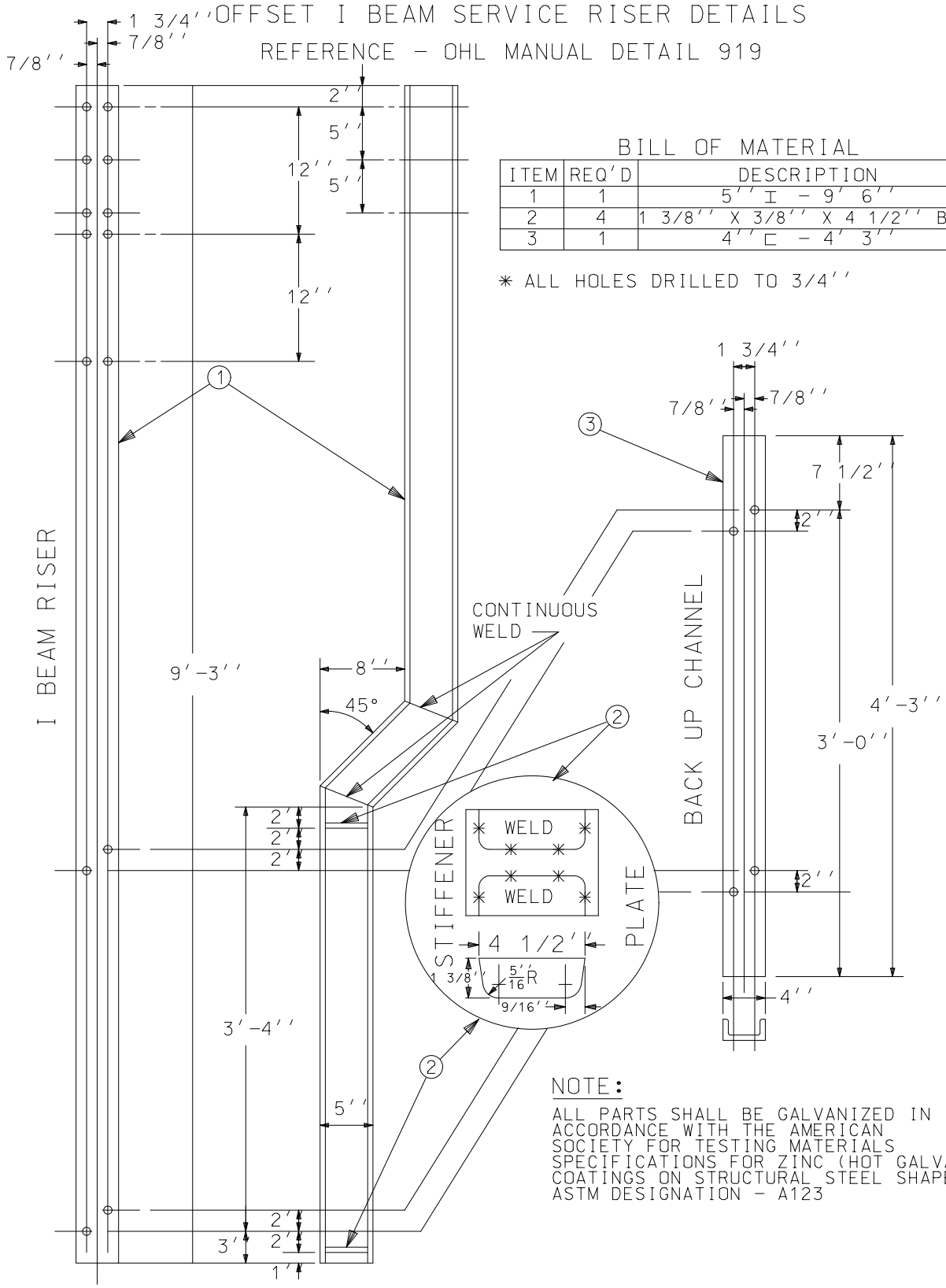

BILL OF MATERIAL

ITEM	REQ'D	DESCRIPTION
1	1	5'' I - 9' 6''
2	4	1 3/8'' X 3/8'' X 4 1/2'' BAR
3	1	4'' ⊏ - 4' 3''

* ALL HOLES DRILLED TO 3/4''

NOTE:

ALL PARTS SHALL BE GALVANIZED IN ACCORDANCE WITH THE AMERICAN SOCIETY FOR TESTING MATERIALS SPECIFICATIONS FOR ZINC (HOT GALVANIZED) COATINGS ON STRUCTURAL STEEL SHAPES. ASTM DESIGNATION - A123

DTE ELECTRIC COMPANY ASSUMES NO RESPONSIBILITY FOR INJURY OR DAMAGE ARISING FROM THE USE OF THIS SPECIFICATION DIAGRAM.

SERVICE DROP SUPPORT POLE
BUS SERVICE ENTRANCE THRU WALL

REFERENCE: O.H. DETAIL 917 & 921

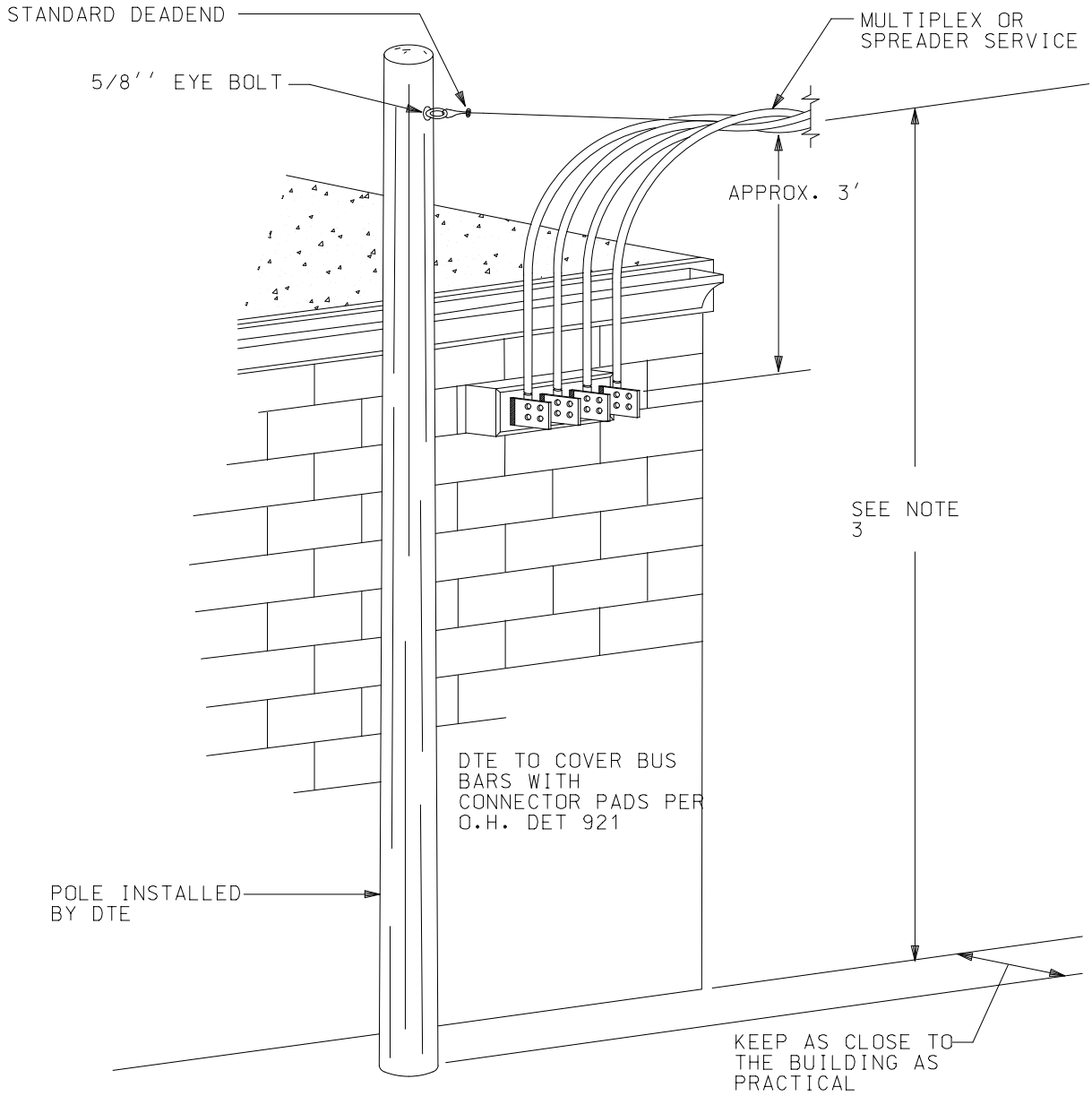

NOTES:

1. THE DTE PLANNER SHALL DETERMINE THE NEED, LOCATION AND TYPE OF SERVICE RISER INSTALLATION.
2. OBTAINING SUFFICIENT SERVICE ATTACHMENT HEIGHT IS BEST ACCOMPLISHED BY INSTALLING ADEQUATE SERVICE RISERS. SERVICE POLES SHOULD BE USED ONLY WHEN THE USE OF A SERVICE RISER IS NOT POSSIBLE.
3. SEE PAGE 4-4-5 FOR CLEARANCES.
4. CONTRACTOR SHALL IDENTIFY SERVICE ENTRANCE CONDUCTORS PER INSTRUCTIONS CONTAINED ON PAGE 4-4-4.

DTE ELECTRIC COMPANY ASSUMES NO RESPONSIBILITY FOR INJURY OR DAMAGE ARISING FROM THE USE OF THIS SPECIFICATION DIAGRAM.

SERVICE DROP SUPPORT POLE
BUS SERVICE ENTRANCE THRU ROOF

REFERENCE: O.H. DETAIL 917 & 921

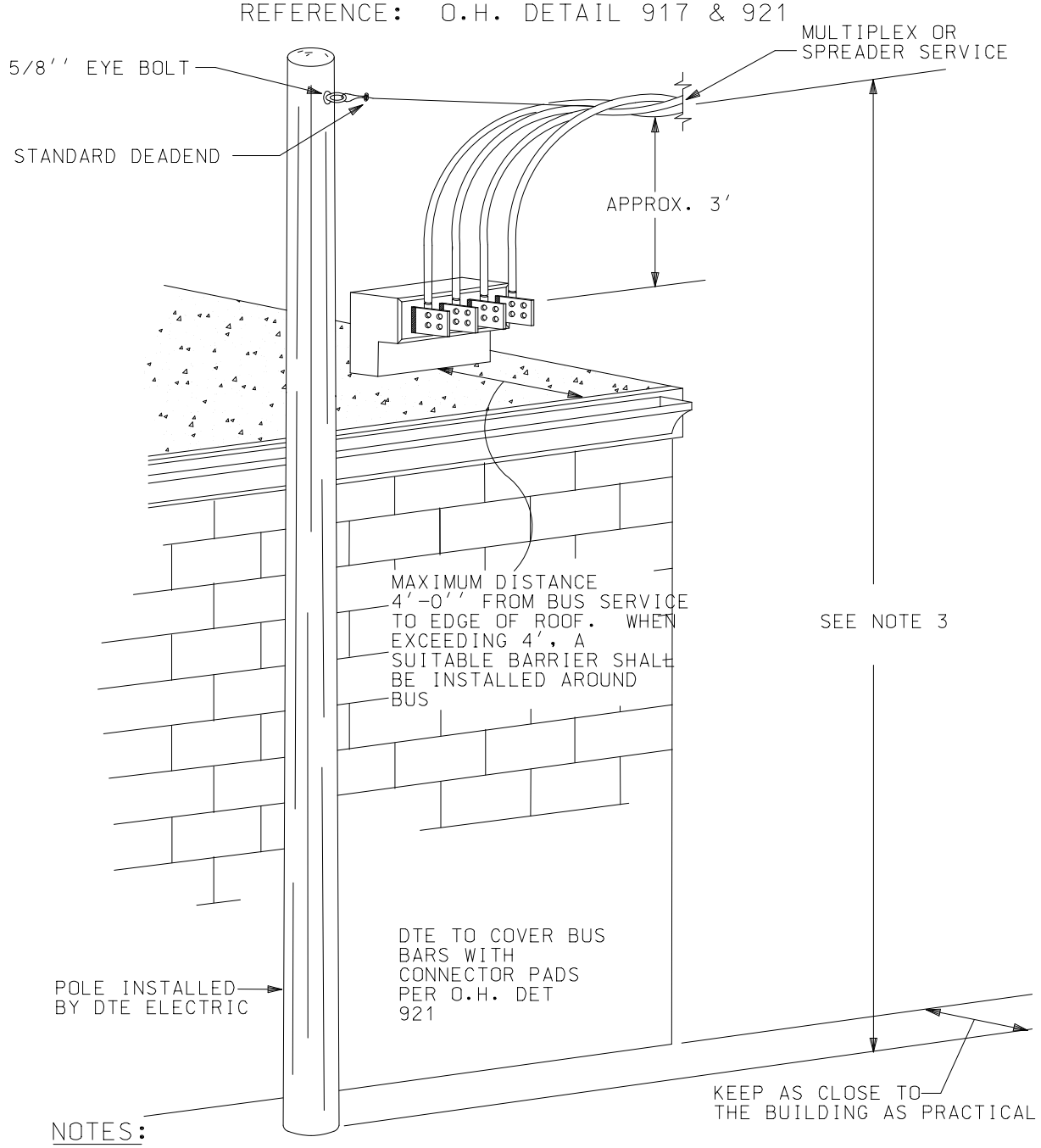

NOTES:

1. THE DTE PLANNER SHALL DETERMINE THE NEED, LOCATION AND TYPE OF SERVICE RISER INSTALLATION.
2. OBTAINING SUFFICIENT SERVICE ATTACHMENT HEIGHT IS BEST ACCOMPLISHED BY INSTALLING ADEQUATE SERVICE RISERS. SERVICE POLES SHOULD BE USED ONLY WHEN THE USE OF A SERVICE RISER IS NOT POSSIBLE.
3. SEE PAGE 4-4-5 FOR CLEARANCES.
4. CONTRACTOR SHALL IDENTIFY SERVICE ENTRANCE CONDUCTORS PER INSTRUCTIONS CONTAINED ON PAGE 4-4-4.

DTE ELECTRIC COMPANY ASSUMES NO RESPONSIBILITY FOR INJURY OR DAMAGE ARISING FROM THE USE OF THIS SPECIFICATION DIAGRAM.

1-9-46

OVERHEAD SERVICE TERMINAL CABINET

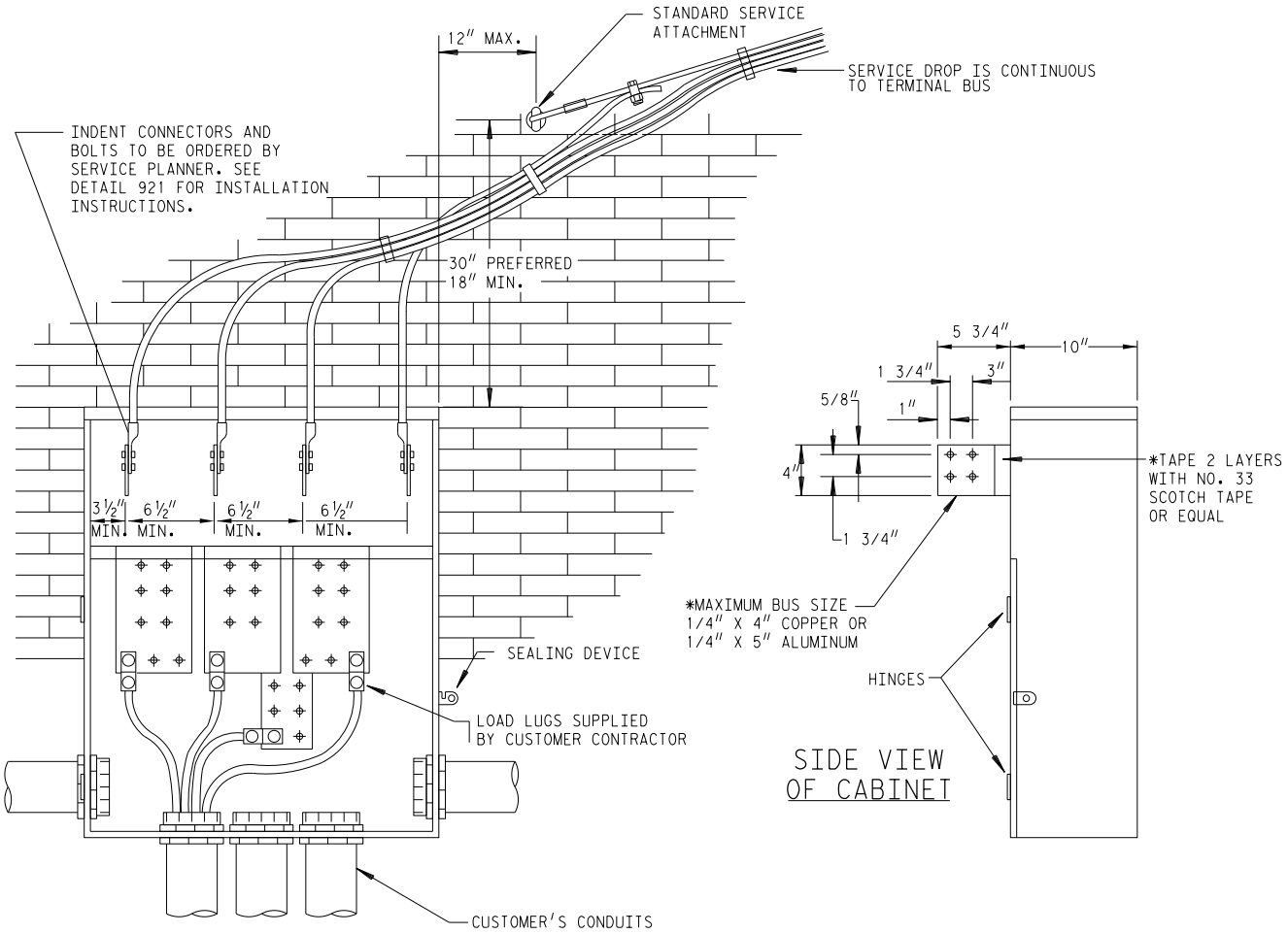

DETAIL 946

SIZE OF CABINET 34″ H X 28″ W X 10″ D
FURNISHED BY CUSTOMER

REFER TO PAGE 1-11-26 (SIM-ESIG 4-4-5)
FOR MIN. SERVICE DROP CLEARANCES

NOTES:

1. THIS CABINET SHALL BE FURNISHED AND INSTALLED BY CONTRACTOR WHEN THE NUMBER OF LOAD CONDUCTORS PER PHASE AT ONE SERVICE POINT EXCEED THE FOLLOWING:

CUSTOMER'S WIRE SIZE	NO. OF S.E. CONDUCTORS PER PHASE
3/0	4 (NORMALLY)
250 kcmil OR 4/0	3
350kcmil	2
500kcmil	2

2. THE CABINET WILL ACCOMODATE ONE TO FIVE SETS OF CUSTOMER'S LOAD WIRES AND FROM ONE TO THREE SINGLE OR THREE PHASE DTE SERVICE DROPS.

*3. ELECTRICAL GRADE COPPER OR ALUMINUM BUS ARE ACCEPTABLE AS CURRENT CARRYING CONDUCTORS.

*4. BRUSHING, BUFFING OR POLISHING PLATED ALUMINUM WILL REMOVE THE PROTECTIVE PLATE THUS CAUSING UNDUE OXIDATION OF THE ALUMINUM.

1-9-52

TEMPORARY SERVICE

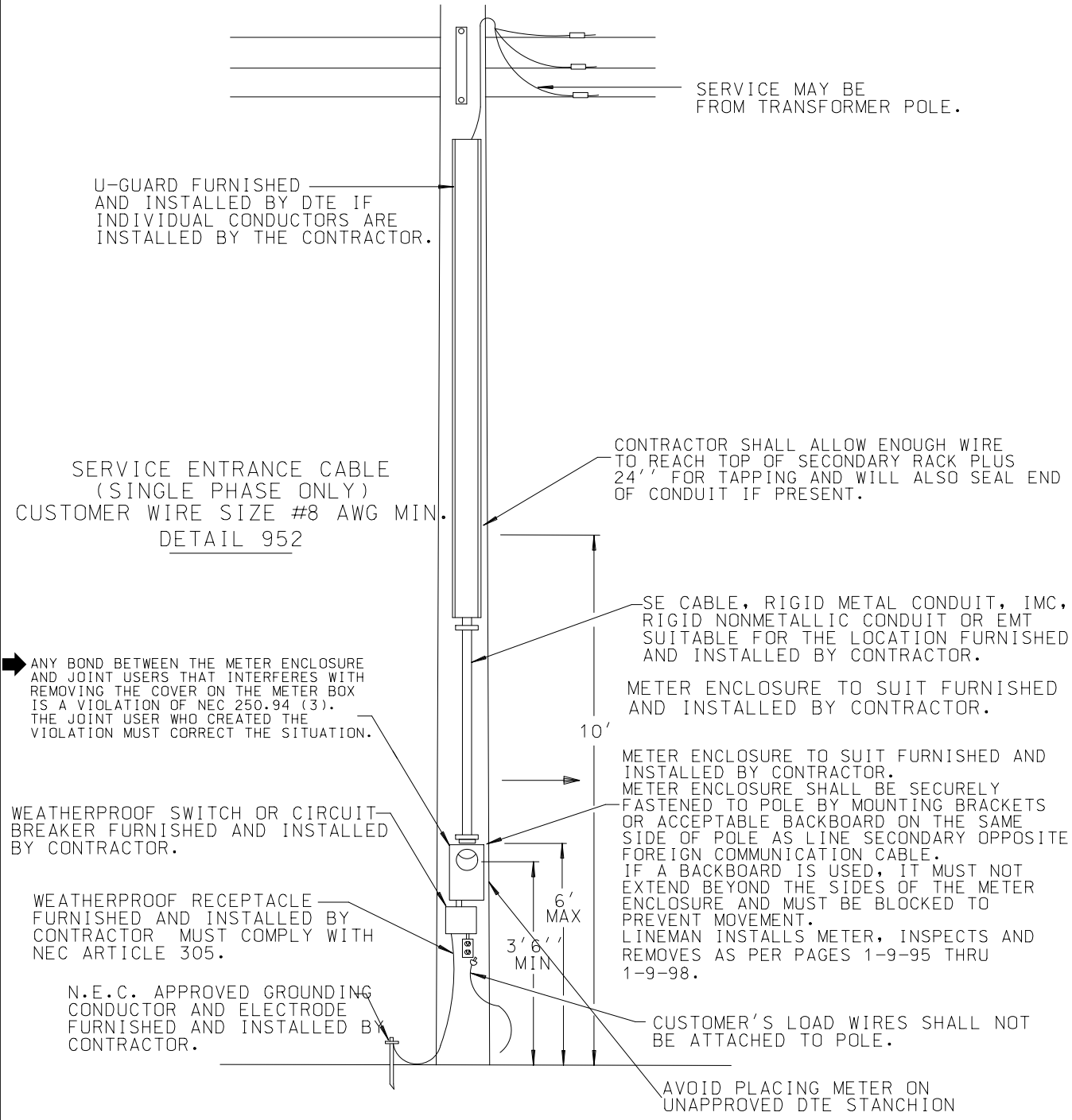

DTE ELECTRIC COMPANY ASSUMES NO RESPONSIBILITY FOR INJURY OR DAMAGE ARISING FROM THE USE OF THIS SPECIFICATION DIAGRAM.

TEMPORARY SERVICE
400 TO 800 AMPS

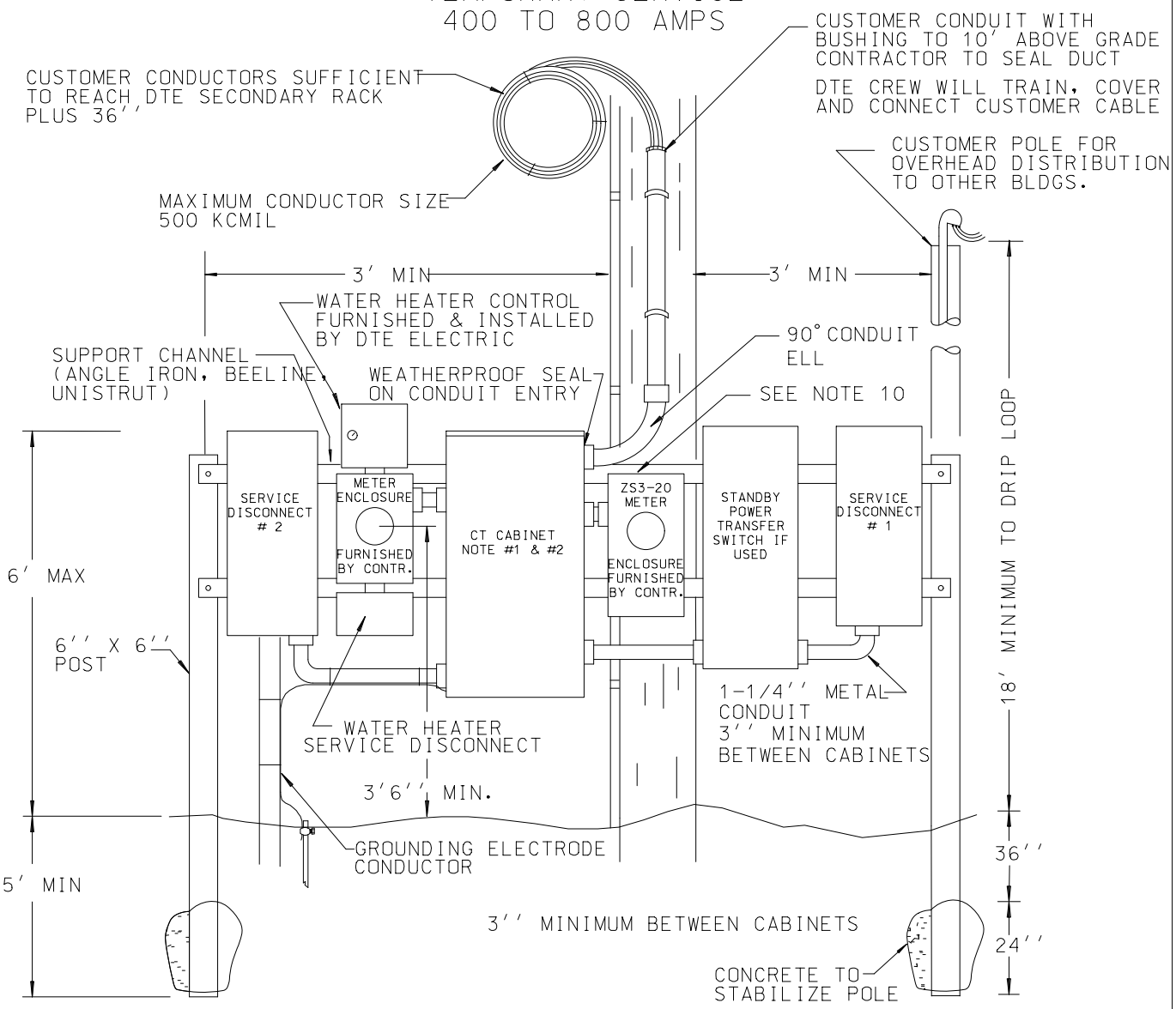

NOTES:

1. NO LINE OR LOAD CONDUCTORS THRU CENTER OF CT MOUNTING AREA.
2. IF 3ϕ 120/240V, POWER LEG ON CENTER BUS, 1ϕ USE RIGHT AND LEFT BUSES.
3. SERVICE EQUIPMENT OTHER THAN METER BOX IS MAINTAINED BY CUSTOMER.
4. METER BOX MUST BE INSTALLED 42'' MINIMUM HEIGHT TO CENTER OF METER FACE FROM GRADE AND 6' MAXIMUM TO TOP OF METER BOX.
5. SERVICE DISCONNECT AND RACEWAYS MUST BE RAINTIGHT. THE DISCONNECT IS SIZED, FURNISHED AND INSTALLED BY CUSTOMER.
6. A GROUND ROD MUST BE INSTALLED IN COMPLIANCE WITH N.E.C. ARTICLE 250.
7. SUPPORT CHANNEL OR ANGLES SHOULD BE BOLTED TO POST WITH 1/2'' BOLTS AND WASHERS, 3/8'' U BOLTS OR PIPE HANGER CLAMPS DESIGNED FOR THAT USE.
8. ADDRESS MUST BE PERMANENTLY MARKED ON METER ENCLOSURE. USE PERMANENT LETTERS OR STICKERS.
9. DTE POLE WILL BE SET ADJACENT TO BACK SIDE OF SUPPORT CHANNELS AND CENTERED IN REAR OF BOARD TO AVOID CUSTOMER'S POLE FALLING IN DTE LINE POLE HOLE DURING INSTALLATION. NO ATTACHMENTS TO POLE WILL BE ALLOWED TO FACILITATE MAINTENANCE AND REPLACEMENT OF THE POLE IN THE FUTURE.
10. ANY BOND BETWEEN THE METER ENCLOSURE AND JOINT USERS THAT INTERFERES WITH REMOVING THE COVER ON THE METER BOX IS A VIOLATION OF NEC 250.94 (3). THE JOINT USER WHO CREATED THE VIOLATION MUST CORRECT THE SITUATION.

DTE ELECTRIC COMPANY ASSUMES NO RESPONSIBILITY FOR INJURY OR DAMAGE ARISING FROM THE USE OF THIS SPECIFICATION DIAGRAM.

PERMANENT SERVICE NEXT TO LINE POLE

1. Scope.

(a) This specification covers the method to be used for the installation of service, meter equipment, and wiring adjacent to a joint use or non-joint use line pole.

(b) All material and workmanship must comply with specifications acceptable to DTE Electric.

2. Limited Use. This type of construction will be used *only* where no other meter location is readily available. A DTE Electric Planner shall approve each installation.

3. Rules and Regulations. When this equipment is fed from a foreign owned joint use pole, permission of the other utility company may be necessary.

4. Installation of Equipment.

(a) The outdoor meter enclosure shall be securely fastened to the support channel using galvanized metal nuts, bolts, and washers.

(b) Equipment on the support assembly must meet minimum requirements for clearance above finished grade and provide adequate access to the adjacent pole (see 4-9-2).

(c) Service disconnect must be located adjacent to meter to provide overcurrent protection for customer-owned underground cable (see 4-9-2).

5. Connection to Meter Equipment.

(a) Line conductors to meter enclosure will be furnished and installed by DTE Electric.

(b) Load conductors shall leave the equipment via underground construction. *No overhead load conductors are permitted.*

(c) Service and load connections shall be made in accordance with established practice for the type of meter equipment used.

→ **(d)** **Note:** Any bond between the meter enclosure and joint users hat interferes with removing the cover on the meter box is a violation of NEC 250.94 (3). The joint user who created the violation must correct the situation.

PERMANENT SERVICE
METER EQUIPMENT NEXT TO LINE POLE

3-WIRE SINGLE PHASE 120/240 VOLT
4-WIRE THREE PHASE 120/240 VOLT
3/0 & 350kcmil SERVICES

ONLY UNDERGROUND CONDUCTORS TO LOAD ARE PERMITTED FROM THIS TYPE OF INSTALLATION

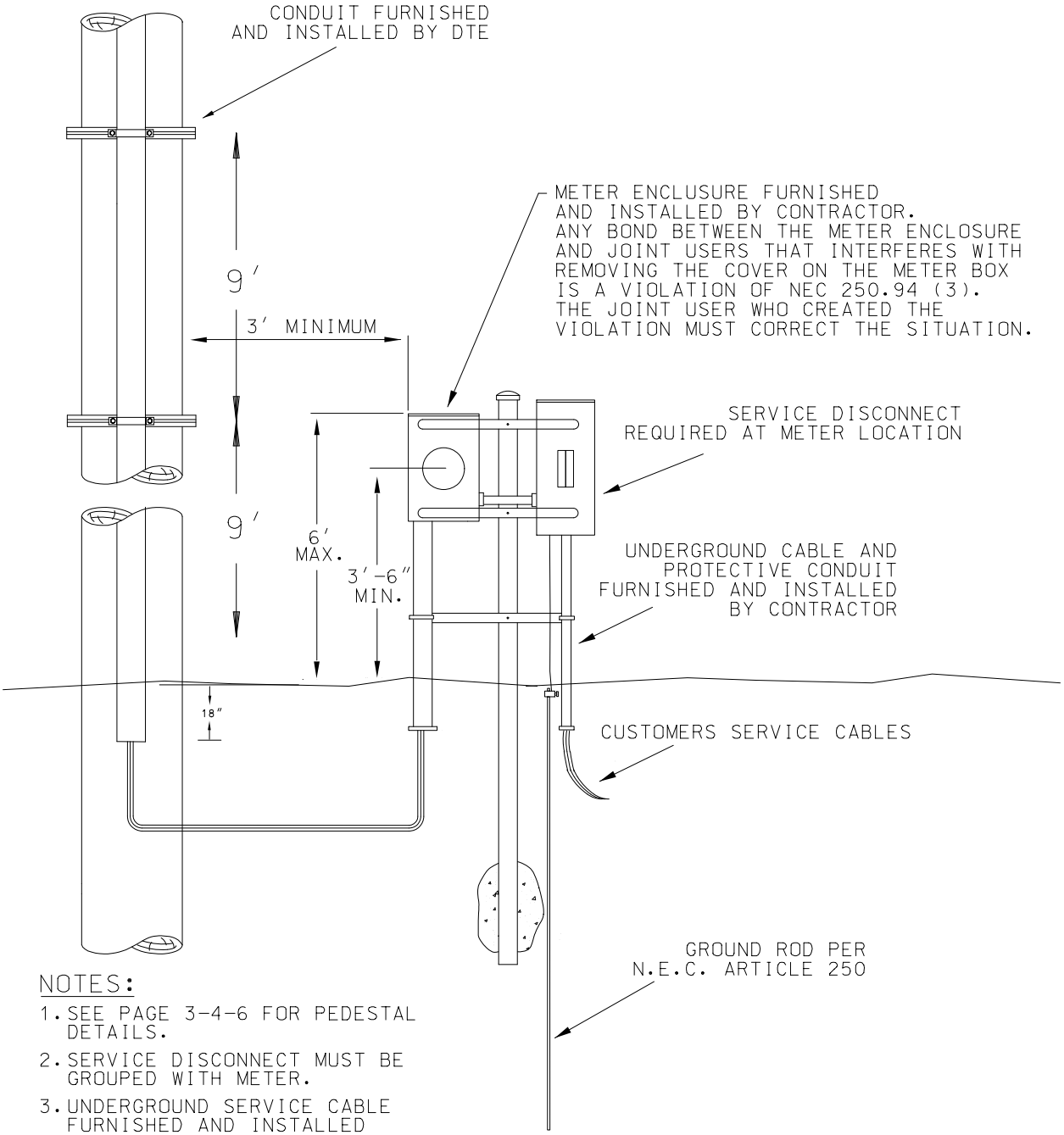

NOTES:

1. SEE PAGE 3-4-6 FOR PEDESTAL DETAILS.
2. SERVICE DISCONNECT MUST BE GROUPED WITH METER.
3. UNDERGROUND SERVICE CABLE FURNISHED AND INSTALLED BY DTE.
4. SEE 5-3-18 FOR PROPER CONDUIT PLACEMENT AND CONDUCTOR TRAINING

DTE ELECTRIC COMPANY ASSUMES NO RESPONSIBILITY FOR INJURY OR DAMAGE ARISING FROM THE USE OF THIS SPECIFICATION DIAGRAM.

OUTDOOR SERVICE 400 TO 800 AMPS

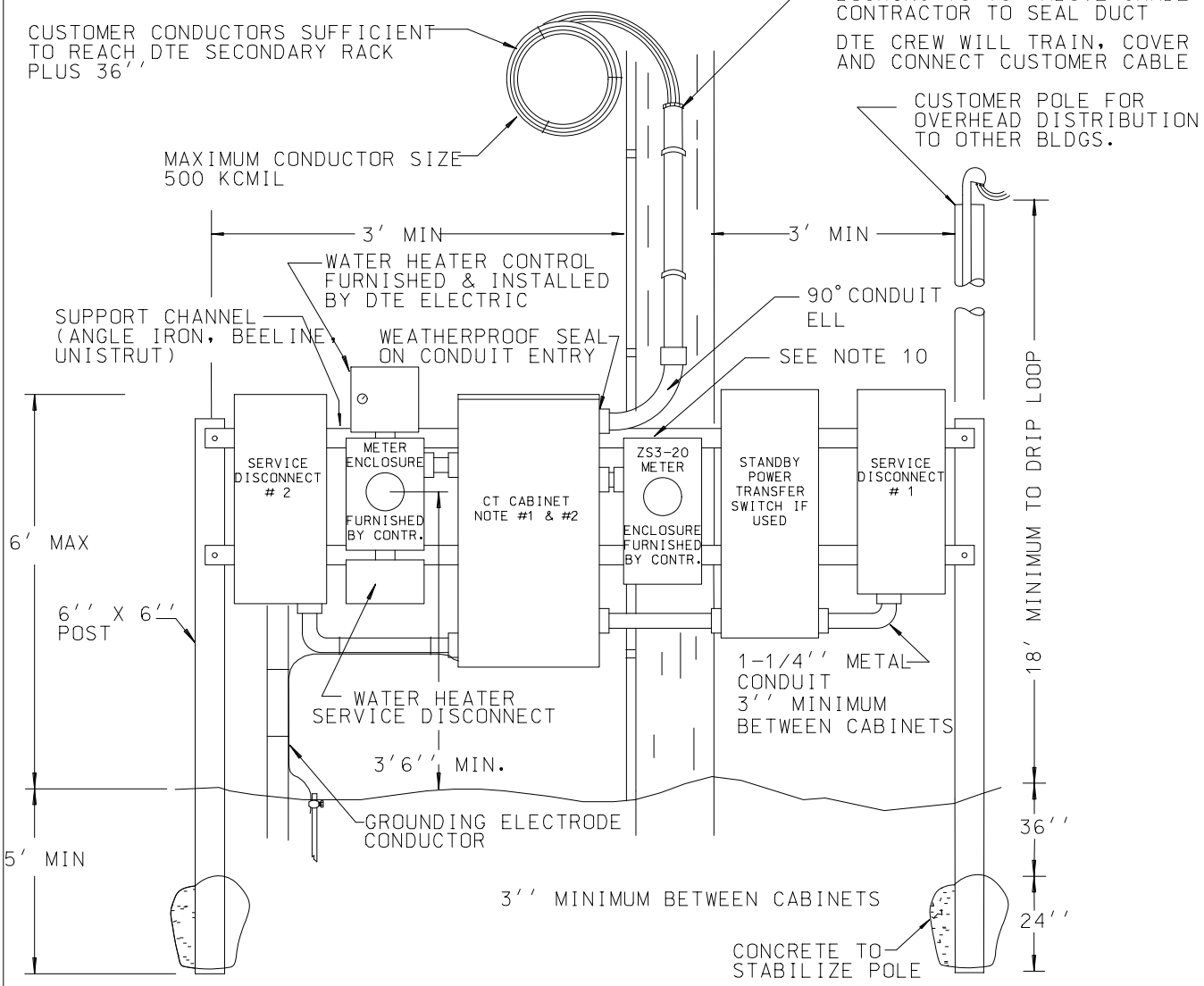

NOTES:

1. NO LINE OR LOAD CONDUCTORS THRU CENTER OF CT MOUNTING AREA.
2. IF 3ϕ 120/240V, POWER LEG ON CENTER BUS, 1ϕ USE RIGHT AND LEFT BUSES.
3. SERVICE EQUIPMENT OTHER THAN METER BOX IS MAINTAINED BY CUSTOMER.
4. METER BOX MUST BE INSTALLED 42'' MINIMUM HEIGHT TO CENTER OF METER FACE FROM GRADE AND 6' MAXIMUM TO TOP OF METER BOX.
5. SERVICE DISCONNECT AND RACEWAYS MUST BE RAINTIGHT. THE DISCONNECT IS SIZED, FURNISHED AND INSTALLED BY CUSTOMER.
6. A GROUND ROD MUST BE INSTALLED IN COMPLIANCE WITH N.E.C. ARTICLE 250.
7. SUPPORT CHANNEL OR ANGLES SHOULD BE BOLTED TO POST WITH 1/2'' BOLTS AND WASHERS, 3/8'' U BOLTS OR PIPE HANGER CLAMPS DESIGNED FOR THAT USE.
8. ADDRESS MUST BE PERMANENTLY MARKED ON METER ENCLOSURE. USE PERMANENT LETTERS OR STICKERS.
9. DTE POLE WILL BE SET ADJACENT TO BACK SIDE OF SUPPORT CHANNELS AND CENTERED IN REAR OF BOARD TO AVOID CUSTOMER'S POLE FALLING IN DTE LINE POLE HOLE DURING INSTALLATION. NO ATTACHMENTS TO POLE WILL BE ALLOWED TO FACILITATE MAINTENANCE AND REPLACEMENT OF THE POLE IN THE FUTURE.
10. ANY BOND BETWEEN THE METER ENCLOSURE AND JOINT USERS THAT INTERFERES WITH REMOVING THE COVER ON THE METER BOX IS A VIOLATION OF NEC 250.94 (3). THE JOINT USER WHO CREATED THE VIOLATION MUST CORRECT THE SITUATION.

DTE ELECTRIC COMPANY ASSUMES NO RESPONSIBILITY FOR INJURY OR DAMAGE ARISING FROM THE USE OF THIS SPECIFICATION DIAGRAM.

FARM SERVICE INSTALLATIONS

1. **Definition.** *Farm Service* is the term applied to a wiring method used on a farm to provide service to the various outlying buildings from a central distribution pole (maypole).

2. **Application and Design.** A farm service is used when the farm buildings are grouped in such a way that service from a centrally located distribution pole provides maximum voltage to each building. In many cases, one of the buildings is the most central point and can serve as the best source of power. DTE Electric recommends that electrical equipment be mounted on a building or support assembly whenever possible to avoid pole replacement problems. *When only small loads are connected in outbuildings and no additional load is planned, farm service is usually not justified since voltage drop is not a factor. In such cases, the barn and other buildings can readily be served with small size wire run overhead or underground from the residence.*

3. **Service Ampacity.** The service should be large enough for present and future connected load. All new services should be a minimum of 200 amperes. Additional capacity can be installed initially for less than the cost of adding or changing the wiring at a later date. Therefore, it is important for the farmer to plan for possible future loads.

4. **Wiring Methods and Materials.** The particular wiring method and the materials to be used will depend upon a number of factors: The size of the load to be served, the size of the farm, possibility of future load growth, location of farm buildings, and whether the wiring is to be overhead or underground.

   (a) Overhead Wiring. To provide a well-planned overhead distribution system, a layout should be selected that will cover all of the farmer's electrical requirements.

   (b) Underground Wiring. Farmers wishing to avoid overhead conflicts or clearance problems may want underground distribution to the individual loads.

5. **Standby Generator Connection.** When a standby generator connection is desired on a farm maypole installation, a double-throw weatherproof switch must be used as shown on page 4-12-1.

6. **Replacement of Farm Maypoles.** When it becomes necessary to replace a farm service pole, the customer will be responsible for transferring the customer-owned equipment to a support assembly at that time (see 4-11-3). The DTE Electric Planner will coordinate the work of the customer's contractor and the DTE Electric crew.

WIRING SPECIFICATION FOR FARM SERVICE INSTALLATIONS

1. **Scope.**

   (a) This specification covers the method used for the installation of service, meter equipment, and wiring for a farm service.

   (b) All material and workmanship must comply with DTE Electric specifications.

2. **Mounting Outdoor Metering Equipment.** The outdoor metering equipment shall be securely fastened to a support assembly. Attaching parts for mounting this equipment will be furnished and installed by the customer.

3. **Connections to Outdoor Metering Equipment.** Service and load connections shall be installed in accordance with established practice for the type of equipment used.

4. **Disconnecting Equipment.** A properly grounded, weatherproof dead front service disconnect, circuit breaker, or double-throw switch is required on all new installations.

5. **Water Heater Wiring.** For water heater installation guidelines, see pages 7-23-1, 7-24-3, and 7-24-4. When a water heater is to be supplied by the emergency generator, refer to page 4-12-1 for wiring specifications.

6. **Equipment Installation.**

   (a) The contractor shall install outdoor metering equipment, cable, conduit, disconnecting equipment, etc., in an approved manner.

   (b) Bolts, screws, nails, and straps used to attach equipment shall be galvanized steel or other non-corroding metal.

   (c) Equipment must meet minimum requirements for clearance above grade and provide adequate access to any nearby DTE Electric poles.

   (d) Customer's overhead load wires may not be attached to any DTE Electric pole supporting a transformer or primary wires.

OUTDOOR FARM SERVICE
METER EQUIPMENT NEXT TO LINE POLE

3-WIRE SINGLE PHASE 120/240 VOLT
4-WIRE THREE PHASE 120/240 VOLT
3/0 & 350kcmil SERVICES
ONLY UNDERGROUND CONDUCTORS TO LOAD ARE PERMITTED
FROM THIS TYPE OF INSTALLATION

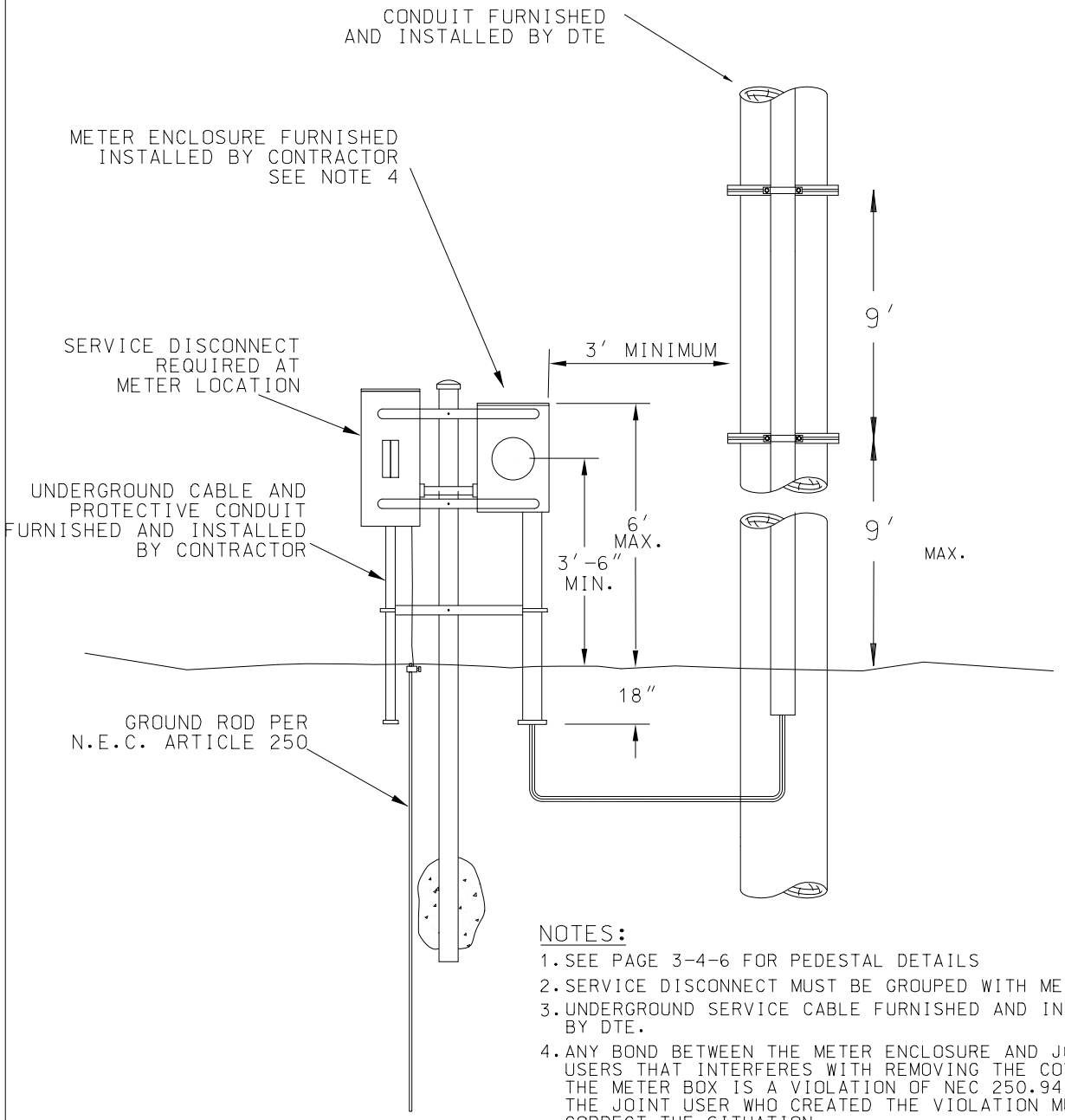

NOTES:

1. SEE PAGE 3-4-6 FOR PEDESTAL DETAILS
2. SERVICE DISCONNECT MUST BE GROUPED WITH METER.
3. UNDERGROUND SERVICE CABLE FURNISHED AND INSTALLED BY DTE.
4. ANY BOND BETWEEN THE METER ENCLOSURE AND JOINT USERS THAT INTERFERES WITH REMOVING THE COVER ON THE METER BOX IS A VIOLATION OF NEC 250.94 (3). THE JOINT USER WHO CREATED THE VIOLATION MUST CORRECT THE SITUATION.

DTE ELECTRIC COMPANY ASSUMES NO RESPONSIBILITY FOR INJURY
OR DAMAGE ARISING FROM THE USE OF THIS SPECIFICATION DIAGRAM.

OUTDOOR FARM SERVICE
400 TO 800 AMPS

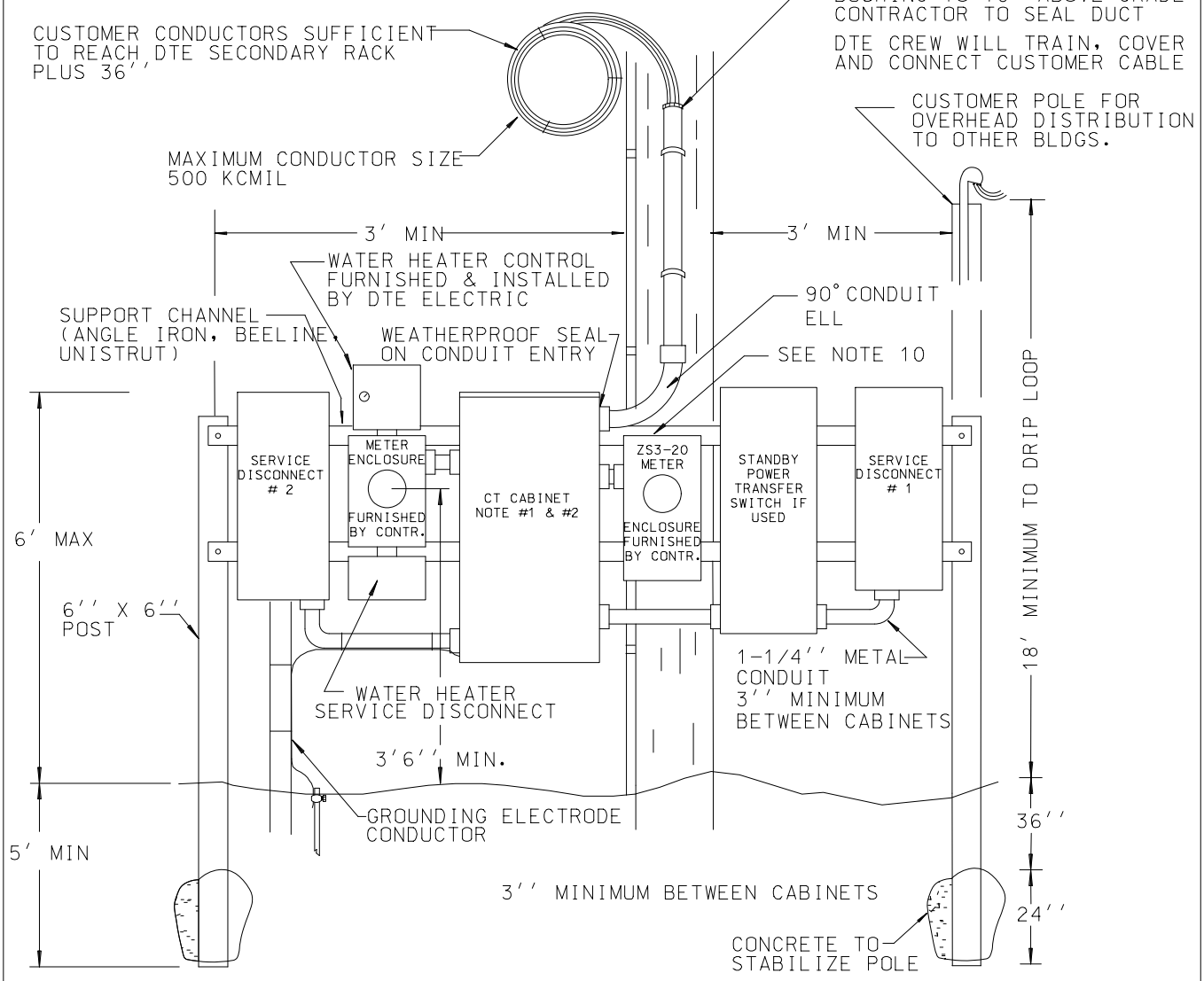

NOTES:

1. NO LINE OR LOAD CONDUCTORS THRU CENTER OF CT MOUNTING AREA.
2. IF 3ϕ 120/240V, POWER LEG ON CENTER BUS, 1ϕ USE RIGHT AND LEFT BUSES.
3. SERVICE EQUIPMENT OTHER THAN METER BOX IS MAINTAINED BY CUSTOMER.
4. METER BOX MUST BE INSTALLED 42'' MINIMUM HEIGHT TO CENTER OF METER FACE FROM GRADE AND 6' MAXIMUM TO TOP OF METER BOX.
5. SERVICE DISCONNECT AND RACEWAYS MUST BE RAINTIGHT. THE DISCONNECT IS SIZED, FURNISHED AND INSTALLED BY CUSTOMER.
6. A GROUND ROD MUST BE INSTALLED IN COMPLIANCE WITH N.E.C. ARTICLE 250.
7. SUPPORT CHANNEL OR ANGLES SHOULD BE BOLTED TO POST WITH 1/2'' BOLTS AND WASHERS, 3/8'' U BOLTS OR PIPE HANGER CLAMPS DESIGNED FOR THAT USE.
8. ADDRESS MUST BE PERMANENTLY MARKED ON METER ENCLOSURE. USE PERMANENT LETTERS OR STICKERS.
9. DTE POLE WILL BE SET ADJACENT TO BACK SIDE OF SUPPORT CHANNELS AND CENTERED IN REAR OF BOARD TO AVOID CUSTOMER'S POLE FALLING IN DTE LINE POLE HOLE DURING INSTALLATION. NO ATTACHMENTS TO POLE WILL BE ALLOWED TO FACILITATE MAINTENANCE AND REPLACEMENT OF THE POLE IN THE FUTURE.
10. ANY BOND BETWEEN THE METER ENCLOSURE AND JOINT USERS THAT INTERFERES WITH REMOVING THE COVER ON THE METER BOX IS A VIOLATION OF NEC 250.94 (3). THE JOINT USER WHO CREATED THE VIOLATION MUST CORRECT THE SITUATION.

DTE ELECTRIC COMPANY ASSUMES NO RESPONSIBILITY FOR INJURY OR DAMAGE ARISING FROM THE USE OF THIS SPECIFICATION DIAGRAM.

STAND-BY ELECTRIC GENERATOR CONNECTIONS

THE USE OF STAND-BY ELECTRIC GENERATORS INTRODUCES CERTAIN HAZARDS. IF NOT CORRECTLY CONNECTED, A STAND-BY GENERATOR CAN FEED POWER TO DTE LINES. THIS POWER MAY CAUSE PERSONAL INJURY OR EQUIPMENT DAMAGE TO ALL CUSTOMERS SERVED BY THE DTE LINES INVOLVED. TO ELIMINATE THESE HAZARDS, THE GENERATOR MUST BE ISOLATED FROM THE DTE SERVICE LINES. A DOUBLE-THROW SWITCH MUST BE INSTALLED. SEE N.E.C. ARTICLE 702-5 (2014).

LEGEND

N - 0 VOLTS TO GROUND
L - 120 VOLTS TO GROUND
P - 208 VOLTS TO GROUND

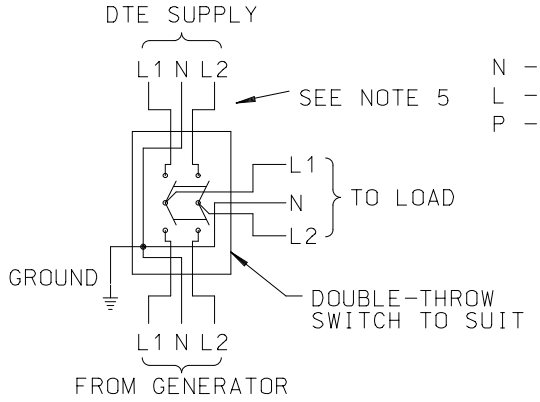

10 3 WIRE
120/240 VOLT A.C.

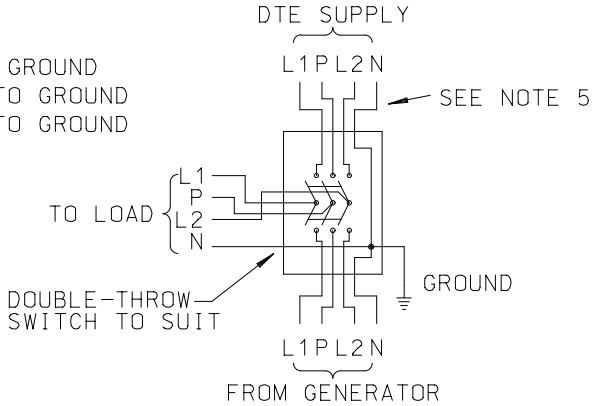

30 4 WIRE
120/240 VOLT A.C.

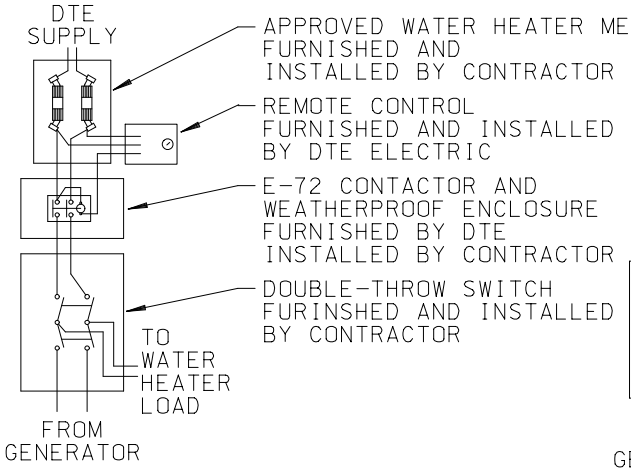

*FROM 7.1 KW THRU 16.5 KW

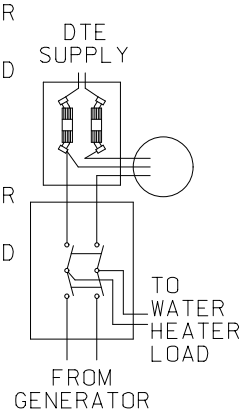

*UP TO AND INCLUDING 7 KW

WATER HEATER LOADS

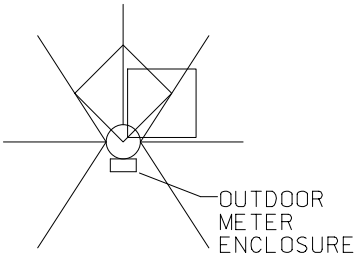

CLIMBING SPACE

ALL EQUIPMENT ON POLE SHALL BE CONSTRUCTED AND MAINTAINED TO PROVIDE AN UNOBSTRUCTED VERTICAL CLIMBING SPACE, THE HORIZONTAL DIMENSIONS OF WHICH SHALL BE NOT LESS THAN 30 INCHES SQUARE. IT MAY BE ON ONE SIDE OR QUADRANT OF THE POLE AND PREFERABLY SHOULD BE CONTINUOUS BEYOND THE POLE TOP.

NOTES:

*1. A DOUBLE-THROW SWITCH MUST BREAK THE DTE ELECTRIC SUPPLY BEFORE CLOSING TO THE STAND-BY GENERATOR. IF LOCATED OUTDOORS, IT NEED NOT BE FUSIBLE BUT IT MUST BE WEATHERPROOF. A POLE TOP SWITCH IS NOT ACCEPTABLE.

2. SWITCH SIZE WILL BE DETERMINED BY AMPERE CAPACITY OF THE LARGEST CONDUCTOR TO BE CONNECTED. SWITCH MAY CONTROL THE ENTIRE LOAD OR ANY PORTION THEREOF. THE PORTION CONTROLLED WILL BE DETERMINED BY THE LOCATION OF SWITCH, SIZE AND IMPORTANCE OF LOAD AND CAPACITY OF STAND-BY GENERATOR.

3. IF THE SWITCH IS LOCATED AT THE MAYPOLE, ADEQUATE ARRANGEMENTS FOR SPACE AND SUPPORT MUST BE MADE. USE A STUB POLE AND CROSS BARS. (SEE PAGES 4-11-2 AND 4-11-5.)

4. A 3 PHASE GENERATOR MAY HAVE A VERY LIMITED CAPACITY FOR SINGLE PHASE LOADS, SUCH AS LIGHTING AND ELECTRIC HEATING EQUIPMENT. CONSULT MANUFACTURER OF THE GENERATOR FOR LIMITATIONS.

5. METER ENCLOSURES TO BE INSTALLED BEFORE THE DOUBLE-THROW SWITCH.

DTE ELECTRIC COMPANY ASSUMES NO RESPONSIBILITY FOR INJURY OR DAMAGE ARISING FROM THE USE OF THIS SPECIFICATION DIAGRAM.

TYPICAL SECONDARY AUTOMATIC THROWOVER SCHEME

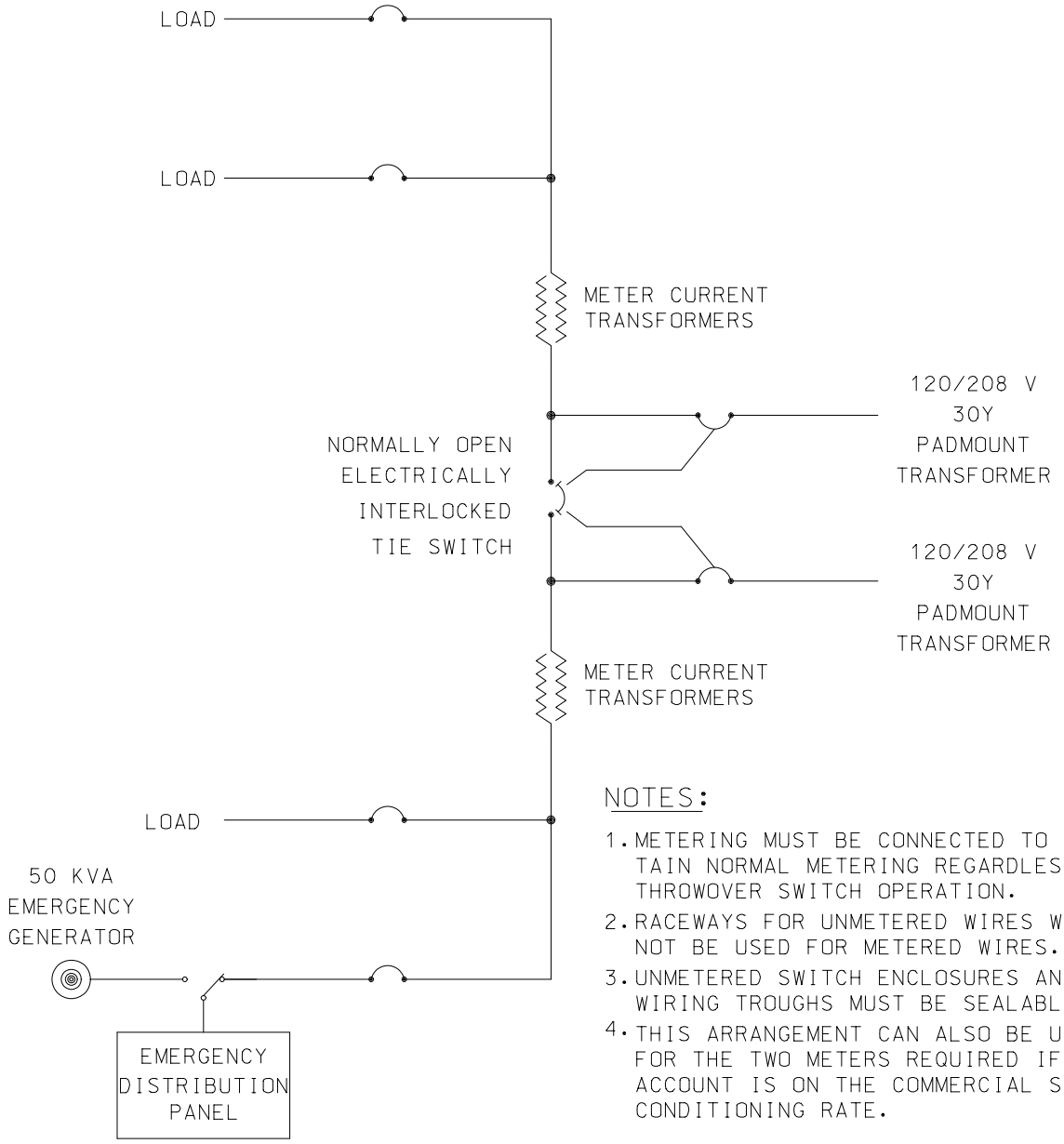

NOTES:

1. METERING MUST BE CONNECTED TO MAINTAIN NORMAL METERING REGARDLESS OF THROWOVER SWITCH OPERATION.
2. RACEWAYS FOR UNMETERED WIRES WILL NOT BE USED FOR METERED WIRES.
3. UNMETERED SWITCH ENCLOSURES AND WIRING TROUGHS MUST BE SEALABLE.
4. THIS ARRANGEMENT CAN ALSO BE USED FOR THE TWO METERS REQUIRED IF THE ACCOUNT IS ON THE COMMERCIAL SPACE CONDITIONING RATE.

PRIMARY FEED TO THE TRANSFORMERS WILL BE FROM ALTERNATE SOURCES. FAILURE OF ONE FEED WILL OPERATE THE AUTOMATIC THROWOVER CONTROL TO FIRST OPEN THE FAILED FEED AND THEN CLOSE THE TIE SWITCH. IF BOTH FEEDS HAVE FAILED, THE AUTOMATIC THROWOVER CONTROL, AFTER A DELAY, WILL START THE GENERATOR AND THROW OVER THE EMERGENCY PANEL FEED. ANY OPERATION WILL TRIP A SIGNAL, USUALLY A LIGHT, SOMETIMES WITH AN AUDIO SIGNAL. CONTROL MUST BE MANUALLY RESET.

DTE ELECTRIC COMPANY ASSUMES NO RESPONSIBILITY FOR INJURY OR DAMAGE ARISING FROM THE USE OF THIS SPECIFICATION DIAGRAM.

Section 4 SIM-ESIG
Sequence List

Section 4 SIM-ESIG	Year	Revision Description
		Changed company name to DTE Electric Company
04-03-01	Jul-21	Updated 1(a) & 2(a). Added note (e) .
04-03-02	Jul-21	No change
04-04-01	Jul-21	No change
04-04-02	Jul-21	No change
04-04-03	Jul-21	No change
04-04-04	Jul-21	Added color to the conductor tapes.
04-04-05	Jul-21	Moved visually obstructed notes. Underlined subtitle words. Added note 5.
04-04-05.1	Jun-21	Created spec
04-04-06	Jul-21	Edited drawings to make numbers more visible, edited notes on drawing and notes 2 & 8.
04-04-07	Sep-21	Added NEC meter box note
04-04-08	Jul-21	Edited notes B & C
04-04-15	Jul-21	Moved visually obstructed notes.
04-04-16	Jul-21	Changed to Obsolete.
04-04-21	Sep-21	Moved to Reference only
04-04-37	Sep-21	Moved to Reference only
04-04-38	Sep-21	Moved to Reference only
04-04-39	Oct-21	No change
04-04-40	Oct-21	No change
04-04-41	Jul-21	Edited Note 1
04-04-42	Oct-21	No change
04-04-43	Jul-21	Edited Note 1
04-04-44	Oct-21	No change
04-04-45	Jul-21	Edited Note 1
04-04-46	Oct-21	No change
04-04-47	Oct-21	No change
04-04-48	Oct-21	No change
04-04-49	Oct-21	No change
04-04-50	Oct-21	No change
04-07-01	Jul-21	Edited drawing to make measurements more visible.
04-08-01	Jul-21	Added Note on meter placement.
04-08-02	Oct-21	No change
04-09-01	Oct-21	No change
04-09-02	Oct-21	No change
04-10-01	Oct-21	No change
04-11-1	Oct-21	No change
04-11-2	Oct-21	No change
04-11-3	Oct-21	No change
04-11-4	Oct-21	No change
04-12-01	Oct-21	No change
04-12-02	Oct-21	No change
04-13-01	Oct-21	No change
04-13-02	Oct-21	No change