CLICK ANYWHERE on THIS PAGE to RETURN to CHOOSE a START / RUN CAPACITOR, HOW TO at InspectApedia.com

General information

Electrical specifications and definitions

Rated voltage Vn
The rms value of the sinusoidal AC voltage which can be applied to the capacitor in normal working conditions.

Rated current In
The value of the current flowing through the capacitor of rated capacitance at the rated voltage and frequency.

Duty frequency range
The capacitors can be used at a frequency range of 50-60Hz. Use at higher frequencies is possible provided the voltage, current, temperature and power limits are complied with.

Operating temperature class
Minimum temperature –25°C.
Maximum temperature +70°C or +85°C.
In accordance with the reference standards, these temperatures are those measured on the surface of the capacitor.

Storage temperature
–40°... + 85°C

Capacitance tolerance
Rated tolerance ±5%
Different tolerance values are available on request.

Loss angle tanδ
The value of the tangent of the loss factor measured at 50 Hz, 20°C at the rated voltage is:

$\tan\delta \leq 20 \cdot 10^{-4}$

Maximum permissible overloads
The capacitors can operate in the following overload conditions throughout the temperature class range:

I max = 1.3 In
V max = 1.1 Vn
The overload deriving from the simultaneous presence of voltage and current above the rated values, even if within the stated limits, must be such that the apparent power Pa (Irms x Vrms) absorbed by the capacitor is:

$Pa \leq 1.35 \cdot 2\pi\, f \cdot C \cdot Vn^2$

Pulsed stress
The capacitors are capable of withstanding steep wavefronts with a maximum voltage variation speed of 20 V / μs.

Insulation resistance between terminals and case
Measured at 500 Vdc, 20°C after 30 seconds.

Ri > 1000 Mohm

Direct current operation
These capacitors can be used with a DC voltage not exceeding the peak value of the rated voltage.

$Vdc \leq \sqrt{2}\, Vn$
Capacitors for higher DC voltages are available on request.

Part number composition

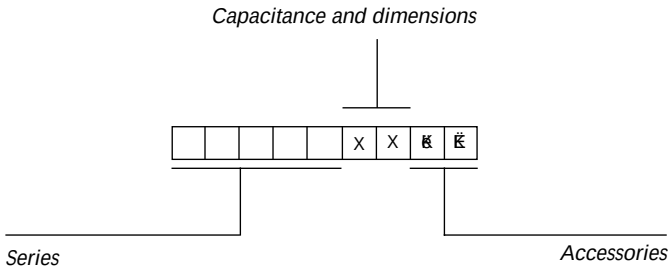

Mechanical specifications

Mounting:
The capacitors may be provided with stud M8 and M12 for mounting:

The maximum torque is: 5 Nm for M8
12 Nm for M12

Vibrations:
In accordance with IEC 68-2-6 standards, the capacitors pass the test with a frequency range from 10 to 55 Hz, acceleration amplitude 10 g and duration 6 h.

Typical performance of electrical characteristics of metallized polypropylene film vs. temperature

Dissipation factor

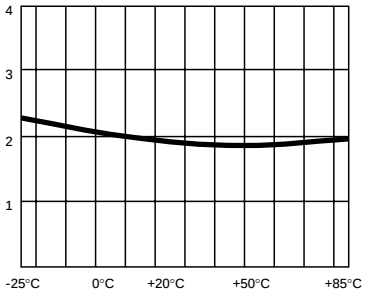

Dielectric constant

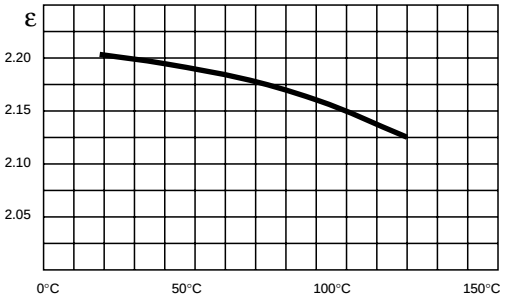

Insulation resistance

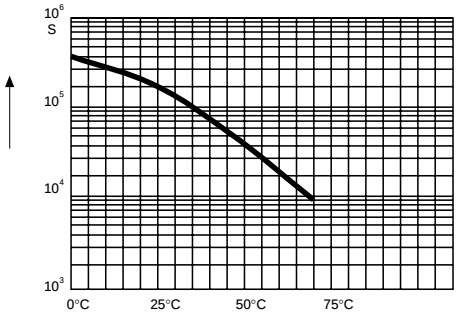

Protection degrees according to IEC publication 529 (IPXY)

1st code letter X	*Protection degree*
0	*Not protected*
1	*Protected against solid objects greater than 50 mm*
2	*Protected against solid objects greater than 12 mm*
3	*Protected against solid objects greater than 2.5 mm*
4	*Protected against solid objects greater than 1.0 mm*
5	*Dust-protected*
2nd code letter Y	*Protection degree*
0	*Not protected*
1	*Protected against dripping water*
2	*Protected against dripping water when tilted up to 15°*
3	*Protected against spraying water*
4	*Protected against splashing water*
5	*Protected against water jets*

Operating classes (DIN 40040)

According to DIN 40040 (ed. Feb. 1973), operating classes are identified by 5 letters which are defined consecutiely: lower temperature, upper temperature, relative humidity, expected life, failure rate.

1 2 3 4 5 *1st letter*	*Temperature lower limit* (ºC)
F	—55
G	—40
H	—25
J	—10

1 2 3 4 5 *2nd letter*	*Temperature upper limit* (ºC)
M	+100
P	+85
S	+70
U	+60

1 2 3 4 5 *3rd letter*	***Relative humidity (%)***		*Acceptable condensation*
	Maximum value	*Year average*	
F (1)	95 (2)	≤75	no

1 2 3 4 5 *4th and 5th letter*	*Expected life (3)* (ore/*hours)*	*Failure % max*
QV	1.000	3
PU	3.000	
NT	10.000	
MS	30.000	

(1) *Room temperature = 35° C;*

(2) *For 30 days/year max; then max RH = 85%;*

(3) *On rated service and at upper temperature limit.*

Operating classes and climatic categories IEC/EN 60252

Operating classes of capacitors for single phase motors are identified as follows:

a) Life expectancy

	30.000 h class A	*10.000 h class B*	*3.000 h class C*	*1.000 h class D*
failure % max	*3%*	*3%*	*3%*	*3%*

b) Climatic category

25	/	*85*	/	*21*
min. permissible temperature		*max. permissible temperature*		*damp heat days*

c) Class of safety protection

P0	*No safety protection*
P1	*Safety achievable by external means (fuse)*
P2	*With internal safety protect*

QUALITY

The great attention to the product quality and to the customer service are constants and these are main factors which contribute to its success all over the world.

The capacitor division, as described in Quality Manual, has been one of the first in Italy to be approved by CSQ according to ISO 9001

All is garanted thanks to fully automated and integrated processes, to completely new and innovative machines and technologies, to methodologies of the productive processes control based on accurate specifications and on responsible operator.
The averent series are certified according to the new European EN 60252 standard.

Warning!

Misapplication, such as exceeding the design limits, use for applications different from those indicated in the catalogue or use for applications inappropriate for the characteristics of the type of capacitor used, may result in failure of the capacitor or in expulsion of the capacitor element from the case. Normal end of life failure is characterized by loss of capacitance increase in dissipation factor and/or permanent open circuit. The user is therefore cautioned to provide whatever additional protection or enclosure is necessary to avoid possible damage or injury in case of failure.

Metallized polypropylene film capacitors in plastic case series 4.16.18/.10/.17/.15

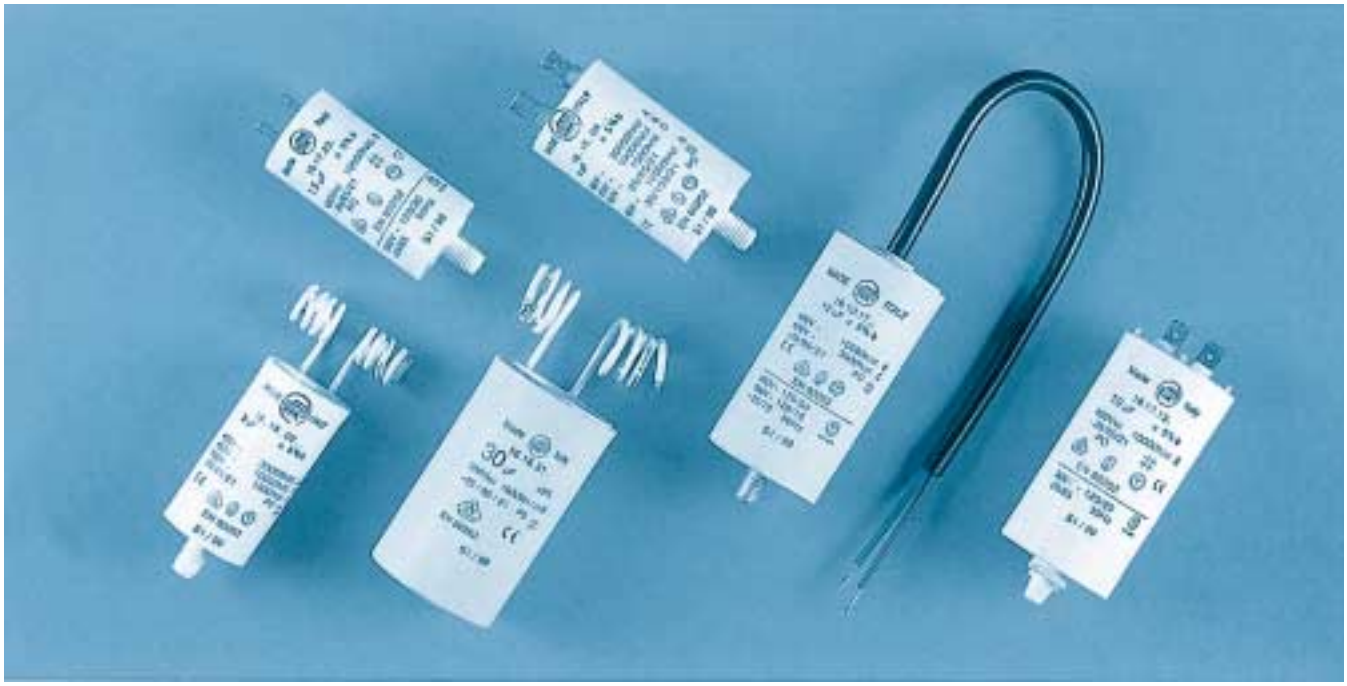

The dielectric is polypropylene film, the electrodes consist of an extremely thin metal coating obtained by vacuum evaporation. Case and cover are made with self-extinguishing plastic material, the capacitive element is sealed with polyurethanic resin.
The main characteristics of these capacitors are:

- *Low losses non-inductive winding*
- *Self-healing property avoiding short circuits*
- *Small size and limited weight*
- *No leakage risk.*
- *Class of safety protection: P0*

Series 4.16.18	*Approvals*	
	EN 60252 VDE IMQ ASE	
	Voltage 250 V ~	10000 h cl.B 25/85/21 — *Approved range* 1 ÷ 70 µF
C (µF)	DxH (mm)	*Part number* 4.16.18.XX.KK
1	25x50	4.16.18.01.KK
1,5	"	.02.
2	"	.03.
2,5	"	.04.
3	"	.05.
3,15	"	.06.
3,5	"	.07.
4	"	.08.
4,5	"	.09.
5	25x55	.10.
6	"	.11.
6,3	30x55	.12.
7	"	.13.
7,5	"	.14.
8	"	.15.
9	"	.16.
10	"	.17.
11	"	.18.
12	36x58	.19.
12,5	"	.20.
13	"	.21.
13,5	"	.22.
14	"	.23.
15	"	.24.
16	"	.25.
17,5	36x70	.26.
18	"	.27.
20	"	.28.
22	"	.29.
25	40x70	.30.
30	"	.31.
31,5	40x92	.32.
35	"	.33.
40	"	.34.
45	"	.35.
50	45x92	.36.
55	"	.37.
60	45x117	.38.
70	"	.39.
80	"	.40.
90	50x117	.41.
100	"	.42.
c UL us	**UL** recognition File E192559 **250V~**	*Available on request*

Series 4.16.10	Approvals					
	EN 60252	VDE	IMQ	ASE		
	Voltage				*Approved range*	
	400 V ~	10000 h	cl.B	25/85/21	45 ÷ 60 µF	
	425 V ~	10000 h	cl.B	25/85/21	2 ÷ 40 µF	
	450 V ~	3000 h	cl.C	25/85/21	45 ÷ 60 µF	
	475 V ~	3000 h	cl.C	25/85/21	2 ÷ 40 µF	
	500 V ~	1000 h	cl.D	SI120/20	2 ÷ 60 µF	
C (µF)	DxH (mm)	*Part number* 4.16.10.XX.KK	DxH** (mm)	*Part number* 4.16.10.XX.KK	DxH** (mm)	*Part number* 4.16.10.XX.KK
2	25x49	4.16.10.31.KK	28x55	4.16.10.01.KK	30x56	4.16.10.73.KK
2,5	25x49	.32.	28x55	.02.		
3	25x49	.33.	28x55	.03.	30x56	.74.
3,15	25x49	.34.	28x55	.04.		
3,5	25x55	.35.	28x55	.05.		
4	25x55	.37.	28x55	.06.	30x56	.38.
4,5	30x56	.39.	28x55	.07.		
5	30x56	.76.	28x55	.08.		
5,5	30x56	.41.				
6	30x56	.82.	32x55	.09.		
6,3	30x56	.83.	32x55	.10.		
7	30x56	.85.	32x55	.12.		
7,5	36x58	.44.	32x55	.89.		
8	36x58	.81.	32x55	.13.	30x70	.52.
9	36x58	.14.				
10	36x58	.15.	30x70	.47.		
11	36x58	.16.				
12	36x70	.17.				
12,5	36x70	.18.				
13	36x70	.19.				
14	36x70	.21.				
15	36x70	.22.				
16	40x70	.23.				
18	40x70	.24.				
20	40x70	.25.				
22	40x92	.68.				
25	40x92	.26.				
30	40x92	.70.				
31,5	45x92	.27.				
32	45x92	.72.				
35	45x92	.28.				
36	45x92	.65.				
40	45x92	.29.				
45	45x117	.63.				
50	45x117	.30.				
55	45x117	.64.				
60	50x117	.61.				
70	50x117	.67.				
80	55x120	.87.				

UL recognition
File E192559
330V~/450V~ *Available on request*

*** Alternative dimensions*

Series 4.16.17

Series 4.16.17	Approvals
	EN 60252 VDE IMQ ASE

Voltage				*Approved range*
400 V~	30000 h	cl.A	25/85/21	1 ÷ 45 µF
425 V~	30000 h	cl.A	25/85/21	1 ÷ 45 µF
450 V~	10000 h	cl.B	25/85/21	1 ÷ 45 µF
475 V~	10000 h	cl.B	25/85/21	1 ÷ 70 µF
500 V~	3000 h	cl.C	25/85/21	1 ÷ 25 µF

C (µF)	DxH (mm)	*Part number* 4.16.17.XX.KK	DxH (mm)	*Part number* 4.16.17.XX.KK
1	25x49	4.16.17.71.KK	28x55	4.16.17.01.KK
1,5	25x49	.73.	28x55	.23.
2	25x49	.74.	28x55	.02.
2,5	25x55	.75.	28x55	.03.
3	25x55	.77.	28x55	.04.
3,15			28x55	.05.
3,5			28x55	.06.
4	30x56	.81.	28x55	.07.
4,5	30x56	.82.		
5	30x56	.83.	32x55	.08.
6	36x58	.99.	32x55	.09.
6,3	36x58	.93.	32x55	.10.
7	36x58	.11.		
7,5	36x58	.97.		
8	36x58	.12.		
9	36x70	.24.		
10	36x70	.13.		
12	40x70	.29.		
12,5	40x70	.30.		
14	40x70	.15.		
15	40x70	.26.		
16	40x92	.54.		
17,5	40x92	.59.		
18	40x92	.17.		
20	40x92	.18.		
22	40x92	.19.		
25	45x92	.25.		
30	45x92	.21.		
32	50x92	.22.		
35	50x92	.57.		
40	45x117	.27.		
50	50x117	.28.		
60	55x120	.56.		
70	60x120	.62.		

c UL us **UL** recognition
File E192559
370V~/450V~

Available on request

Series 4.16.15

Series 4.16.15	Approvals			
	EN 60252 VDE IMQ ASE			
	Voltage			*Approved range*
	400 V ~	10000 h cl.B	25/100/21	0.5 ÷ 7,5µF
	425 V ~	30000 h cl.A	25/85/21	0,5 ÷ 40 µF
	475 V ~	10000 h cl.B	25/85/21	0.5 ÷ 40 µF
	500 V ~	3000 h cl.C	25/85/21	0.5 ÷ 40 µF

C (µF)	DxH (mm)	*Part number* 416.15.XX.KK	DxH** (mm)	*Part number* 416.15.XX.KK
0,8	25x49	4.16.15.47.KK	28x55	4.16.15.30.KK
1	25x49	.48.	28x55	.69.
1,5	25x49	.50.	28x55	.67.
2	25x55	.84.	28x55	.01.
2,5	25x55	.85.	28x55	.28.
3	30x56	.53.	28x55	.02.
3,15	30x56	.54.	28x55	.66.
3,5	30x56	.87.	32x55	.03.
4	30x56	.88.	32x55	.04.
4,5			32x55	.05.
5	36x58	.06.	30x70	.98.
6	36x70	.07.	30x70	.41.
6,3	36x70	.29.		
7	36x70	.08.		
7,5	36x70	.09.		
8	40x70	.10.		
9	40x70	.11.		
10	40x70	.12.		
11	40x70	.13.		
12	40x92	.14.		
12,5	40x92	.15.		
13	40x92	.16.		
14	40x92	.17.		
15	40x92	.18.		
16	40x92	.19.		
17,5	40x92	.20.		
18	45x92	.21.		
20	45x92	.22.		
22	45x92	.65.		
25	45x117	.23.		
30	45x117	.24.		
31,5	45x117	.27.		
35	50x117	.25.		
40	50x117	.26.		
45	55x120	.74.		
50	55x120	.90.		
55	60x120	.94.		
60	60x120	.36.		

c UL us **UL** recognition
File E192559
400V~/500V~

Available on request

** *Alternative dimensions*

Mechanical configuration

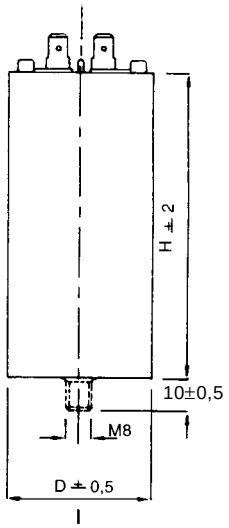

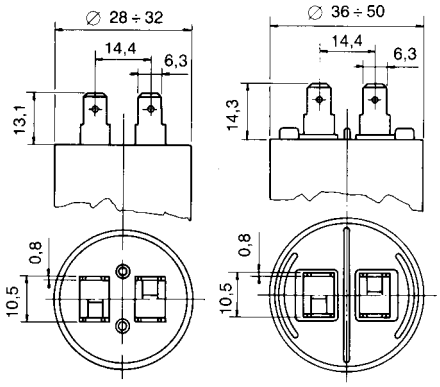

Fig. 1 *Double tags 6.35 x 0.8 mm*

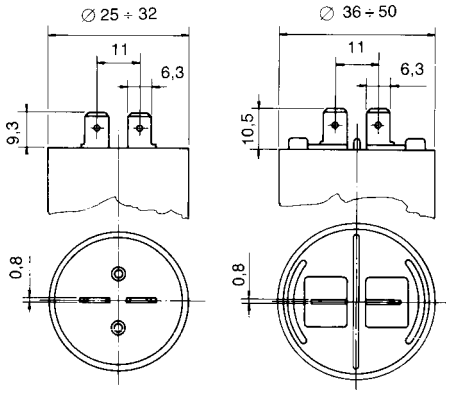

Fig. 2 *Single tag 6.3 x 0.8 mm*

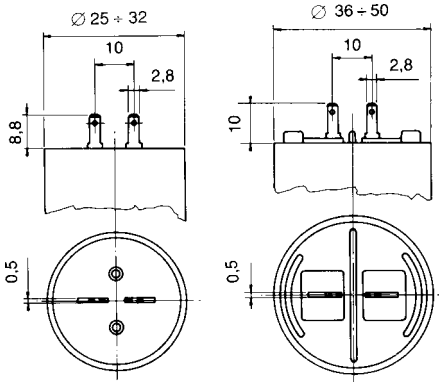

Fig. 3 *Tags 2.8 x 0.5 mm*

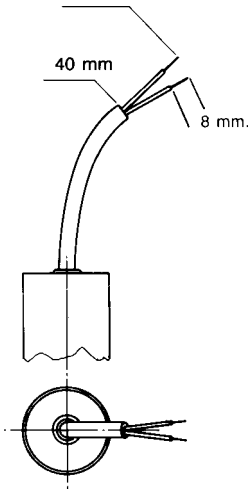

Fig. 4 *Twin cable L = 250 mm*

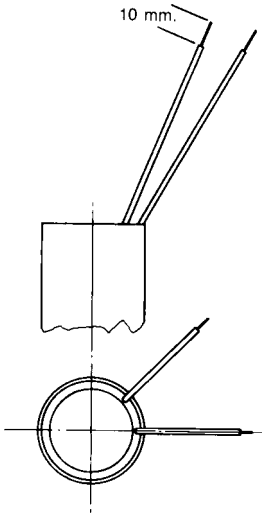

Fig. 5 *Insulated solid core leads 0.5 mm² L = 150 mm*

Accessories kk *

Fig.	Description		Series 4.16.18/.10/.17/.15 without stud	with stud	fast fix
1	*Terminals*	6,3 mm *double tag*	60	64	71
2	*Terminals*	6,3 mm *single tag*	26	27	72
3	*Terminals*	2,8 mm *plug-in*	00	40	
4	*twin cable L = 250 mm*		10	14	
5	*unipolar leads L = 150 mm*		06	46	
Ø 28 e 32 *Plastic stud M8*					
Ø 25, 30, 36 ÷ 60 *Metallic stud M8*					

**** For UL recognized capacitors, different KK.***

TECHNICAL CHARACTERISTIC

Capacitance tolerance	*: ± 5%*
Working frequency range	*: 50 ÷ 60 Hz*
Individual test voltage	*: Between terminals: 2.15 Vn for 2 sec.; between terminals and case: 3KV for 2 sec.*
Dissipation factor tan δ	*: <20 10^{-4}@ 20°C V=Vn, 50Hz*
Protection	*Case and cover in self - extinguishing plastic material, grade V2 according to UL 94*
Terminals	*: Faston «terminals» 6.3 mm single, double, 2.8 mm plug-in, twin cable, unipolar leads*
Protection degree	*: with terminals: IP00; with twin cable IP55.*
Cover	*: Ball pressure test (IEC 309-1): 125°C Glow wire test (IEC 695-2-1): 850°C Tracking resistance (IEC 309-1): ≥ 250V*
Threaded fixing bolt	*: Max torque: 5 N m*

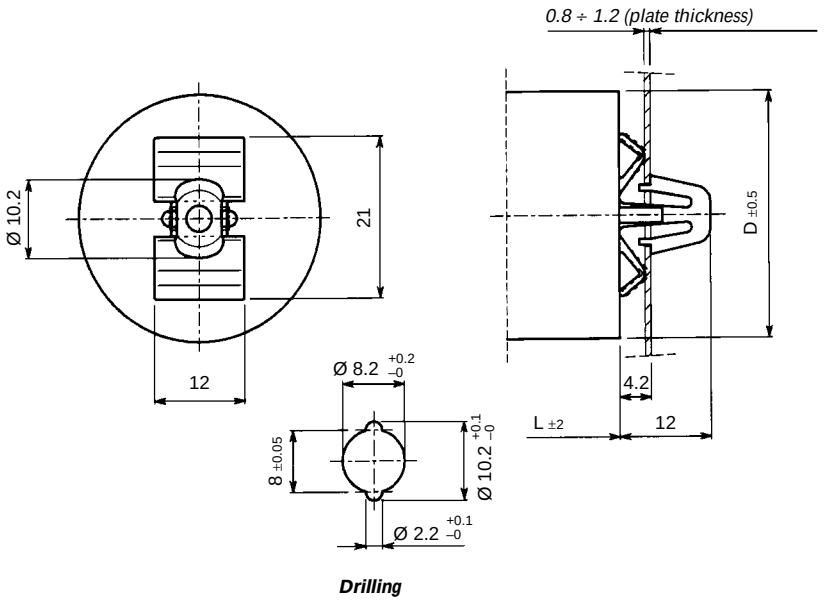

Fig. 6 *Fast fix for dia 28, 32, 36, 40 only.*

"FAST FIX" mounting system

The "FAST FIX" system (patent No UD 92A000164 registration date 3/11/1992) allows a quick mounting of the capacitors on the equipment and it is suitable for plates which tickness is between 0.8 and 1.2 mm.
The required drilling allows, anyway, the alternative standard mounting by means thread stud.

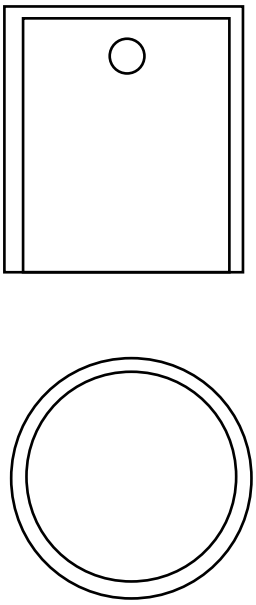

Fig. 7 *Protective cap.*

Ø D	H	Ø d	*P/n*
28	50	8.5	316.23.0930
32	50	8.5	316.23.0940
36	50	8.5	316.23.0950
40	50	8.5	316.23.0960
45	50	8.5	316.23.0860

Metallized polypropylene film capacitors in metallic case series 4.16.27/.25/.33/.26

The dielectric is polypropylene film, the electrodes consist of an extremely thin metal coating obtained by vacuum evaporation.
The capacitor has no risks of leakage.
The cases are metallic, the covers are in self extinguishing plastic (class V2 to UL-94 standards).
The capacitor is sealed by an edging of the case on the cover, ensuring air-tight closure.
The use of an-insulating container between the capacitive element and the metal case, combined with the blocking of the capacitive element in resin, make the capacitor extremely safe both from the electric point of view (earthing insulation) and in terms of resistance to vibrations.
Series 16.25/.26/.27 capacitors are equipped with a safety device in accordance with VDE 0560-8/A1 and UL 810 standard. (Fig. 6).
The capacitors are certified according to CSA 22.2 N. 190-M1985.

- *Class of safety protection: P2*

Series 4.16.27	Approvals				
	EN 60252		ASE		File E102953
	Voltage 330V~	10000h cl. B	25/85/21	*Approved range* 2 ÷ 60uF	*Voltage* 240V~ 60Hz 4÷100uF 10.000 AFC –25 +70°C
	Class of safety protection: P2				

C (µF)	DxH (mm)	*Part number* 416.27.XX.KK	DxH (mm)	*Part number* 416.27.XX.KK
2	25x60	4.16.27.33.KK		
2,5	25x60	.34.		
3	25x60	.35.		
3,15	25x60	.36.		
3,5	25x60	.37.		
4	25x60	.38	35x60	416.27.01.KK.
4,5	25x60	.39.		
5	30x60	.40.	35x60	.02.
6	30x60	.41.	35x60	.03.
6,3	30x60	.42.	35x60	.04.
7	30x60	.43.	35x60	.05.
7,5	30x60	.60.	35x60	.06.
8	30x60	.44.	35x60	.07.
9	35x60	.45.		
10	35x60	.08.		
12	35x60	.32.		
12,5	35x60	.09.		
13	35x60	.10.		
13,5	35x60	.11.		
14	35x72	.12.		
15	35x72	.13.		
16	35x72	.14.		
18	35x72	.15.		
20	40x72	.16.	35x77	.56.
22	40x72	.17.		
25	40x72	.18.		
30	40x98	.19.		
31,5	40x98	.20.		
35	40x98	.21.		
40	40x98	.22.		
45	45x98	.23.		
50	45x98	.24.		
55	45x122	.25.		
60	45x122	.26.		
65	45x122	.27.		
70	45x122	.28.		
75	50x122	.29.		
80	50x122	.30.		
100	55x122	.31.		
110	55x122	.59.		

Series 4.16.25

Series 4.16.25	Approvals					
	EN 60252		ASE		C US File E102953	
	Voltage			*Approved range*	*Voltage*	
	425V~	10000h cl. B	25/85/21	1 ÷ 35uF		
	400V~	10000h cl. B	25/85/21	1 ÷ 60uF	370V~	
	450V~	3000h cl. C	25/85/21	40 ÷ 60uF	60Hz 4÷70uF	
	475V~	3000h cl. C	25/85/21	1 ÷ 35uF	10.000 AFC	
	500V~	1000h cl. D	25/85/21 120/10	1 ÷ 25uF	–25 +70°C	
	Class of safety protection: P2					

C (µF)	DxH (mm)	*Part number* 4.16.25.XX.KK	DxH (mm)	*Part number* 4.16.25.XX.KK	DxH (mm)	*Part number* 4.16.25.XX.KK
1	25x60	4.16.25.01.KK				
1,5	25x60	.02.	30x60	4.16.25.42.KK.		
2	25x60	.03.	30x60	.41.		
2,5	25x60	.04.	30x60	.43.		
3	25x60	.33.	30x60	.44.		
3,15	30x60	.34.				
4	30x60	.35.	25x72	.62.	35x60	4.16.25.05.KK
4,5	30x60	.36.	25x72	.63.		
5	30x60	.37.	25x72	.64.	35x60	.06.
6	30x60	.38.			35x60	.07.
6,3	35x60	.08.				
7	35x60	.09.				
7,5	35x60	.10.				
8	35x60	.11.	30x72	.40.		
9	35x60	.39.				
10	35x72	.12.				
12	35x72	.72.				
12,5	35x72	.13.				
13	35x72	.14.				
13,5	35x77	.81.	40x72	.15.		
14	35x77	.75.	40x72	.16.		
15	40x72	.17.				
16	40x72	.18.				
17,5	40x72	.83.				
18	40x72	.19.				
20	40x98	.20.				
22	40x98	.21.				
22,5	40x98	.82.				
25	40x98	.22.				
30	40x98	.23.				
31,5	45x98	.24.				
35	45x98	.25.				
40	45x122	.26.	50x98	.85.		
45	45x122	.27.				
50	45x122	.28.				
55	50x122	.29.				
60	50x122	.30.				
65	55x122	.31.				
70	55x122	.32.				

Series 4.16.33

Series 4.16.33	Approvals			
	EN 60252 ASE		File E102953	
	Voltage 425V~ 30000h cl. A 25/85/21 475V~ 10000h cl. B 25/85/21 500V~ 3000h cl. C 25/85/21		*Approved range* 0,8÷70uF	*Voltage* 400V~ 60Hz 0,8÷60uF 10.000 AFC –25 +70°C
	Class of safety protection: P2			
C (µF)	DxH (mm)	*Part number* 416.33.XX.KK	DxH (mm)	*Part number* 416.33.XX.KK
0,8	25x60	4.16.33.01.KK.		
1	25x60	.02.		
1,5	25x60	.03.		
2	25x60	.04.		
2,5	25x60	.05.		
3	30x60	.09	25x72	4.16.33.06.KK.
3,15	30x60	.10	25x72	.07.
3 5	30x60	.11	25x72	.08.
4	30x60	.12.		
4 5	30x60	.13.		
5	30x72	.15	35x60	.17.
6	30x72	.16	35x60	.18.
6,3	35x60	.19.		
7	35x60	.20.		
7,5	35x72	.21		
8	35x72	.22		
9	35x72	.23		
10	35x77	.27	40x72	.28.
12	40x72	.29.		
12,5	40x72	.30.		
13	40x72	.31.		
13,5	40x98	.38.		
14	40x98	.39.		
15	40x98	.40.		
16	40x98	.41.		
17,5	40x98	.42.		
18	40x98	.43.		
20	40x98	.44.		
22	45x98	.45.		
25	45x98	.46.		
30	45x122	.50	50x98	.47.
31,5	45x122	.51	50x98	.48.
35	45x122	.52	50x98	.49.
40	50x122	.53.		
45	50x122	.55.		
50	55x122	.56.		
55	55x122	.57.		
60	55x122	.58.		

Series 4.16.26

Series 4.16.26	Approvals					
	EN 60252		ASE		File E102953	
	Voltage			*Approved range*	*Voltage*	
	425V~	30000h cl. A	25/85/21	30 ÷ 40uF	440V~	
	450V~	30000h cl. A	25/85/21	0,8 ÷ 25uF	60Hz 0,8÷60uF	
	475V~	10000h cl. B	25/85/21	30 ÷ 40uF	10.000 AFC	
	500V~	3000h cl. C	25/85/21	0,8 ÷ 25uF	–25 +70°C	
				30 ÷ 40uF		
	Class of safety protection: P2					

C (µF)	DxH (mm)	*Part number* 4.16.26.XX.KK	DxH (mm)	*Part number* 4.16.26.XX.KK	DxH (mm)	*Part number* 4.16.26.XX.KK
0,8	25x60	4.16.26.29.KK				
1	25x60	.30.			35x60	.71.
1,25	25x60	.58.				
1,5	25x60	.31.	30x60	.72.	35x60	.65.
1,8	25x60	.62.				
2	25x60	.32.	30x60	4.16.26.73.KK	35x60	4.16.26.01.KK.
2,5	30x60	.35.	25x72	.33.	35x60	.60.
3	30x60	.36.	25x72	.34	35x60	.02.
3,15	30x60	.42.			35x60	.70.
3,5	30x72	.37.			35x60	.03.
4	30x72	.38.			35x60	.04.
4,5	30x72	.39.			35x60	.40.
5	35x60	.05.	30x77	.61.		
6	35x72	.06.				
6,3	35x72	.66.				
7	35x72	.07.				
7,5	35x72	.08.				
8	40x72	.09.	35x77	.56.		
9	40x72	.41.				
10	40x72	.10.				
12	40x98	.11.				
12,5	40x98	.12.				
13	40x98	.13.				
14	40x98	.14.				
15	40x98	.15.				
16	40x98	.16.				
17,5	45x98	.17.				
18	45x98	.18.				
20	45x98	.19.				
22	45x122	.55.				
22,5	45x122	.51.				
25	45x122	.20.	50x98	.52.		
30	50x122	.50.	55x98	.53.		
31,5	50x122	.22.				
35	50x122	.23.	55x98	.54.		
40	55x122	.24.				
45	55x132	.25.				
50	55x132	.26.				
55	60x132	.27.				
60	60x132	.28.				

Mechanical configuration

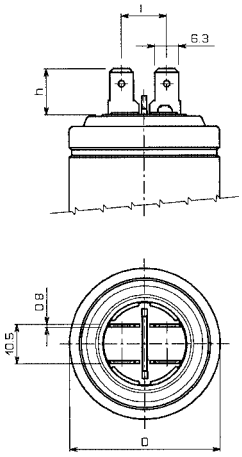

Fig. 1

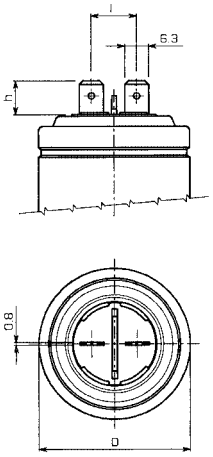

Fig. 2

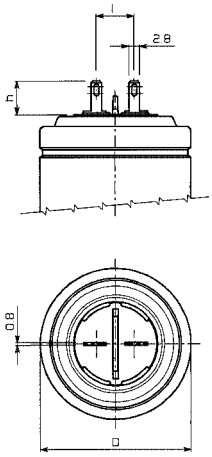

Fig. 3

D mm	fig. 1		fig. 2		fig. 3	
	h mm	l mm	h mm	l mm	h mm	l mm
25	–	–	–	–	9	9
30	–	–	9	12	9	9
35	11,7	11,3	9	12	9	10
40	12,2	12	10	16	9	10
45	12,2	12	9	12	9	10
50	12,2	12	9	12	9	10
55	12,2	12	9	12	9	10
60	12	20,5	8,9	15,5	–	–

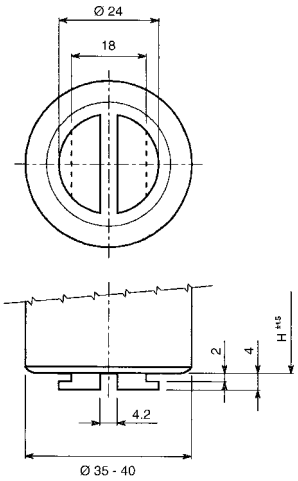

Fig. 4

Quick mounting slider for dia 35÷40 mm only (on request)

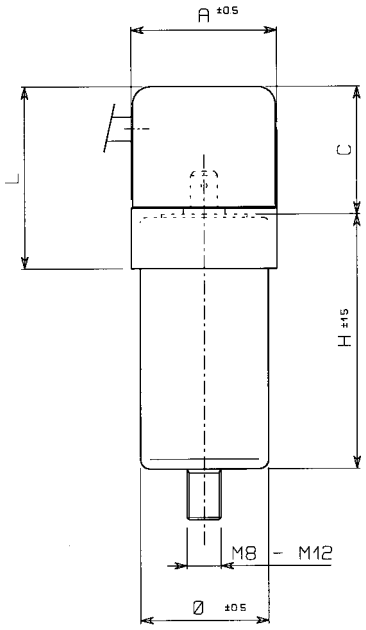

Fig. 5

Plastic cap - IP55 with twin cable.

Ø	A	C	L	*Part numbetr*
30	34,5	32	45,5	316.23.1030
35	39	32	52	316.23.1020
40	44	32	58	316.23.1040
45	49	32	58	316.23.1050

Accessories kk

Fig.	*Description*		*Series* 4.16.27/.25/.33/.26	
			without stud	*with stud*
1	*Terminals*	6,3 mm *double tag*	60	64
2	*Terminals*	6,3 mm *single tag*	28	29
3	*Terminals*	*2.8 plug in*	00	40
Ø25-30-40-45-50 *M8 stud*				
Ø 55-60 *M12 stud*				

TECHNICAL CHARACTERISTIC

Capacitance tolerance	*: ± 5%*
Working frequency	*: 50/60 Hz*
Individual test voltage	*: Between terminals: 2.15 Vn for 2 sec.; between terminals and case: 3kV for 2 sec.*
Dissipation factor tan δ	*: ≤ 20.10⁻⁴ @ 20°C V=Vn, 50 Hz*
Protection	*Aluminium case with plastic self extinguishing sealing cover, according to UL 94 Standard, Grade V2*
Terminals	*: Faston terminals 6.3 mm single, double 2.8 mm plug-in. Twin cable*
Protection degree	*: With terminals: IP00*
Cover	*: Ball pressure test (IEC 309-1): 125°C Glow wire test (IEC 695-2-1): 960°C Tracking resistance (IEC 309-1): ≥ 250V*
Threaded fixing bolt	*: Max screwing torque: M8 = 5 N m; M12 = 12 N m*
Safety device	*: overpressure (Fig. 6)*

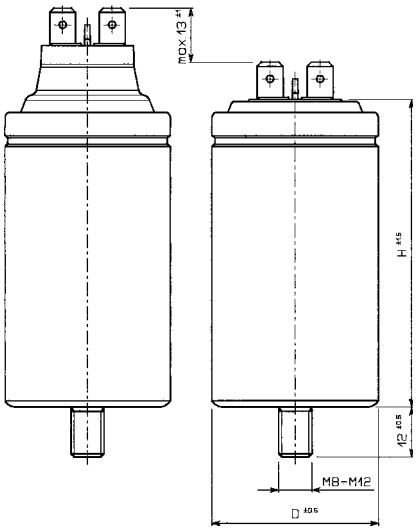

Fig. 5

Operation of the overpressure safety device
In order to ensure proper device operation, when the capacitor is installed, a clearance of at least 10 mm must be left above terminals.

This protection is provided by a special construction technology (patented) which breaks both the connections in case of breakdown, without affecting case insulation, preventing the capacitor from explodind or burning.
In case of permanent short-circuit, the current causes the dieletric to decompose, forming gas: the resulting pressure pushes up the part of the lid where the terminals are mounted, thus breaking the internal connections and stopping the current flow. (Fig. 6)
The device is designed in different sizes for each size of capacitor for the most effective, fastest intervention with both high and low short-circuit currents (up to 10.000 A).
In order to ensure proper operation of the device when the capacitor are installed, an empty space of at least 10 mm must be left above the terminals.
Because the new petented safety device is acting in the central part of the plastic deck only (see Fig. 5), it is possible to fix the capacitor with the system in use in the U.S.A. (Dog-house Clamps).

Single phase motor starting electrolytic capacitors series 4.12.80

Electrolytic capacitors are normally employed in single-phase induction motors in order to increase the value of their starting torque.
It is necessary that such starting should take place in a fraction of a second or at the most in a few seconds and with the contribution of an high reactive power.
Because of its reduced size, high capacitance value, the electrolytic capacitor is the suitable capacitor for this type of application.
Of course, once the motor has been started, the capacitor must be disconnected from the circuit.
The capacitive element is made of aluminium foils «treated» and separated by a leaf of impregnated paper as the electrolyte. Cases moulded in thermoplastic material, terminals tinned soldering and flat plug type.

Series 4.12.80

Standard duty series for general application

Capacitance µF	110V ~		125V ~		165V ~		220V ~		250V ~		280V ~		330V ~	
C min *C max* Cn. (Toll.)	Dim.	*Part number* 4.12.80.y.xxx	Dim.	*Part number* 4.12.80.y.xxx	Dim.	*Part number* 4.12.80.y.xxx	Dim.	*Part number* 4.12.80.y.xxx	Dim.	*Part number* 4.12.80.y.xxx	Dim.	*Part number* 4.12.80.y.xxx	Dim.	*Part number* 4.12.80.y.xxx
21÷25	A	4.12.80.y.201	A	4.12.80.y.251	A	4.12.80.y.301	A	4.12.80.y.351	A	4.12.80.y.401	A	4.12.80.y.501	A	4.12.80.y.451
25÷30	»	.202	»	.252	»	.302	»	.352	»	.402	»	.502	»	.452
30÷36	»	.203	»	.253	»	.303	»	.353	»	.403	»	.503	»	.453
36÷43	»	.204	»	.254	»	.304	»	.354	»	.404	»	.504	»	.464
43÷52	»	.205	»	.255	»	.305	»	.355	»	.405	»	.505	»	.472
47÷56	»	.206	»	.256	»	.306	»	.356	»	.406	»	.506	B	.456
53÷64	»	.207	»	.257	»	.307	»	.357	»	.418	»	.523	»	.457
64÷77	»	.208	»	.258	»	.308	»	.370	»	.427	B	.508	»	.458
72÷86	»	.209	»	.259	»	.309	»	.376	B	.409	»	.509	»	.459
88÷106	»	.210	»	.260	»	.310	B	.360	»	.410	»	.510	»	.465
108÷130	»	.211	»	.261	»	.311	»	.361	»	.411	»	.518	C	.461
124÷149	»	.212	»	.262	»	.334	»	.362	»	.419	»	.533	»	.462
130÷156	»	.213	»	.263	»	.335	»	.371	»	.420	»	.534	»	.463
145÷174	»	.214	»	.264	»	.336	»	.372	»	.421	»	.535	»	.469
161÷193	»	.215	»	.265	B	.315	»	.373	»	.422	C	.515	»	.468
189÷227	»	.216	»	.266	»	.316	»	.377	»	.424	»	.520		
216÷260	»	.217	»	.267	»	.317	»	.378	C	.417				
233÷280	»	.218	»	.268	»	.318	C	.368						
243÷292	»	.219	»	.275	»	.319	»	.369						
270÷324	»	.227	B	.270	»	.337	»	.375						
324÷389	B	.221	»	.271	»	.338								
340÷408	»	.222	»	.272	»	.339								
378÷454	»	.223	»	.273	»	.340								
400÷480	»	.224	»	.274	C	.333								
430÷516	»	.225	»	.276										
460÷552	»	.226	»	.284										
550÷650	»	.228	»	.285										

Heavy duty series for industrial applications

VDE

Approved

560-8

Capacitance	250 V ~		330 V ~	
µF	DIM.	*Part number* 4.12.80.y.xxx	DIM.	*Part number* 4.12.80.y.xxx
24 ± 10%	A	4.12.80.y.107	A	4.12.80.y.121
48 ± 10%	»	.112	»	.133
56 ± 10%	»	.109	B	.101
59 ± 10%	»	.110	»	.102
71 ± 10%	»	.105	»	.124
80 ± 10%	B	.114	»	.126
98 ± 10%	»	.106	»	.134
120 ± 10%			C	.165
140 ± 10%	»	.117	»	.120
160 ± 10%	»	.118		

Dimensions
A = 36,5 x 68,5 mm
B = 45,5 x 84 mm
C = 52 x 105 mm

TECHNICAL CHARACTERISTIC

Capacitance tolerance	*: ± 10%*
Protection	*: Moulded thermoplastic self-extinguishing*
Terminals	*: Tinned soldering or 6.3 mm double tags*
Construction	*: Etched aluminium foil*
Applications	*: Starting of single phase motor*
Operating temperature range	*: –10°C + 55°C* *VDE: –10°C + 60°C*
Dissipation factor	*: Typical 6% - Maximum 10%*
Duty cycle	*: 3'/1.7% :3s ON/3 min OFF (N=20 hour application application time t=3": N.t = 60)*
Extension of duty cycle	*: These capacitors withstand heavier duty cycles than the rated one. For the below temperature operating, the product N.t can be multiplied by the following factors:*

Room temperature	*55°C*	*45°C*	*35°C*	*25°C*	*15°C*
Factor	*1*	*1.25*	*1.5*	*1.75*	*2*

Standard Models

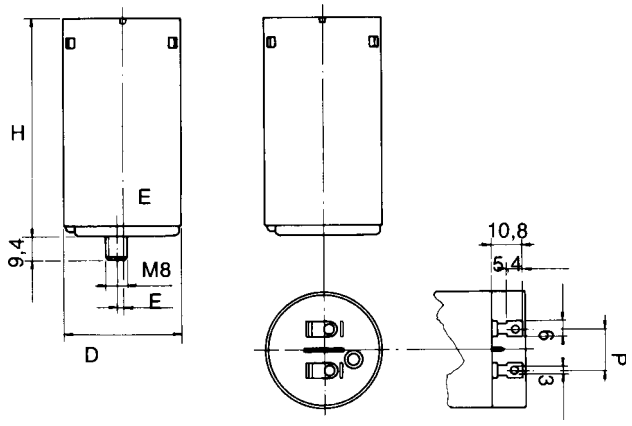

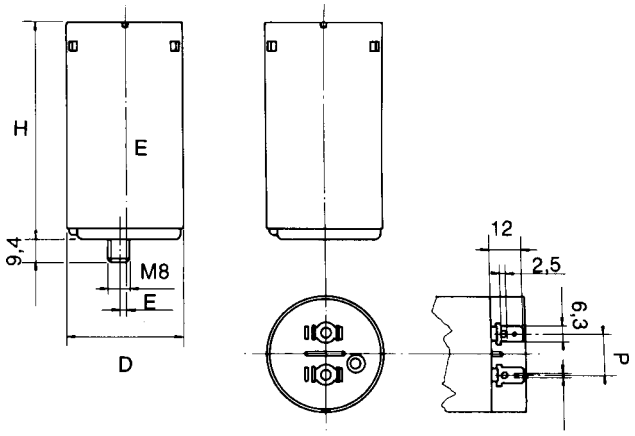

D cond	**P**	**H**	**E**
36,5	13	68,5	1,75
45,5	16	84	2,55
52	16	105	5,55

Fig. 1 *Soldering terminals*

Fig. 2 *Double 6.3 mm terminals*

Accessories y

Fig.	*Description*	*Series* 4.12.80	
		Without stud	*With stud*
1	*Soldering terminals*	0	1
2	*6,3 mm. double tag*	2	3

Resistor 15÷39 Kohm, 1 watt is mounted on request

Mounting bracket

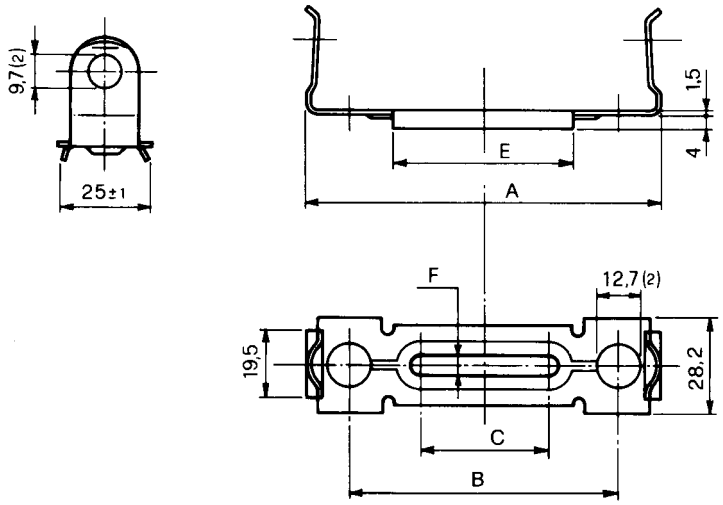

Case D x H (mm)	*Mounting bracket*					
	A	B	C	F	E	*Part number*
36.5 x 68.5	88.2	31.6	22.3	2.5	37.3	3.12.36.0750
45.5 x 84	104.4	39.5	38.1	5.9	53.2	.0020
52 x 105	129.4	52.1	38.1	5.9	53.2	.0010

Protective cap

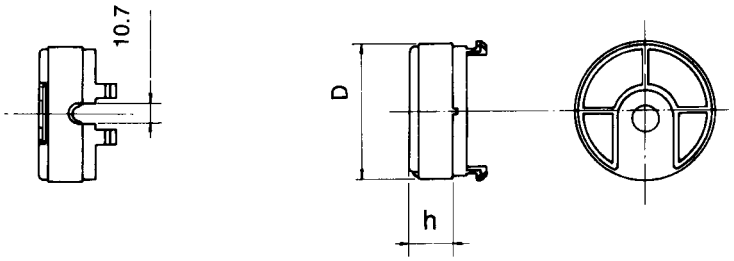

D mm	h mm	*Cap*
		Part number
36,5	13,7	3.12.11.0830
45,5	14,6	.0840
52	18,6	.0850

Packages

Series 4.16.18/.10/.17/.15

Plastic case

D x H (mm) *Capacitor's dimensions*	*With tags*	D*	*With leads*		*With cables*	
			L < 200 mm.	D*	L ≥ 200 mm.	D*
25 x 49	250 pz.	A	250 pz.	A	200 pz.	A
25 x 55	250 pz.	»	200 pz.	»	125 pz.	B
28 x 55	250 pz.	»	200 pz.	»	125 pz.	»
30 x 56.5	200 pz.	»	200 pz.	»	125 pz.	»
30 x 70	125 pz.	B	125 pz.	B	100 pz.	A
32 x 55	200 pz.	A	125 pz.	»	100 pz.	»
36 x 58	125 pz.	»	125 pz.	A	100 pz.	»
36 x 70	100 pz.	»	100 pz.	»	50 pz.	B
40 x 70	100 pz.	»	50 pz.	B	50 pz.	A
40 x 92	50 pz.	B	50 pz.	A	50 pz.	»
45 x 68	50 pz.	»	50 pz.	»	50 pz.	»
45 x 92	50 pz.	A	25 pz.	B	25 pz.	»
45 x 117	25 pz.	B	25 pz.	»	25 pz.	B
50 x 92	25 pz.	»	25 pz.	»	25 pz.	»
50 x 117	25 pz.	A	25 pz.	A	25 pz.	A
55 x 120	25 pz.	»	25 pz.	»	25 pz.	»
60 x 120	20 pz.	»	20 pz.	»	20 pz.	»
Peso / *Weight*	8 ÷ 9 Kg.		6,5 ÷ 8 Kg.		7 ÷ 8 Kg.	
All of the capacitors dimensions are packet in bulk.						

Series 4.16.27/.25/.33/.26

Metallic case

Capacitor's dimensions D x H (mm)	*With tags*	D*
25 x 53	250	A
25 x 60	250	A
25 x 72	200	B
30 x 60	200	A
30 x 72	200	A
35 x 60	125	B
35 x 72	100	B
35 x 77	100	B
40 x 72	100	A
40 x 98	50	B
45 x 98	50	A
45 x 122	50	A
45 x 132	25	B
50 x 122	25	B
55 x 122	25	A
55 x 132	25	A
60 x 98	25	A
60 x 132	25	A

Series 4.12.80

D x H (mm) *Capacitor's dimensions*	36,5 x 68,5	45,5 x 84	52 x 105	Peso / *Weight*
With tags	100 pz.	50 pz.	50 pz.	6 ÷ 7 Kg.
*Dimensions box **	B	A	A	

* *Standard box dimensions:* A = mm 195 x 390 x 255 B = mm 195 x 390 x 200