Drawings to Accompany the Building Guidelines

Section B: Concrete Construction

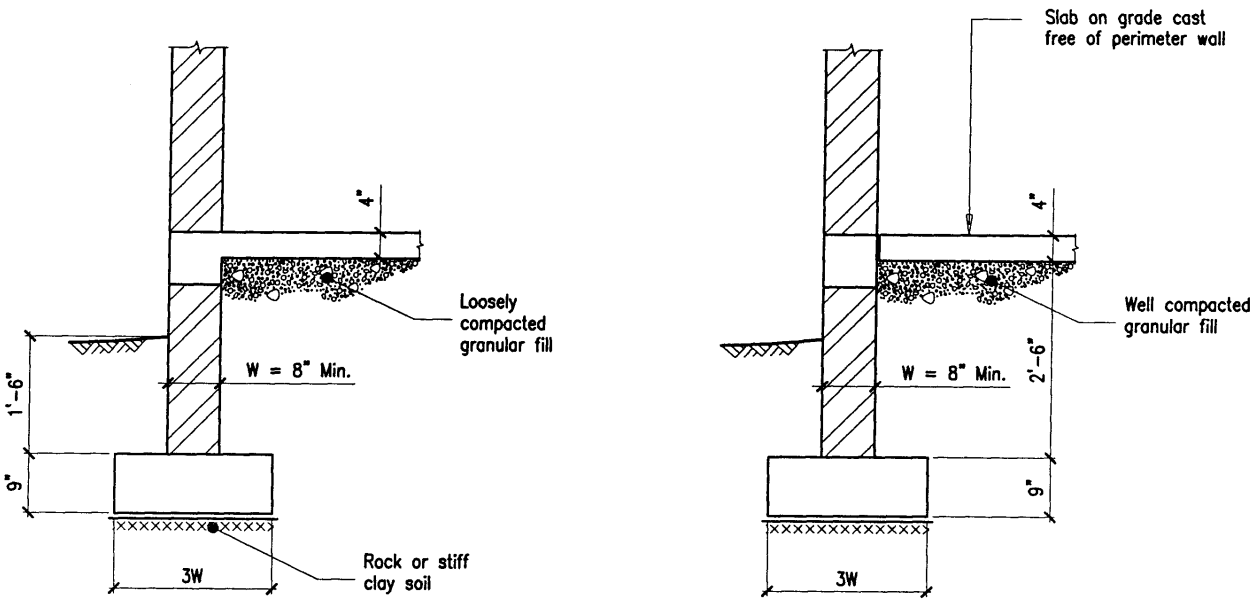

***Figure B-1*: Permissible Arrangement of Strip Footings**

All exterior walls and interior load-bearing walls should be supported on reinforced concrete strip footings. Interior walls may be supported by thickening the slab under the wall and suitably reinforcing it. The foundations should generally be located on a layer of soil or rock with good bearing characteristics. Such soils would include dense sands, marl, other granular materials and stiff clays.

The foundation should be cast not less than 1’ 6" to 2’ 0" below ground, its thickness not less than 9" and its width not less than 24" or a minimum of three times the width of the wall immediately supported by it. Where clays must be used as the foundation bearing material, the width of the footing should be increased to a minimum of 2’ 6".

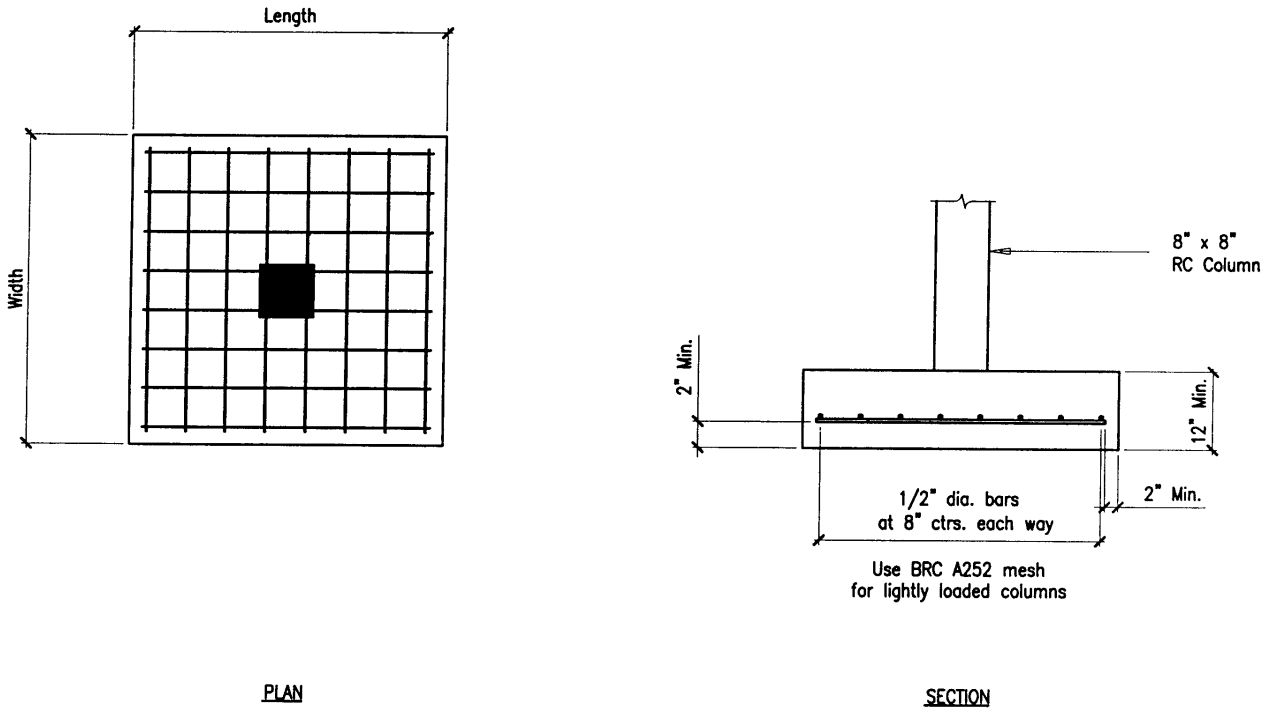

***Figure B-2*: Typical Spread Footing Detail**

When separate reinforced concrete columns or concrete block columns are used they should be supported by square footings not less than 2'-0" square and 12" thick. For columns footings, the minimum reinforcement should be ½" diameter bars at 6" centres in both directions forming a 6" mesh.

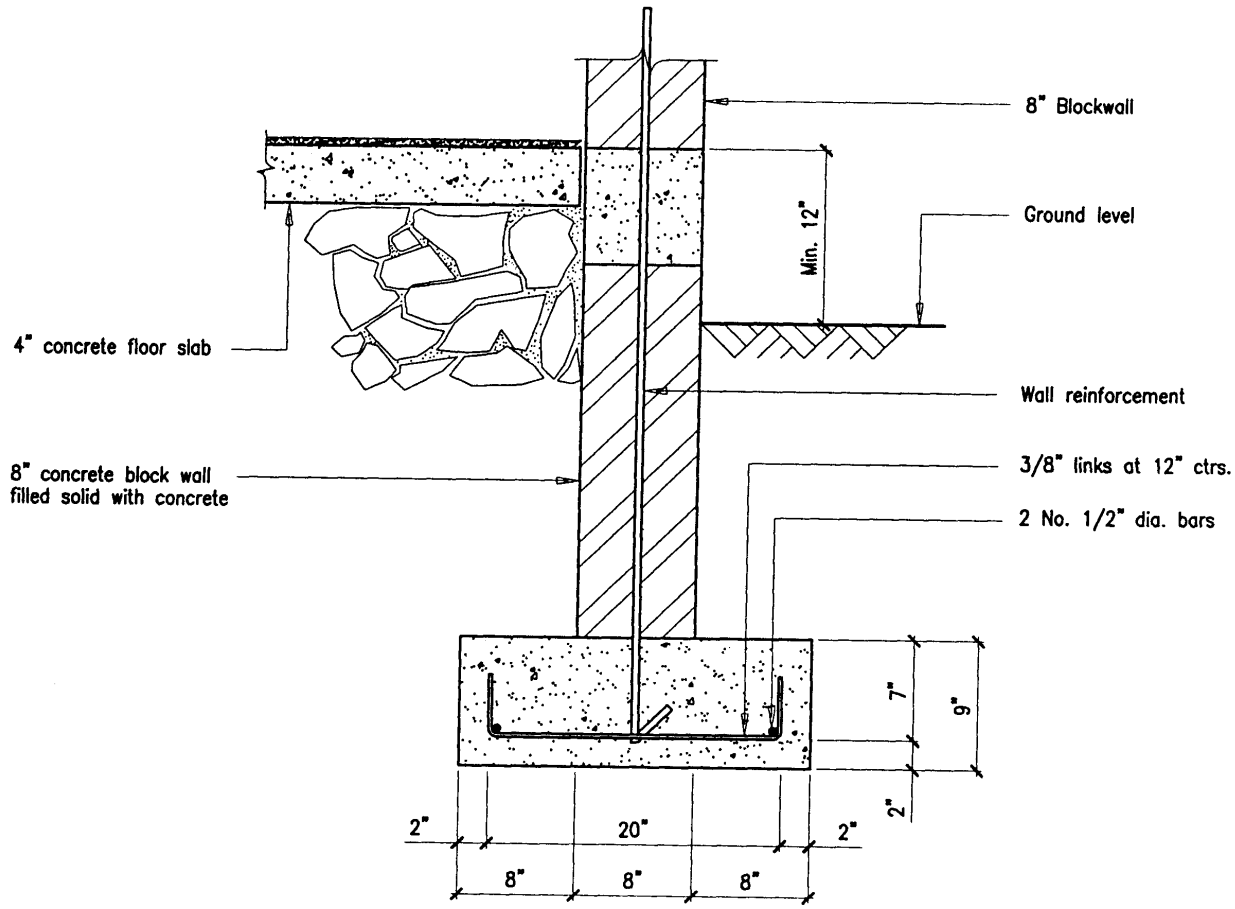

***Figure B-3*: Reinforcement of Strip Footings**

Reinforcement in the foundation is needed to ensure the continuity of the structure. This is particularly important in cases of bad ground or where the building may be subjected to earthquake forces. The reinforcement is assumed to be deformed high yield steel bars which are commonly supplied in the OECS. For strip footings, the minimum reinforcement should consist of 2 No. 4 (½") bars placed longitudinally and ½" diameter bars placed transversely at 12" centres.

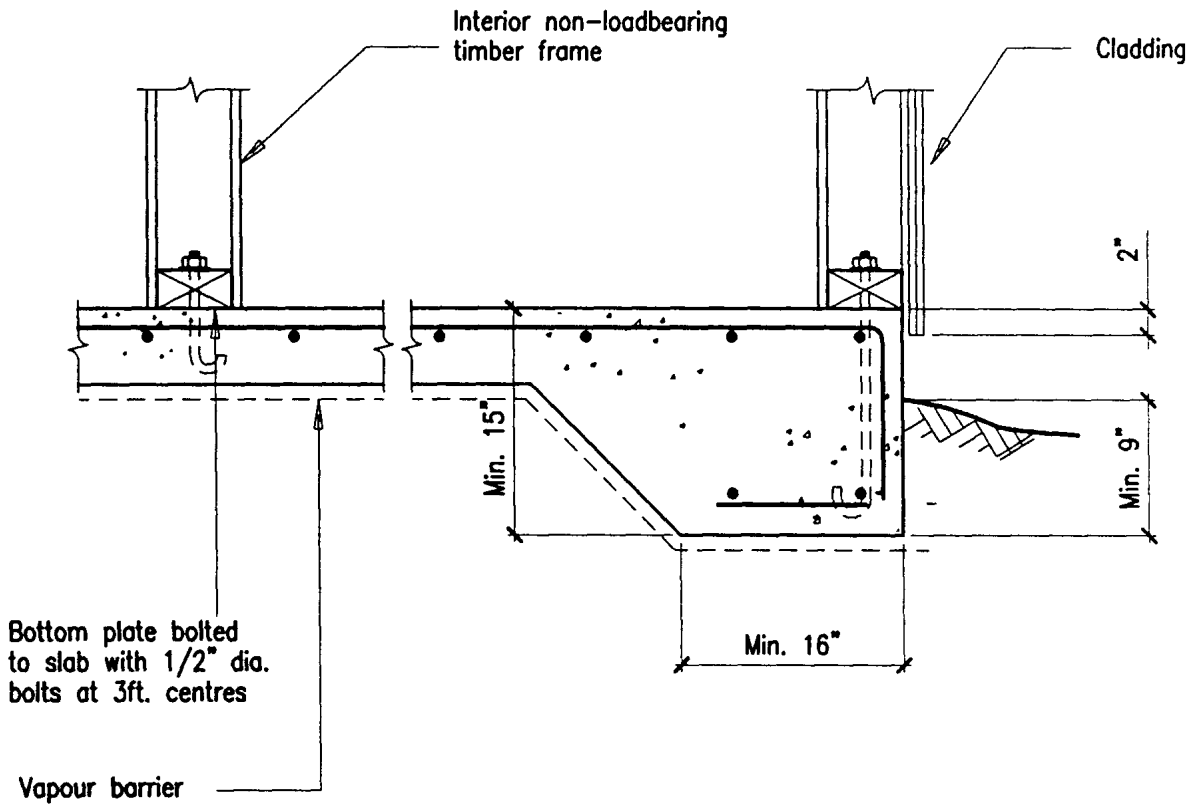

Figure B-4: **Concrete Floor in Timber Construction**

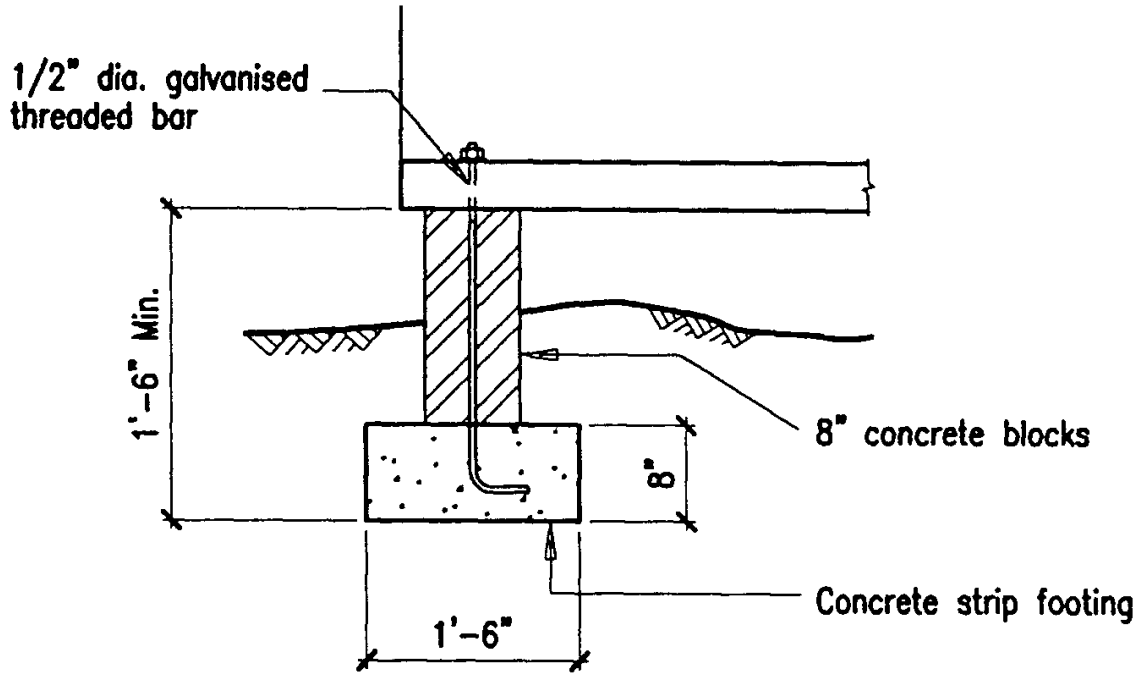

Figure B-5: **Concrete Strip Footing and Concrete Base with Timber Construction**

An acceptable arrangement for a foundation of a small timber building with a concrete or wood floor is shown in these figures. This construction is suitable in reasonably stiff soils or marl. Where the building will be on rock, the thickness of the footing may be reduced, but timber buildings are very light and can easily be blown off of their foundations. Therefore the building must be securely bolted to the concrete footing, and the footings must be heavy enough to prevent uplift.

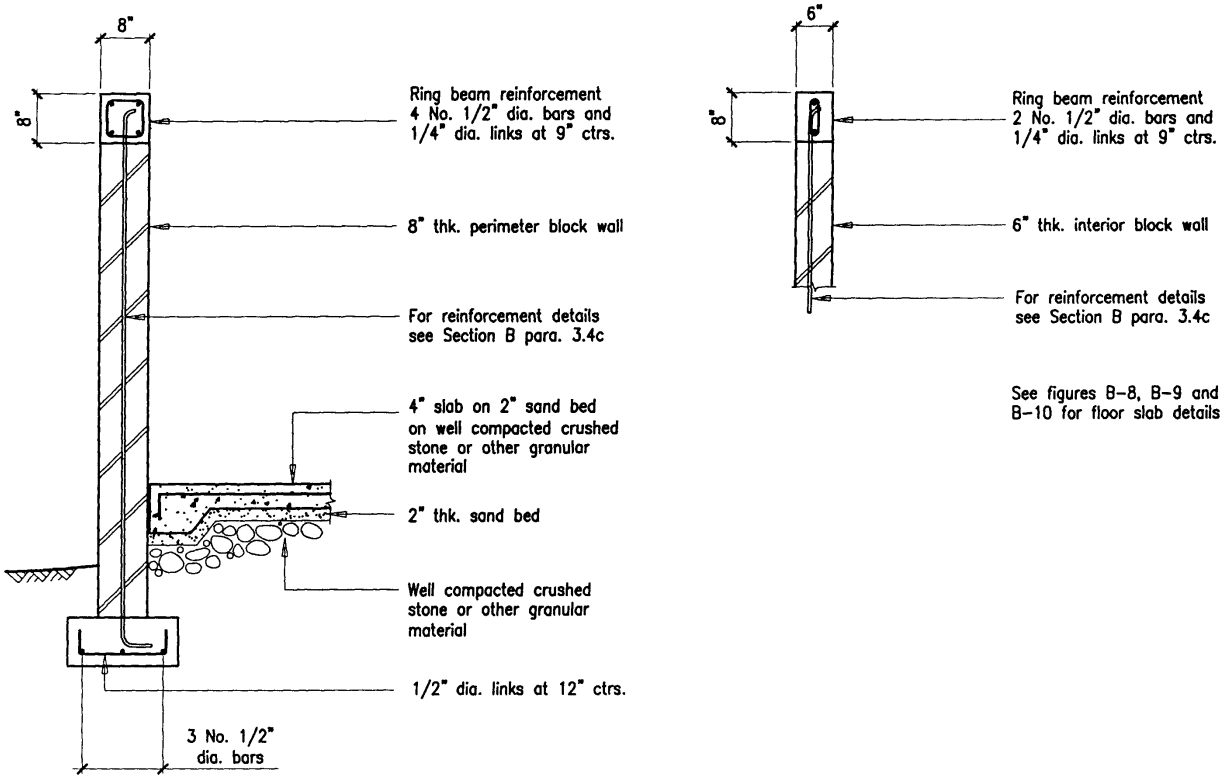

***Figure B-6*: Typical Block Masonry Details**

Concrete blocks used in walls should be sound and free from cracks and their edges should be straight and true. The nominal width of blocks for exterior walls and load bearing interior walls should be a minimum of 6 inches and the face shell a minimum thickness of 1". It is better to construct exterior walls of 8" thick concrete block. Non-load bearing partitions may be constructed using blocks with a nominal thickness of 4" or 6". Blockwork walls should be reinforced both vertically and horizontally; this is to resist hurricane and earthquake loads. It is normal practice in most of the OECS to use concrete columns at all corners and intersections. Door and window jambs must be reinforced.

The recommended minimum reinforcement for concrete block construction is as follows:

i. 4-½" diameter bars at corners vertically.
ii. 2-½" diameter bars at junctions vertically.
iii. 2-½" diameter bars at jambs of doors and windows
iv. for horizontal wall reinforcement use "Dur-o-waL (or similar) or ¼" bars every other course as follows:

4" blocks 1 bar
6" blocks 2 bars
8" blocks 2 bars

v. For vertical wall reinforcement use ½" bars spaced as follows:

4" blocks 32
6" blocks 24
8" blocks 16

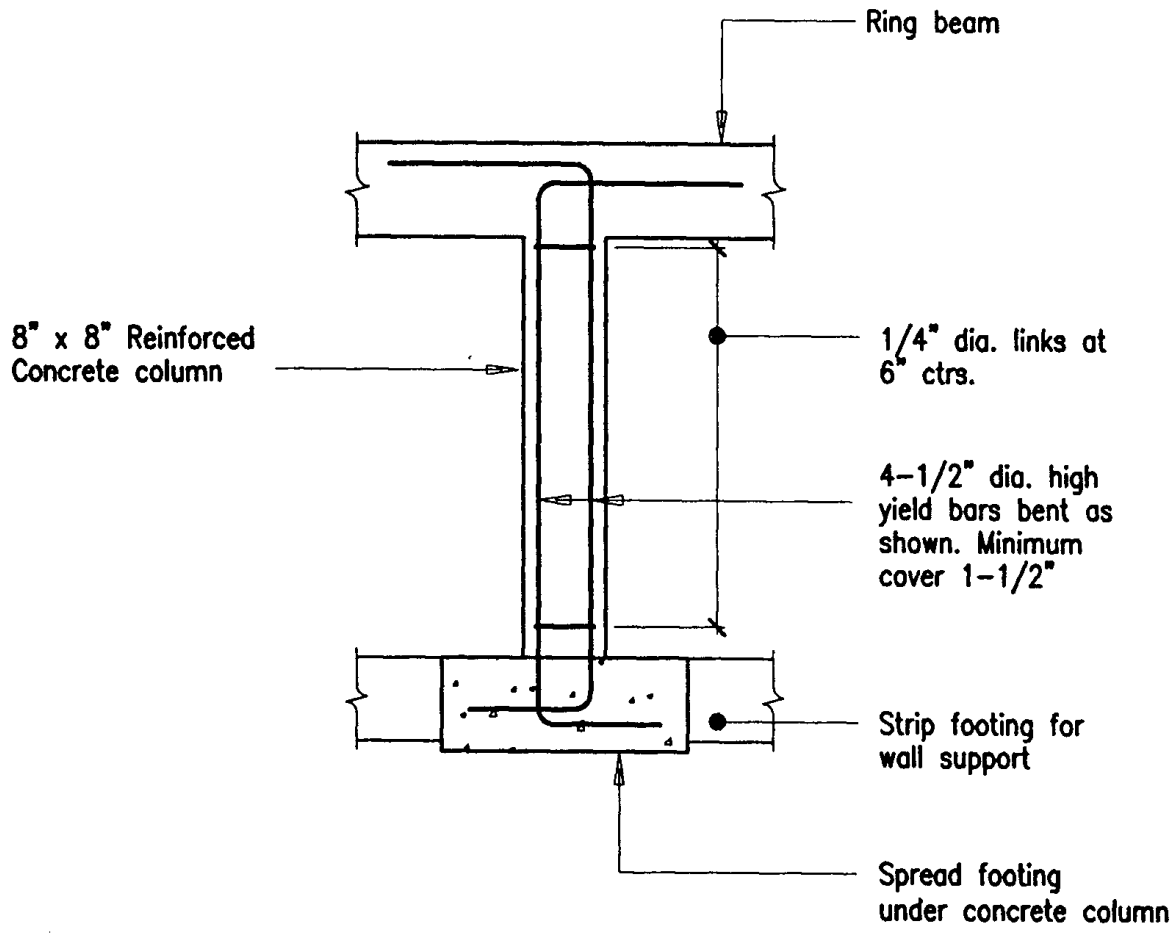

***Figure B-7*: Concrete Column Detail**

Columns should have minimum dimensions of 8" x 8" and may be formed by formwork on four sides or formwork on two sides with blockwork on the other two. The minimum column reinforcement should be 4- ½ diameter bars with ¼" stirrups at 6" centres. A filled core column or poured concrete column should be placed full height to the belt course (ring beam) at each door jamb.

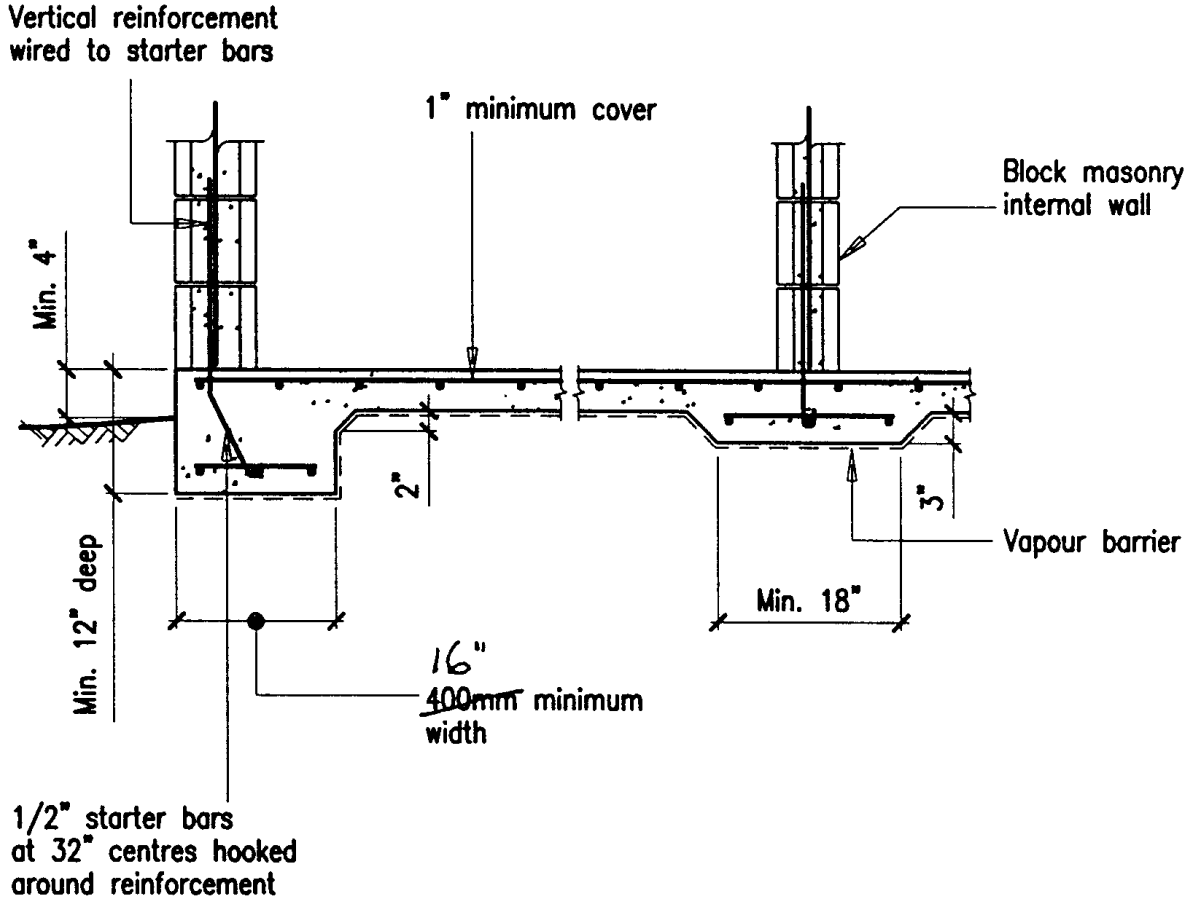

***Figure B-8*: Alternate Footing Arrangements for Block Masonry**

This reinforced concrete footing is constructed monolithically with the floor slab. It consists of a series of slab thickenings under the walls with a minimum 12"deep downstand on the perimeter. The footing is placed entirely on well compacted granular material.

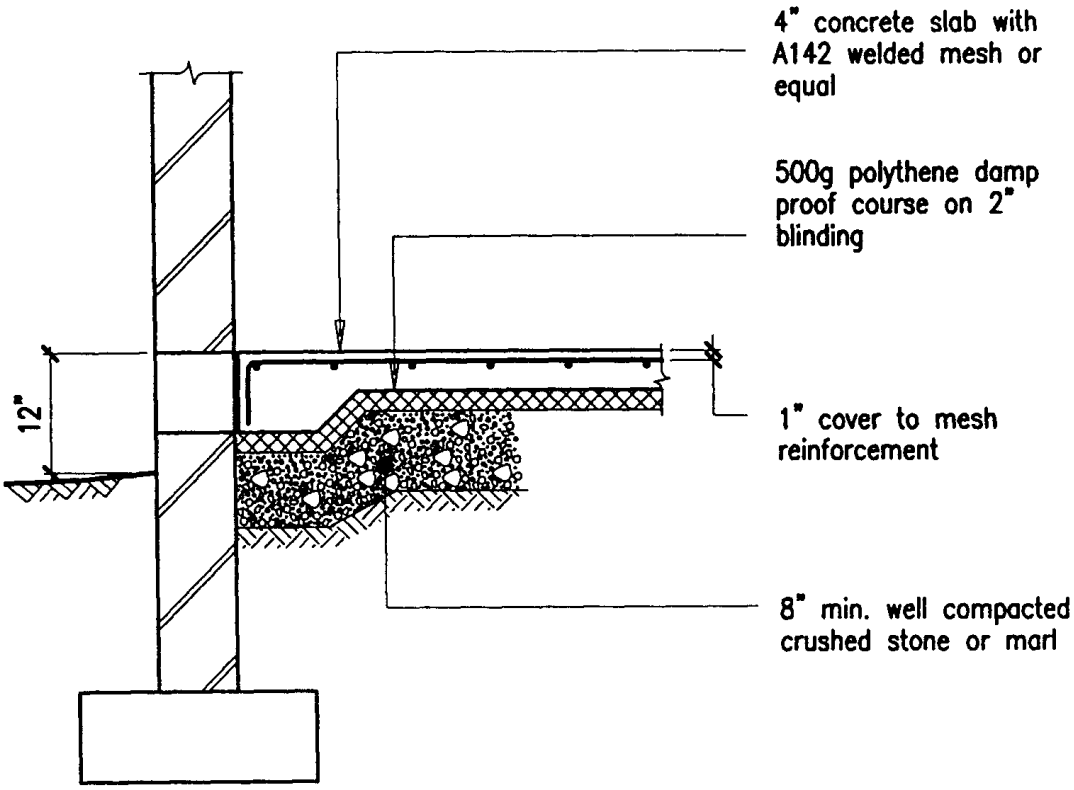

Figure B-9: Floor Slab Detail

The reinforced concrete floor slab is kept free of the perimeter walls. The mesh reinforcement in the slab is placed in the top with 1" covers. The slab is constructed on well compacted granular fill, crushed stone or marl.

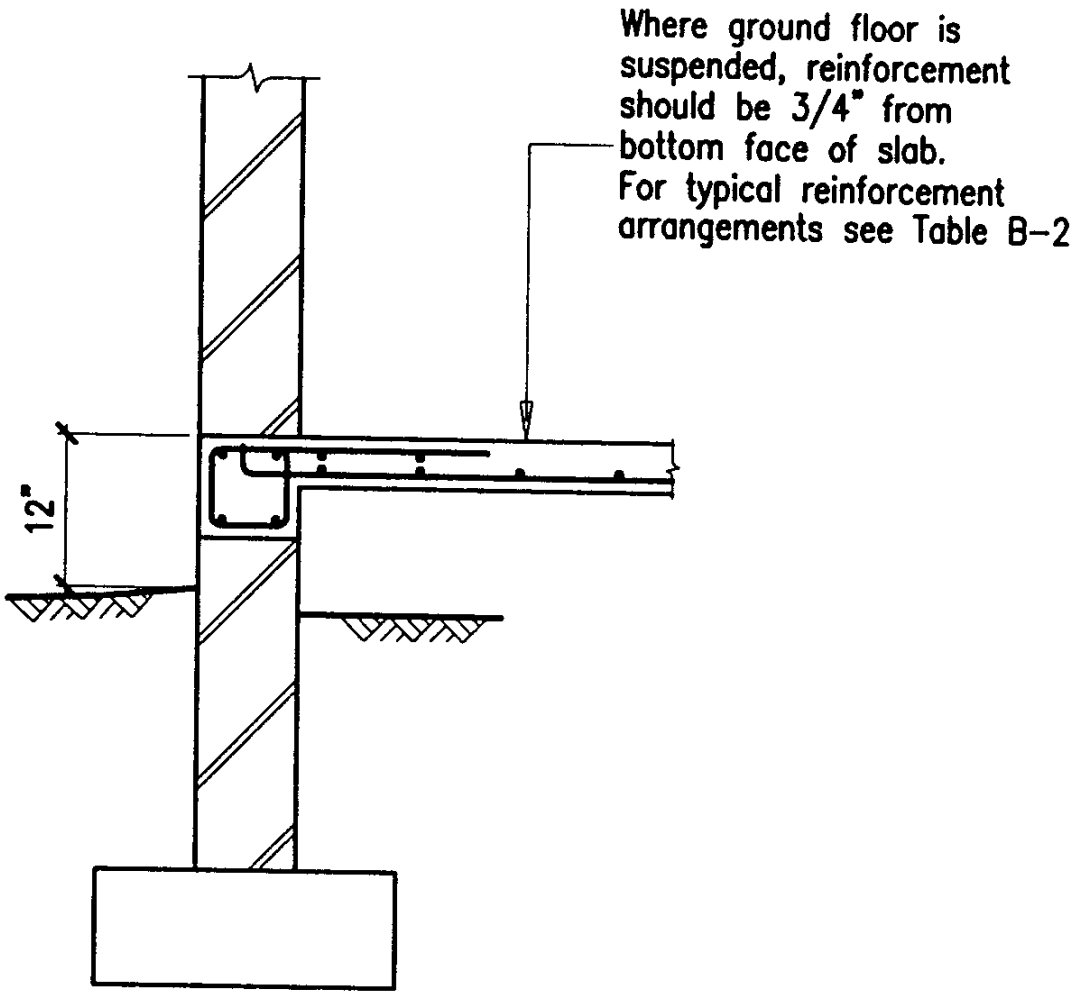

***Figure B-10*: Alternative Floor Slab Detail**

The suspended reinforced concrete slab is tied into the external capping beam at floor level. The top (steel) reinforcement is important. The main reinforcement should be of the order of ½" diameter at 9" centres, and the distribution steel 3/8" diameter at 12" centres.

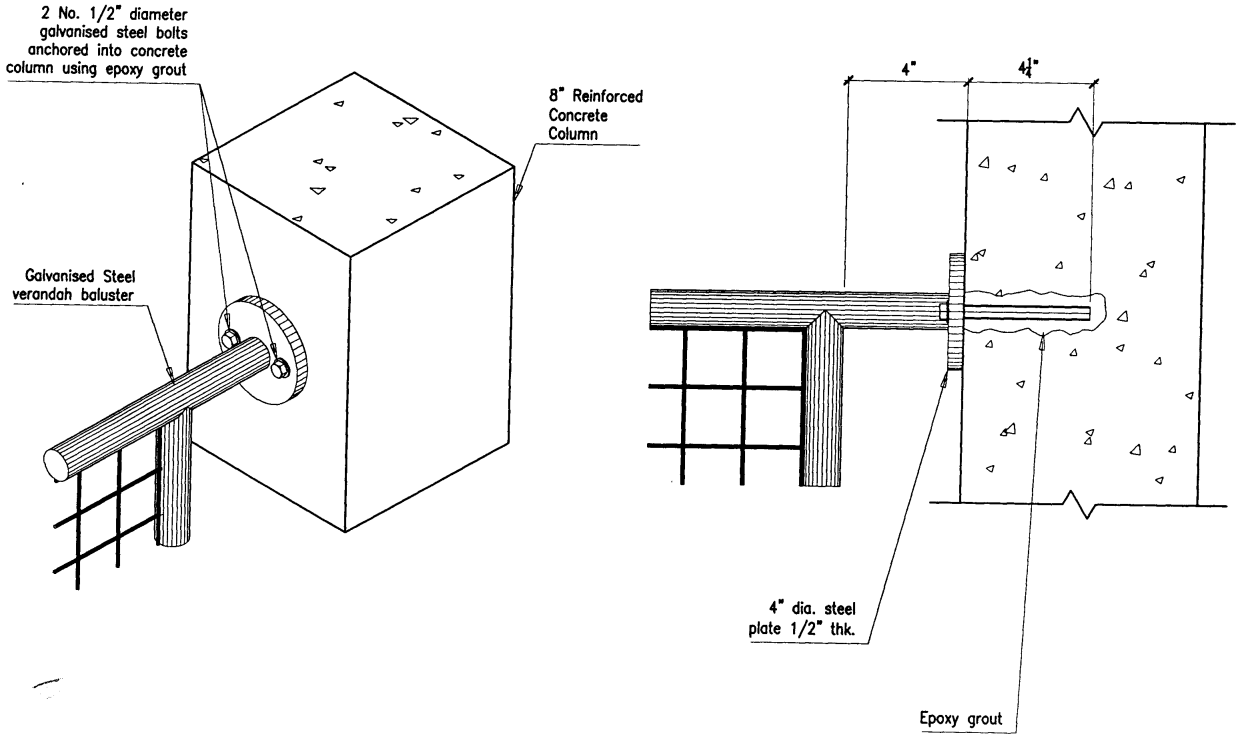

***Figure B-11*: Fixing Detail for Vernadah Rail to Column**

It is important that the rails be adequately fixed into the side column. At a minimum the bolts should be galvanised to prevent corrosion. Epoxy grout or chemical anchors are recommmended for fixing the baluster into the concrete column.

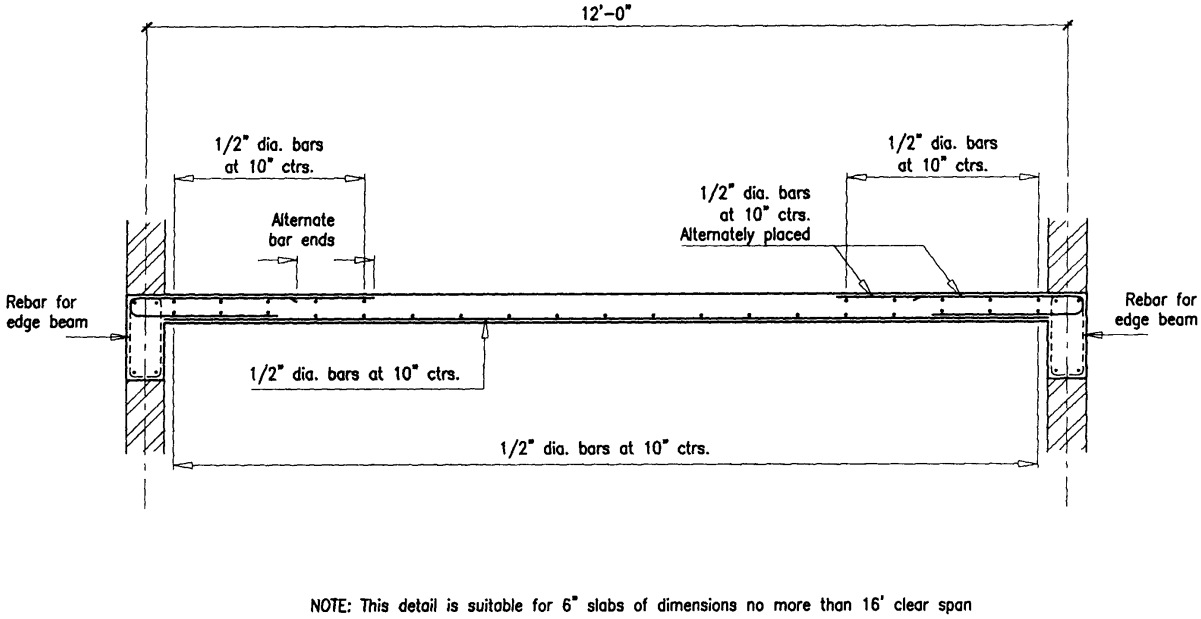

***Figure B-12*: Reinforcement Arrangement for Suspended Slabs**

The reinforcement should be bent and fixed by knowledgeable workmen. Care must be taken to maintain the top steel in the top with adequate cover.

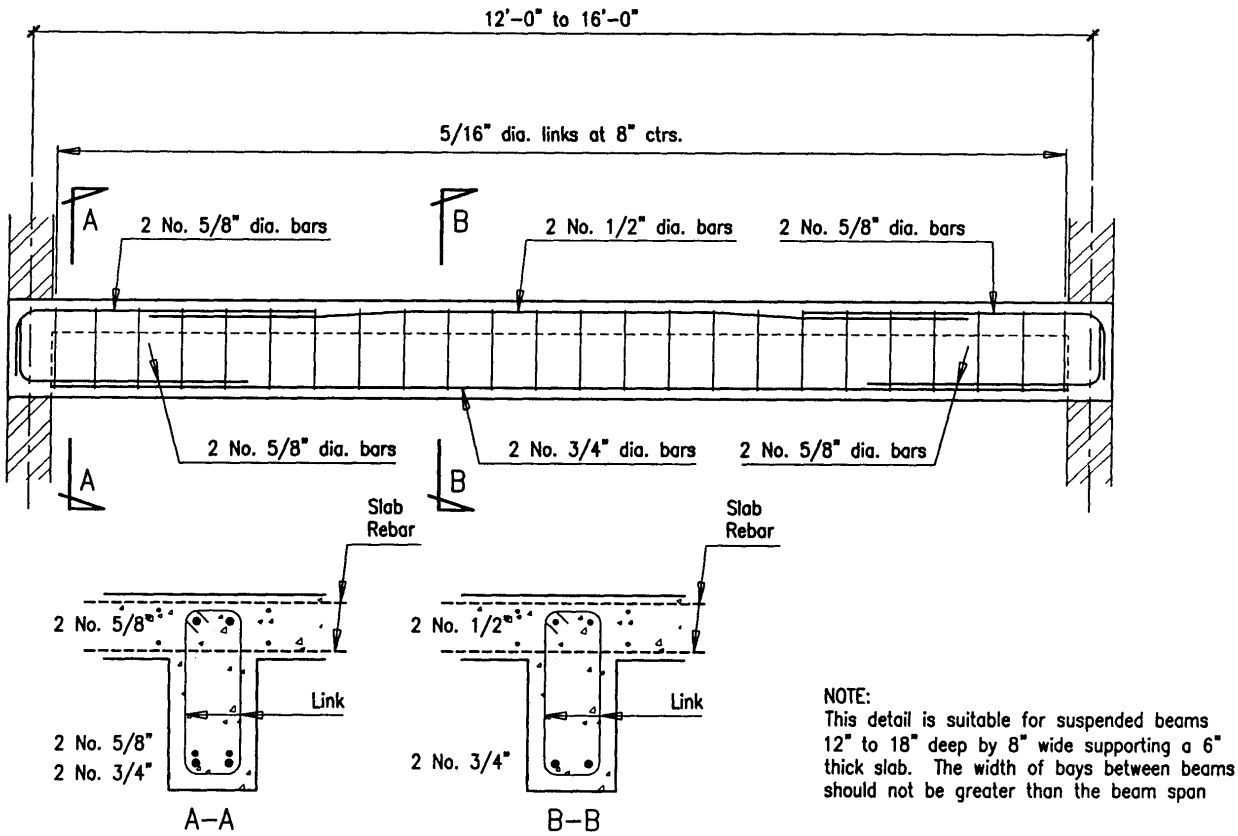

***Figure B-13*: Reinforcement Arrangement for Suspended Beams**

The reinforcement should be bent and fixed by knowledgeable workmen. Care must be taken to maintain the top steel in the top with adequate cover.

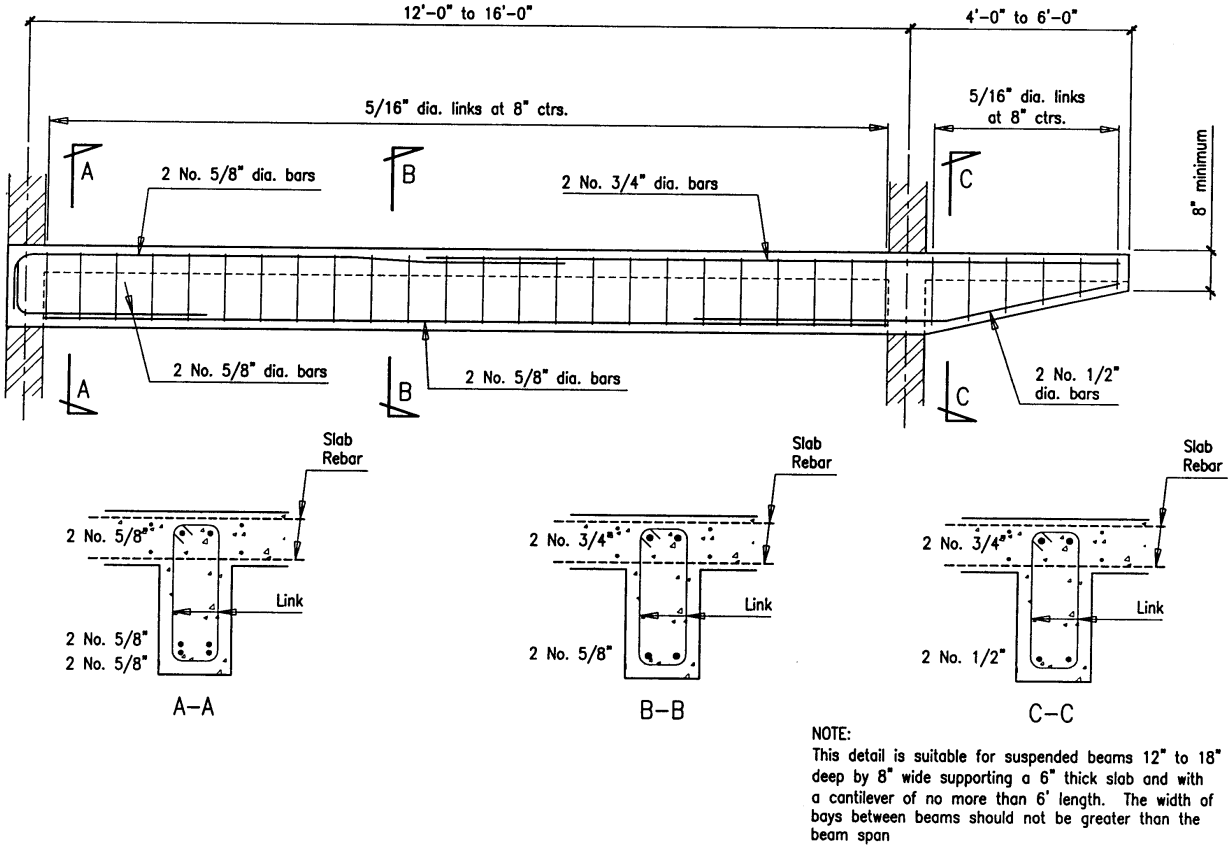

***Figure B-14*: Reinforcement Arrangement for Suspended Cantilever Beams**

The reinforcement should be bent and fixed by knowledgeable workmen. Care must be taken to maintain the top steel in the top with adequate cover.

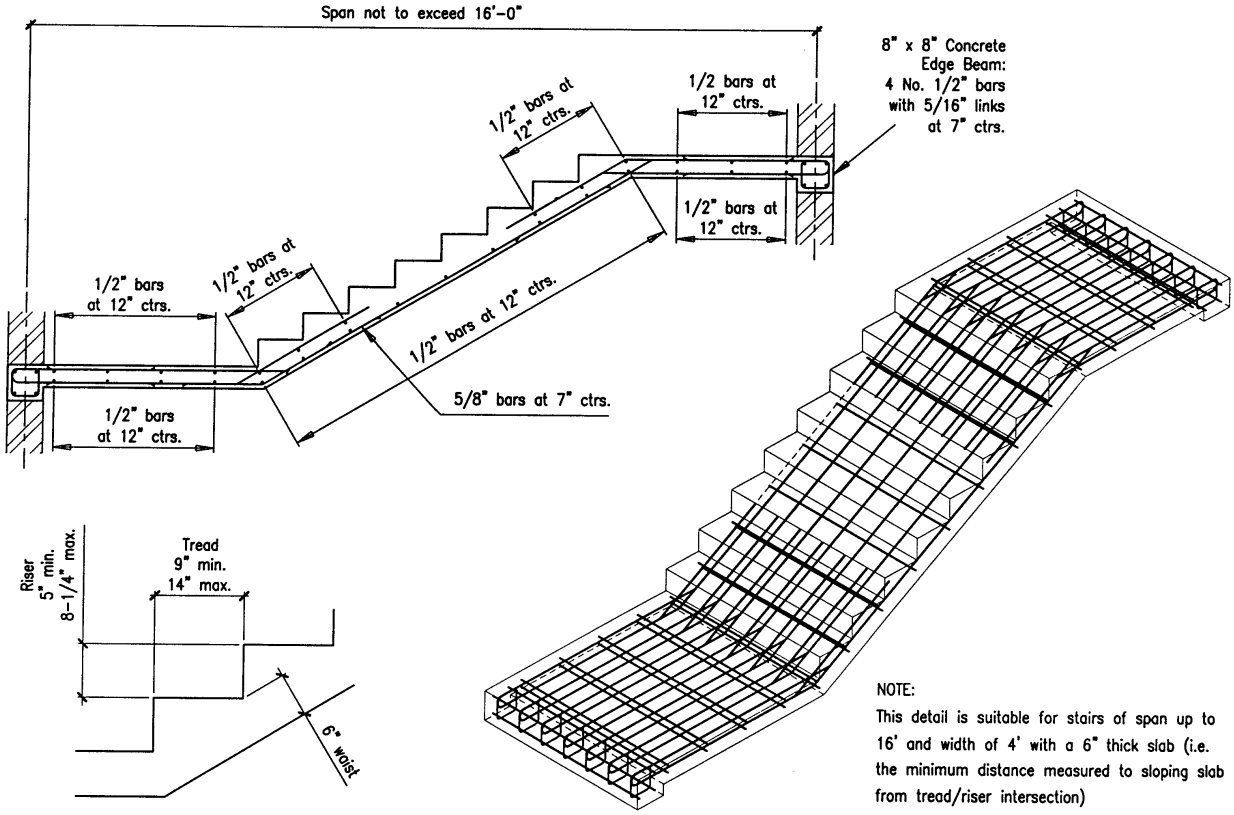

***Figure B-15*: Reinforcement Arrangement for Suspended Stairs**